Scan to see the online manual.

OWNER'S MANUAL

# WASHTOWER

Read this owner's manual thoroughly before operating the appliance and keep it handy for reference at all times.

**ENGLISH**

WKHC252H*A

MFL71983218
Rev.05_071626

www.lg.com

Copyright © 2023-2026 LG Electronics. All Rights Reserved

# TABLE OF CONTENTS


## 3 IMPORTANT SAFETY INSTRUCTIONS

3 READ ALL INSTRUCTIONS BEFORE USE
3 WARNING STATEMENTS
6 CAUTION STATEMENTS

## 8 PRODUCT OVERVIEW

8 Product Features

## 11 OPERATION-WASHER

11 Using the Washer
14 Adding Cleaning Products
17 Control Panel
20 Wash Cycles
23 Cycle Modifiers
23 Options and Extra Functions

## 25 OPERATION-DRYER

25 Using the Dryer
28 Control Panel
30 Dry Cycles
32 Cycle Modifiers
32 Options and Extra Functions

## 34 SMART FUNCTIONS

34 Using LG ThinQ Application
36 Smart Diagnosis™ Function

## 38 MAINTENANCE

38 Washer
44 Dryer

## 48 TROUBLESHOOTING

48 Washer
55 Dryer
60 Common

## 61 LIMITED WARRANTY

61 USA

# IMPORTANT SAFETY INSTRUCTIONS

## READ ALL INSTRUCTIONS BEFORE USE

### Safety Messages

**Your safety and the safety of others are very important.**

We have provided many important safety messages in this manual and on your appliance. Always read and follow all safety messages.

This is the safety alert symbol.

This symbol alerts you to potential hazards that can kill or injure you and others. All safety messages will follow the safety alert symbol and either the word WARNING or CAUTION.

These words mean:

**WARNING**

You may be killed or seriously injured if you do not follow instructions.

**CAUTION**

You may be injured or cause damage to the product if you do not follow instructions.

All safety messages will tell you what the potential hazard is, tell you how to reduce the chance of injury, and tell you what may happen if the instructions are not followed.

## WARNING STATEMENTS

**WARNING**

- To reduce the risk of explosion, fire, death, electric shock, scalding or injury to persons when using this product, follow basic precautions, including the following:

### Installation

- Adhere to all industry recommended safety procedures including the use of long-sleeved gloves and safety glasses.
- Never attempt to operate this appliance if it is damaged, malfunctioning, partially disassembled, or has missing or broken parts, including a damaged cord or plug.
- Before use, the appliance must be properly installed as described in this manual.
- To reduce the risk of severe injury or death, follow all installation instructions.
- Refer to the INSTALLATION INSTRUCTIONS for detailed grounding procedures. Installation instructions are packed with the appliance for the installer’s reference. If the appliance is moved to a new location, have it checked and reinstalled by qualified service personnel.
- When moving or installing the product in a different location, call two or more qualified service personnel for installation and service.
- Do not install the appliance in humid spaces.
- Store and install the appliance where it will not be exposed to temperatures below freezing or exposed to outdoor weather conditions.
- This appliance is not designed for maritime use or for mobile installations such as in RVs, trailers, or aircraft.
- Keep packing materials out of the reach of children. Packaging material can be dangerous for children. There is a risk of suffocation.

- Destroy the carton, plastic bag, and other packing materials after the appliance is unpacked. Children might use them for play. Cartons covered with rugs, bedspreads, or plastic sheets can become airtight chambers.
- The appliance must be installed and electrically grounded by qualified service personnel in accordance with local codes.
- When installing or moving the appliance, be careful not to pinch, crush, or damage the power cord.
- Connect to a properly rated, protected, and sized power circuit to avoid electrical overload.
- This appliance must be positioned near to an electrical power supply.
- Disconnect the power cord, house fuse or circuit breaker before installing or servicing the appliance.
- The power cord of this appliance is equipped with a 3-prong (grounding) plug which mates with a standard 3-prong (grounding) wall outlet to minimize the possibility of electric shock from this appliance.
- Do not, under any circumstances, cut or remove the third (ground) prong from the power cord.
- Use new hoses when connecting the appliance to the water supply. Do not reuse old hoses.
- Local ordinances may prohibit installation in a garage. Contact a local building inspector.
- Do not install near another heat source such as a stove, oven or heater.
- The appliance must not be supplied through an external switching device, such as a timer, or connected to a circuit that is regularly switched on and off by a utility.
- This is a single appliance and a single unit for sale, delivery and installation.
- Do not disassemble this appliance for use, as it can’t be installed in a side-by-side configuration.

## Grounding Instructions

- Improper connection of the equipment-grounding conductor can result in a risk of electric shock. Check with a qualified electrician or service personnel if you are in doubt whether the appliance is properly grounded. Do not modify the plug provided with the appliance; if it will not fit the outlet, have a proper outlet installed by a qualified electrician.
- The appliance must be grounded. In the event of a malfunction or breakdown, grounding will reduce the risk of electric shock by providing a path of least resistance for electric current. The appliance is equipped with a cord having an equipment-grounding conductor and a grounding plug. The plug must be plugged into an appropriate outlet that is installed and grounded in accordance with all local codes and ordinances.
- The appliance must be plugged into a properly grounded outlet. Electrical shock may result if the appliance is not properly grounded. Have the wall outlet and circuit checked by a qualified electrician to make sure the outlet is properly grounded. Failure to follow these instructions may create an electric shock hazard and/or a fire hazard.

## Operation

- Read all instructions before using the appliance and save these instructions.
- Use this appliance only for its intended purpose.
- If the product has been submerged in water, sitting in standing water, or waterlogged, do not come in contact with the product and immediately contact an LG Electronics Customer Information Center for instructions before resuming use.
- If you detect a strange sound, a chemical or burning smell, or smoke coming from the appliance, unplug it immediately, and contact an LG Electronics Customer Information Center.
- Do not reach into the appliance if the tub or drum, agitator, or any interior parts are moving. Before loading, unloading, or adding items, press **Start/Pause** and allow the tub or drum to coast to a complete stop before reaching inside.
- This appliance is not intended for use by persons (including children) with reduced physical, sensory or mental capabilities, or lack of experience and knowledge, unless they have been given supervision or instruction concerning the use of the appliance by a person responsible for their safety.

- Do not allow children or pets to play on, in or with the appliance. Close supervision is necessary when the appliance is used near children or pets.
- Keep laundry products out of children’s reach. To prevent injury to persons, observe all warnings on product labels.
- Repair or immediately replace all power cords that have become frayed or otherwise damaged. Do not use a cord that shows cracks or abrasion damage along its length or at either end.
- Never unplug the appliance by pulling on the power cord. Always grip the plug firmly and pull straight out from the outlet.
- Do not use an extension cord or adapter with this appliance.
- Do not grasp the power cord or touch the appliance controls with wet hands.
- Do not modify or extend the power cord.
- If the electrical supply cord is damaged, it must only be replaced by the manufacturer or its service agent or a similar qualified person in order to avoid a hazard.
- Do not put oily or greasy clothing, candles or flammable materials on top of the appliance.
- Keep the area underneath and around your appliances free of combustible materials (lint, paper, rags, etc.), gasoline, chemicals and other flammable vapors and liquids.
- Do not store or use gasoline or other flammable vapors and liquids in the vicinity of this or any other appliance.
- Do not mix chlorine bleach with ammonia or acids such as vinegar. Follow package directions when using laundry products. Incorrect usage can produce poisonous gas, resulting in serious injury or death.
- Never use harsh chemicals, abrasive cleaners, or solvents to clean the appliance. They will damage the finish.
- Do not wash or dry articles that have been previously cleaned in, washed in, soaked in, or spotted with gasoline, dry-cleaning solvents, vegetable or cooking oil, or other flammable or explosive substances, as they give off vapors that could ignite or explode.
- Do not dry unwashed items in the appliance.
- Remove flammable objects such as lighters and matches from pockets.
- Do not add gasoline, dry cleaning solvents, or other flammable or explosive substances to the wash water. These substances give off vapors that could ignite or explode.
- Under certain conditions, hydrogen gas may be produced in a hot-water system that has not been used for 2 weeks or more. HYDROGEN GAS IS EXPLOSIVE. If the hot-water system has not been used for such a period, before using a washing machine, turn on all hot-water faucets and let the water flow from each for several minutes. This will release any accumulated hydrogen gas. As the gas is flammable, do not smoke or use an open flame during this time.
- Do not tamper with controls.
- Fix the drain hose securely in place to avoid flooding.
- Do not abuse, sit on, or stand on the door of the appliance.
- Always check the inside of the appliance for foreign objects.
- Do not allow water, bleach or other liquids to sit in the drum for extended periods. Doing so can corrode the drum or cause mildew or odors.
- Do not use the appliance to dry articles containing foam rubber or similarly textured rubber-like materials.
- Do not place items exposed to cooking oils in your appliance. Items contaminated with cooking oils may contribute to a chemical reaction that could cause a load to catch fire. To reduce the risk of fire due to contaminated loads, the final part of a tumble dryer cycle occurs without heat (cool down period). Avoid stopping tumble drying before the end of the drying cycle unless all items are quickly removed and spread out so that the heat is dissipated.
- Do not put any part of your body, such as your hands or feet, or metal objects under the appliance.
- Do not place objects on top of the appliance. Do not use the top of the appliance for storage.
- Do not let your hand get pinched when opening or closing the appliance door.

- Do not use replacement parts that have not been recommended by the manufacturer (e.g. parts made at home using a 3D printer).

### Maintenance

- Do not repair or replace any part of the appliance. All repairs and servicing must be performed by qualified service personnel unless specifically recommended in this owner's manual. Use only authorized factory parts.
- Disconnect this appliance from the power supply before cleaning and attempting any user maintenance. Turning the controls to the OFF position does not disconnect this appliance from the power supply.
- Remove any dust or foreign matter from the power plug pins.
- Do not disassemble or repair the appliance by yourself.
- Remove the door(s) before the appliance is removed from service or discarded to avoid the danger of children or small animals getting trapped inside.
- Make sure the dispenser drawer or lid is closed at all times when not being filled with laundry products.
- Clean the lint filter of the dryer before or after each load. On models with two-piece lint filters, clean the inner lint filter before or after each load and the outer lint filter every 10 loads or as needed.
- Unplug the appliance before cleaning to avoid the risk of electric shock.
- The interior of the appliance and exhaust duct should be cleaned periodically by qualified service personnel.
- Certain internal parts are intentionally not grounded and may present a risk of electric shock only during servicing. Service personnel – Do not contact the following parts while the appliance is energized: Motor, Control Board, Noise Filter.
- To avoid physical injury and burns, use care when cleaning the condenser and do not touch or clean the condenser with bare hands.

## CAUTION STATEMENTS

### ⚠ CAUTION

- To reduce the risk of minor or moderate injury to persons, malfunction, or damage to the product or property when using this product, follow basic precautions, including the following:

### Installation

- Install the product on a firm and level floor.

### Operation

- Turn off the water faucets and unplug the appliance if the appliance is to be left for an extended period of time, such as during vacations.
- ALWAYS follow the fabric care instructions supplied by the garment manufacturer.
- Use fabric softeners or products to eliminate static only as recommended by the manufacturer.
- Do not combine laundry products for use in one load unless specified on the label.
- Do not touch draining water, which may be hot.
- If the drain hose and the water inlet hose are frozen in winter, defrost them before using the appliance.
- Do not store or spill liquid detergents, cleaners, or bleaches (chlorine bleach, oxygen bleach) on the appliance. Doing so may result in corrosion, discoloration or damage to the surface of the appliance.
- Clothing or articles that are waterproof or water resistant must be washed in the Waterproof cycle only. (Examples include water resistant clothing, mattress covers, outdoor clothes, plastic mats.) Using

another cycle may result in personal injury or damage to the washer, clothes, walls, floor, and surrounding objects due to abnormal vibration.

- Clean the lint filter before or after each load.



# SAVE THESE INSTRUCTIONS

# PRODUCT OVERVIEW

## Product Features

The images in this guide may be different from the actual components and accessories, which are subject to change by the manufacturer without prior notice for product improvement purposes.

### Front View

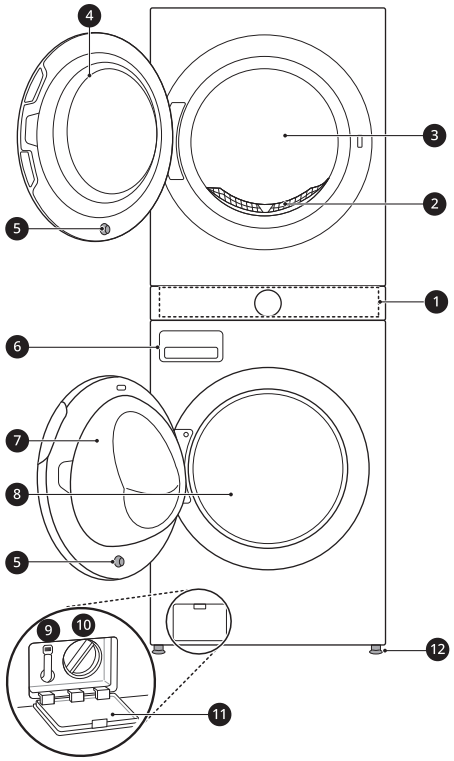


❶ Control Panel

❷ 3-Piece Lint Filter

❸ Dryer Drum

❹ Dryer Door

❺ Magnetic Door Stop

❻ Detergent Dispenser Drawer

❼ Washer Door

❽ Washer Drum

❾ Drain Hose

❿ Drain Pump Filter

⓫ Drain Pump Filter Cover

⓬ Leveling Feet

### Rear View

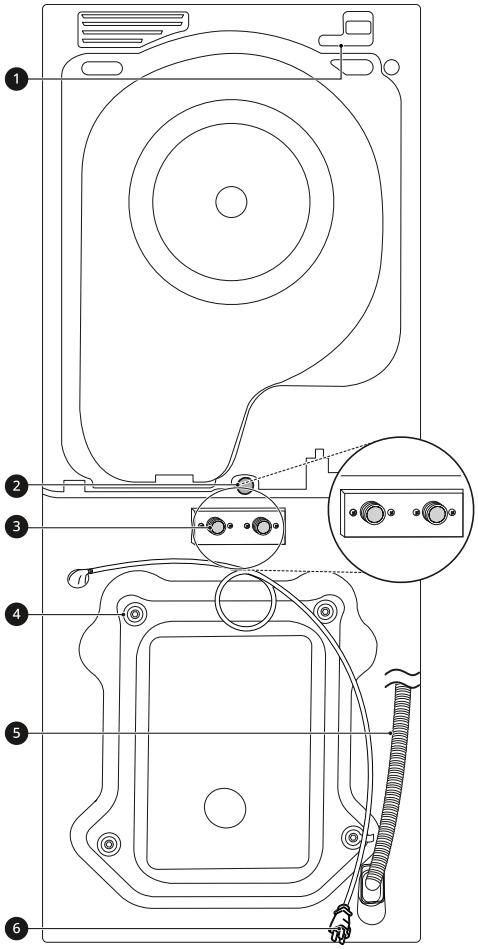


❶ Terminal Block Access Panel

❷ Dryer Drain Outlet (behind stacking bracket)

❸ Hot and Cold Water Inlets

❹ Shipping Bolts

❺ Drain Hose (for Washer)

❻ Power Cord (for Washer)

## Product Specifications

| Model | WKHC252H*A |
|---|---|
| **Electrical Requirements** | Please refer to the rating label for detailed information. |
| **Min. / Max. Water Pressure** | 20 - 120 psi (138 - 827 kPa) |
| **Dimensions (Width X Height X Depth)** | 27'' X 74 3/8'' X 32 3/4'' (70 cm X 189 cm X 83 cm) |
| **Maximum Depth with Door Open** | 57 1/2'' (146 cm) |
| **Net Weight** | 353 lb (160 kg) |
| **Capacity (Washer/Dryer)** | 5.0 cu.ft. / 7.8 cu.ft. |
| **Max. Spin Speed (Washer)** | 1300 RPM |
| **Operating Temperature Range** | 41-95 °F (5-35 °C) |

## Accessories

### Included Accessories

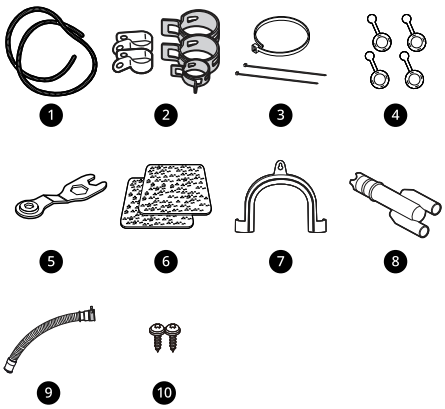


❶ Water Drain Hose (for Dryer)

❷ Band Clamps (5 EA)

❸ Cable Ties (3 EA)

❹ Hole Caps

❺ Wrench

❻ Non-skid Pads

❼ Elbow Bracket (for securing drain hose)

❽ Drain Hose Connector

❾ Short Drain Hose

❿ Screws (2 EA)

## Required Accessory

❶ Hot and Cold Water Hoses (for Washer)

## Optional Accessory (sold separately)

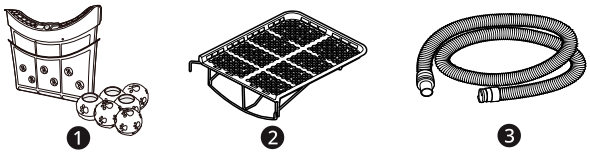

❶ Pet care accessories kit

❷ Drying Rack

❸ Extension Drain Hose (5.2 ft)†

† (U.S.users only) If the length of the drain hose installed on the product is insufficient for your installation environment, use the dedicated LG front loader washing machine extension drain hose. Extension drain hoses can be purchased on the official LG website at https://www.lg.com/us/laundry-accessories or by scanning the QR code.

## Required Accessories for the Electric Dryer (sold separately)

❶ 4-wire power cord kit

❷ 3-wire power cord kit

**⚠ WARNING**

- For your safety and for extended product life, use only authorized components. The manufacturer is not responsible for product malfunction, property damage or bodily injury caused by the use of separately purchased unauthorized components, parts, or non-LG products.

# OPERATION-WASHER

## Using the Washer



**WARNING**

- To reduce the risk of fire, electric shock, or injury to persons, read the SAFETY INSTRUCTIONS before operating this appliance.

### Operation Overview

**1** Sort laundry and load the washer.

- Sort laundry by fabric type, soil level, color and load size as needed. Open the door and load items into the washer.
- If using single-use detergent packs, or gel or tablet detergents, place them in the drum before loading the laundry.

**2** Add cleaning products.

- Add the proper amount of HE (High-Efficiency) detergent to the detergent dispenser.
- If desired, add bleach or fabric softener to the appropriate areas of the dispenser drawer.
- Do not place liquid or powdered detergent packs, or gel or tablet detergents in the dispenser.

**3** Turn on the washer.

- Press the **Power** button to turn on the washer.

**4** Select a cycle.

- Turn the cycle selector knob or press the cycle buttons to select the desired cycle.
- The preset wash temperature, spin speed, soil level and option settings for the selected cycle are shown.
- The **Normal** cycle must be selected in order to change its default settings.
- Pressing the **Start/Pause** button without selecting a cycle immediately starts the **Normal** cycle with the default settings.

**5** Adjust settings.

- Default settings for the selected cycle can be changed, if desired, using the cycle modifier and option buttons.
- Not all modifiers and options are available on all cycles. A different chime sounds and the LED does not light up if the selection is not allowed.

**6** Begin cycle.

- Press the **Start/Pause** button to begin the cycle. The door locks, and the washer agitates briefly without water to measure the weight of the load.
- If the **Start/Pause** button is not pressed within a certain time, the washer shuts off and all settings are lost.

**7** End of cycle.

- When the cycle is finished, a melody sounds. Immediately remove the clothing from the washer to reduce wrinkling.
- Check around the door seal when removing the load for small items that may be caught in the seal.

**NOTE**

- The washer rotates the laundry in a way that allows it to use less water while still fully saturating the clothing. It is normal to be unable to see water during the wash cycle.

## Sorting Laundry

**CAUTION**

- Clothing or articles that are waterproof or water-resistant must be washed in the **Waterproof**, **Bedding**, **Bulky/Large**, or **Jumbo Wash** cycle only. (Examples include water resistant clothing, mattress covers, outdoor clothes, and plastic mats.) Failure to do so may result in personal injury or damage to the washer, clothes, walls, floor, and surrounding objects due to abnormal vibration.
- Remove the stuffing from pillows and cushions before washing the covers. Failure to do so can cause excessive vibration, resulting in damage to the washer, clothes, nearby objects, walls, and floor.

### Grouping Similar Items

For the best washing results, and to reduce the possibility of damage to clothing, sort clothing into loads made up of similar items.

Mixing different fabric types and/or soil levels can result in poor wash performance, color transfer, discoloration, fabric damage or linting. Fabrics should be sorted into groups as described below.

#### Colors

Sort articles by color. Wash dark clothes separately from light colors or whites. Mixing dark clothes with light clothes can result in dye transfer or discoloration of the lighter clothes.

#### Soil Level

Wash heavily soiled clothing together. Washing lightly soiled clothing in the same load with heavily soiled clothing could result in poor wash performance for the lightly soiled clothing.

#### Fabric Type

Delicate articles should not be mixed with heavy or sturdy fabric types. Washing heavy fabrics with delicates can result in poor wash performance for the heavy fabrics and possible damage to the delicates.

#### Lint Type

Some fabrics attract and bind lint to them while others give off lint in the laundry process. Avoid mixing these lint collectors and lint producers in the same load. Mixing these fabrics will result in pilling and linting on the lint collectors. (For example, lint collector - knit sweater; lint producer - terry cloth towels.)

#### How to Sort Laundry

| By Colors | By Soil | By Fabric | By Lint |
|---|---|---|---|
| White | Heavy | Delicates | Lint Producer |
| Lights | Normal | Easy Care | Lint Collector |
| Darks | Light | Sturdy | |

### Fabric Care Labels

Many articles of clothing include a fabric care label. Using the chart below, adjust the cycle and option selections to care for your clothing according to the manufacturer’s recommendations.

| Category | Label | Directions |
|---|---|---|
| Washing | | Hand wash |
| | | Machine wash, Normal cycle |
| | | Perm Press/Wrinkle Resistant setting (which has a cool down or cold spray before the slower spin) |
| | | Gentle/Delicate setting (slow agitation and/or reduced wash time) |
| | | Do not wash |
| | | Do not wring |
| Water Temperature | ••• | Hot |
| | •• | Warm |
| | • | Cold/Cool |
| Bleach Symbols | | Any bleach (when needed) |
| | | Only non-chlorine bleach (when needed) |
| | | Do not bleach |

## Loading the Washer

**WARNING**

- Clothing or articles that are waterproof or water-resistant must be washed in the **Waterproof**, **Bedding**, **Bulky/Large**, or **Jumbo Wash** cycle only. (Examples include water resistant clothing, mattress covers, outdoor clothes, and plastic mats.) Failure to do so may result in personal injury or damage to the washer, clothes, walls, floor, and surrounding objects due to abnormal vibration.

### General Tips

- Check and empty pockets. Paper clips, coins, matches, etc.can damage clothing and the washer.
- Close zippers and hooks, and tie drawstrings to prevent snagging or tangling of clothes.
- Pretreat heavily stained areas for best results.
- Brush off heavy soil, dust, and hair from items before washing. Excess dirt or sand can abrade other fabrics and lead to poor wash performance.
- For best performance, load clothes as shown.

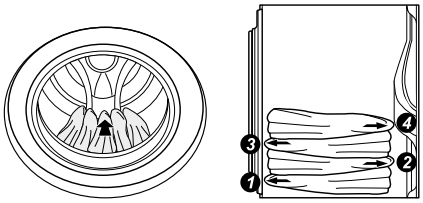


  - Do not press down on items while stacking them in the drum.
  - Load clothes loosely, and do not overfill the drum. Clothes need room to circulate in order to get clean.
- Combine large and small items in the drum. Load large items first. Large items should not be more than half of the total load.
- The washer can be fully loaded, but the drum should not be tightly packed with items. The door of the washer must close easily.
- The washer will not fill or operate with the door open.

### Bulky Items

- Wash thick, bulky items individually. Heavy blankets, comforters, bedspreads, or pet beds can get tangled or cause an unbalanced load if combined with other items.

### Small Items

- Do not wash a single small item. Add enough similar items to the load to prevent an out-of-balance load.
- Wash small, light items in a mesh bag. Small items can get caught in the door seal, and brassiere hooks can snag on other clothing or the drum.

# Adding Cleaning Products

## About Detergent Use

This washer is designed for use with only HE (High-Efficiency) detergents.

- HE detergents produce fewer suds, dissolve more efficiently to improve washing and rinsing performance, and help to keep the interior of the washer clean. Using detergent that is not HE may cause oversudsing and unsatisfactory performance which could result in error codes, cycle failure, and washer damage.
- Detergents designated as HE-compatible may not provide optimal results.
- For proper wash performance, always measure detergent using the measuring device provided by the detergent manufacturer. For an average load, use less than half of the recommended maximum. Use less detergent for soft water, light soil, or smaller loads.
- Use extra care when measuring 2X and 3X concentrated detergents because even a small amount of extra detergent can lead to problems.
- Never use more than the maximum amount of detergent recommended by the manufacturer. Using too much detergent can lead to oversudsing, poor rinsing, detergent buildup in clothing, and residue buildup that can contribute to odors in the washer.

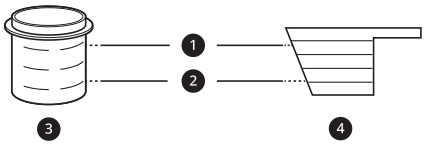


❶ Maximum fill line

❷ Average load fill line

❸ Liquid detergent

❹ Powdered detergent

### Single-Use Detergent Packs / Gel or Tablet Detergents

- Do not use more than one single-use detergent pack in the washer. Using too much detergent may cause oversudsing and unsatisfactory performance. Reduce detergent amount or add an extra rinse if detergent residue is left on fabrics. To add an extra rinse, select the **Extra Rinse** option.
- Place liquid or powdered detergent packs, or gel or tablet detergents in the tub before loading laundry. Do not place these detergents in the dispenser.

## Using the Dispenser

To add cleaning products to the automatic dispenser:

**1** Open the dispenser drawer.

**2** Load the laundry products into the appropriate compartments.

- Follow the manufacturer's recommendations when adding cleaning products.

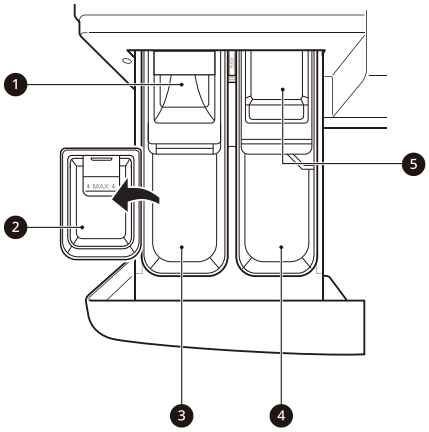


❶ Pre-wash detergent compartment (on some models)

❷ Liquid detergent cup

❸ Main wash detergent compartment

❹ Liquid fabric softener compartment

❺ Liquid chlorine bleach compartment

**3** Gently close the detergent dispenser drawer before starting the cycle.

- Slamming the drawer closed may result in the detergent overflowing into another compartment or dispensing into the drum earlier than programmed.
- Be careful not to get a hand caught in the drawer while closing.
- It is normal for a small amount of water to remain in the dispenser compartments at the end of the cycle.

**CAUTION**

- Do not place or store laundry products, such as detergent, bleach, or liquid fabric softener, on top of your washer. These products can damage the washer's finish and controls.

## Pre-wash Detergent Compartment

Add liquid or powdered detergent to this compartment when using the **Pre-wash** option. Always use HE (High-Efficiency) detergent with your washer.

- When using the **Pre-wash** option, liquid detergent for the main wash needs to be loaded in the liquid detergent cup accessory in the main wash dispenser (where applicable), to prevent it from being dispensed with the pre-wash detergent.
- The amount of detergent added for the **Pre-wash** option is 1/2 the amount recommended for the main wash cycle. For example, if the main wash cycle requires one measure of detergent, add 1/2 measure for the **Pre-wash** option.

## Main Wash Detergent Compartment

This compartment holds laundry detergent for the main wash cycle. Either powdered or liquid detergent may be used in this compartment.

- The detergent is added to the load at the beginning of the cycle. Always use HE (High-Efficiency) detergent with your washer.
- Do not exceed the maximum fill line. Using too much detergent can result in detergent buildup in clothing and the washer.
- Liquid or powdered color-safe bleach may be added to the main wash compartment with detergent of the same type. Do not mix liquids and powders
- If the dispenser has a liquid detergent cup and insert:
  - Make sure they are in place when using liquid detergent.
  - Make sure to remove them when using powdered detergent. Powdered detergent will not dispense with the liquid detergent cup and insert in place.
- Guidelines on the dispenser indicate the amount of detergent added.

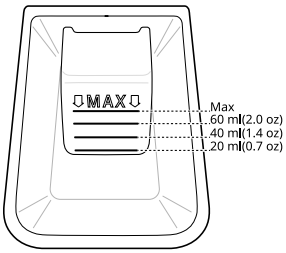


- If you use a detergent that does not dissolve easily or a detergent with high viscosity, it will leave a residue and clog the dispenser.

## Liquid Bleach Compartment

This compartment holds liquid bleach, which is dispensed automatically at the proper time during the wash cycle. The dispenser is activated twice to ensure complete dispensing of the bleach. Any liquid remaining in the dispenser at the end of the cycle is water, not bleach.

**WARNING**

- Do not mix chlorine bleach with ammonia or acids such as vinegar or rust/scale remover. Mixing chemicals like these can produce a lethal gas, resulting in severe injury or death.

**NOTE**

- Do not add powdered bleach to this compartment. The bleach compartment is designed to dispense liquid chlorine bleach only. Powdered or liquid color-safe bleach will not dispense properly.
- Follow the manufacturer's recommendations when adding bleach. Never add more than one cup, and do not exceed the maximum fill line or the bleach may be dispensed immediately and damage fabrics. Using too much bleach can also damage fabrics.
- Never pour undiluted liquid chlorine bleach directly onto the load or into the drum. Fabric damage can occur.
- Do not use color-safe bleach or oxygen bleach in the same cycle with liquid chlorine bleach.

## Fabric Softener Compartment

This compartment holds fabric softener, which is automatically dispensed during the final rinse cycle. Either powdered or liquid fabric softener may be used.

- Do not exceed the maximum fill line. Using too much fabric softener may stain clothes or cause buildup on fabrics or in the washer.
- Dilute concentrated fabric softeners with warm water.
- Never pour fabric softener directly onto the load or into the drum.

# Control Panel

## Control Panel Features for the Washer

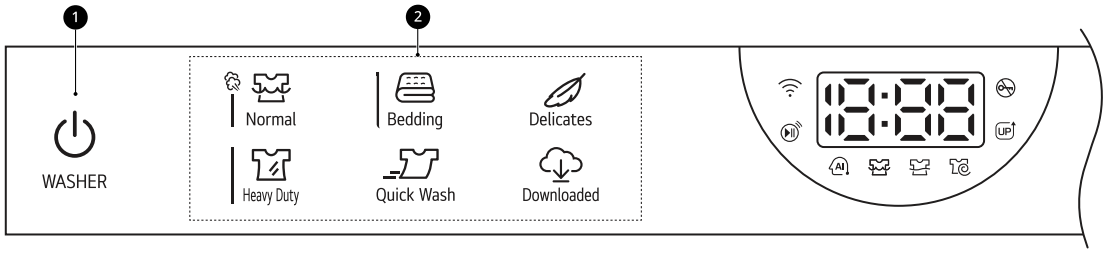


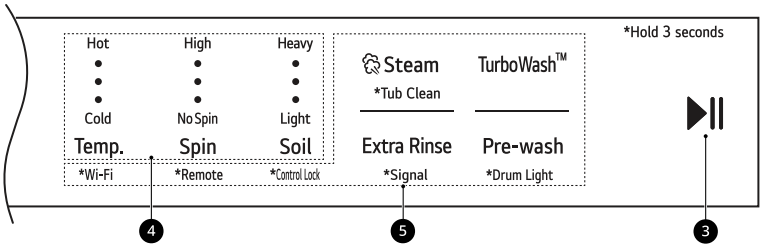


### ❶ Power On/Off Button

- Press this button to turn the washer on or off.
- Pressing this button during a cycle will cancel that cycle and any load settings will be lost.
- The door will unlock after a brief pause.

**NOTE**

- If there is any water remaining in the drum after the washer shuts off, it will drain after a delay. The washer can be restarted at any time before the drain begins. However, once the water begins to drain, all functions will be suspended until the water has been completely drained and the washer shuts off.

### ❷ Cycles

- Press a button to select the desired cycle.
- Once the desired cycle has been selected, the standard presets will appear in the display. These settings can be adjusted using the **Cycle Modifier buttons** at any time before starting the cycle.

### ❸ Start/Pause Button

- Press and hold this button to start the selected cycle.
- If the washer is running, use this button to pause the cycle without losing the current settings.

**NOTE**

- If the **Start/Pause** button is not pressed to start the selected cycle, after a delay the washer automatically turns off and all cycle settings are lost. Any water remaining in the drum will be drained.

### ❹ Cycle Modifier Buttons

- Use these buttons to adjust the wash temperature, spin speed and soil level settings for the selected cycle.
- The current settings are shown in the display.
- Press the button for that option to select other settings.

### ❺ Option and Extra Function Buttons

- These buttons allow you to select additional cycle options. Certain buttons also allow you to activate special functions by pressing and holding the button for **3 seconds**.

### Remote Start

Use a smartphone to control your washer remotely.

- For more information, see **SMART FUNCTIONS** in this manual.

### Wi-Fi

When the washer is connected to a home Wi-Fi network, the icon on the control panel is lit.

- To connect the washer to the **LG ThinQ** application, press and hold the **Temp.** button for 3 seconds.

## Time and Status Display

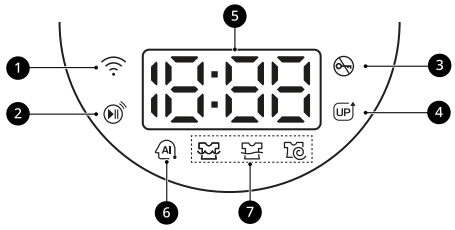


❶ **Wi-Fi Indicator**

- This indicator is lit when the product is connected to a home Wi-Fi network.

❷ **Remote Start Indicator**

- This indicator lights up when the **Remote Start** feature is activated.

❸ **Door Lock Indicator**

- This indicator lights up when the cycle starts and the door is locked.
- The indicator light stays on until the cycle is paused, stopped or has finished.

❹ **Upgrade Indicator**

- This indicator lights up when new upgrade content is updated. Run the **LG ThinQ** app to update.

❺ **Estimated Time Remaining**

- When a cycle is selected, the default time for that cycle is displayed. This time will change as modifiers or options are selected.
- If the display shows `-:--`, then the time will be displayed after the load sensing has detected the load size.
- The time shown is only an estimate. This time is based on normal operating conditions. Several external factors (load size, room temperature, incoming water temperature, etc.) can affect the actual time.

**NOTE**

- Once the **Start/Pause** button is pressed, the washer will measure the size of the load. The estimated time may change once the load size has been measured.

❻ **AI DD Indicator**

- This feature offers optimized washing by detecting the load size and laundry characteristics.
  The indicator lights up when the **Normal** cycle is selected with a **Warm** wash temperature setting.

**NOTE**

- The **AI DD** functionality may vary depending on the environment and model.



❼ **Cycle Status Indicators**

- These LEDs will blink when a cycle is selected to indicate which stages will run.
- When a cycle is running, the LED for the active stage will blink, and the LEDs for the remaining stages will remain steady. Once a stage is complete, the LED will turn off. If a cycle is paused, the active stage LED will stop blinking.

# Wash Cycles

The wash cycles are designed for specific types of wash loads. Select the cycle that best matches the load contents for maximum wash performance and fabric care. See **Sorting Laundry** section for best results, and follow the fabric care labels on your garments. For a guide to fabric care symbols, see **Sorting Laundry** section.

## Cycle Guide

Turn the knob or press the button to select the desired cycle. When you select a wash cycle, the light for the corresponding wash cycle will turn on.

**NOTE**

- Whenever load weights are mentioned, assume **1 lb (0.45 kg)** = 1 thick bath towel (dry).

- **Temperature**: **Cold** > **Cool** > **Warm** > **Very Warm** > **Hot**
- **Spin**: **No Spin** > **Low** > **Medium** > **Medium High** > **High**
- **Soil**: **Light** > **Medium Light** > **Normal** > **Medium Heavy** > **Heavy**

| Cycle | Normal | |
|---|---|---|
| **Description** | Use to wash all normal items such as cotton, linen, shirts, jeans or mixed loads, except delicate fabrics such as wool or silk.<br>• Pressing the **Start/Pause** button without selecting a cycle will cause the **Normal** cycle to begin immediately, using the default settings. | |
| **Wash Temp.** | Default: **Warm** | Available: All |
| **Spin Speed** | Default: **Medium High** | Available: **High**, **Medium High**, **Medium**, **Low** |
| **Soil Level** | Default: **Normal** | Available: All |

| Cycle | Bedding | |
|---|---|---|
| **Description** | Suitable for washing blankets or bulky items which have difficulty absorbing water, such as pillows, blankets, comforters, sheets or pet bedding.<br>• Do not use this cycle to wash a mixed load of bedding and non-bedding items.<br>• Do not mix large/bulky items with smaller articles of clothing.<br>• Do not wash excessively large items. If large/bulky items do not fit easily into the tub, there may not be enough room for them to move during washing. | |
| **Wash Temp.** | Default: **Warm** | Available: **Very Warm**, **Warm**, **Cool**, **Cold** |
| **Spin Speed** | Default: **Medium** | Available: **Medium**, **Low**, **No Spin** |
| **Soil Level** | Default: **Normal** | Available: All |

| Cycle | Delicates | |
|---|---|---|
| **Description** | Suitable for washing dress shirts/blouses, nylons, lingerie, or sheer and lacy clothes which can easily be damaged. **(less than 8 lb (3.63 kg))** | |
| **Wash Temp.** | Default: **Cool** | Available: **Warm**, **Cool**, **Cold** |
| **Spin Speed** | Default: **Medium** | Available: **Medium**, **Low**, **No Spin** |

| Cycle | Delicates | |
|---|---|---|
| **Soil Level** | Default: **Normal** | Available: All |

| Cycle | Heavy Duty | |
|---|---|---|
| **Description** | Suitable for washing heavily soiled laundry, such as cotton fabrics, using more powerful wash motions.<br>• When washing large loads, there will be brief periods of **2 minutes** or more without agitation. These soak periods are part of the cycle's design, and are normal. | |
| **Wash Temp.** | Default: **Warm** | Available: All |
| **Spin Speed** | Default: **High** | Available: **High**, **Medium High**, **Medium**, **Low** |
| **Soil Level** | Default: **Heavy** | Available: All |

| Cycle | Quick Wash | |
|---|---|---|
| **Description** | Quickly washes lightly soiled clothing and small loads. For high wash and rinse efficiency, wash small loads of 2-3 lightly soiled garments. **(less than 3 lb (1.36 kg))**<br>• Use very little detergent in this cycle. To add an extra rinse, use the **Extra Rinse** option. | |
| **Wash Temp.** | Default: **Very Warm** | Available: **Very Warm**, **Warm**, **Cool**, **Cold** |
| **Spin Speed** | Default: **High** | Available: All |
| **Soil Level** | Default: **Light** | Available: All |

| Cycle | Downloaded (Rinse+Spin) | |
|---|---|---|
| **Description** | Use a smartphone to download a specialized cycle to this cycle position.<br>• The default cycle is **Rinse+Spin**. This cycle is also available for download.<br>• Refer to the **LG ThinQ** application to see the cycles available for download. | |
| **Wash Temp.** | Default: **Cool** | Available: **Cool** |
| **Spin Speed** | Default: **Medium High** | Available: All |
| **Soil Level** | Default: - | Available: - |

## Available Options

† This option is automatically included in the cycle and cannot be deselected.

**NOTE**

- If the **Turbo Wash** option is on, you cannot set the spin level to **No Spin**.

| Cycle | Steam | Turbo Wash | Extra Rinse | Pre-wash |
|---|---|---|---|---|
| **Normal** | ● | ●† | ● | ● |
| **Bedding** | ● | ● | ● | ● |

| Cycle | Steam | Turbo Wash | Extra Rinse | Pre-wash |
|---|---|---|---|---|
| **Delicates** | | | ● | ● |
| **Heavy Duty** | ● | ●† | ● | ● |
| **Quick Wash** | | ● | ● | |
| **Downloaded**<br>default: **Rinse+Spin** | | | ● | |

# Cycle Modifiers

## About Modifier Buttons

Each cycle has default settings that are selected automatically. You can also customize these settings using the cycle modifier buttons.

- Repeatedly press the button for the desired modifier until the indicator light for the desired setting is lit.
- The washer automatically adjusts the water level for the type and size of wash load for best results and maximum efficiency.
- This is a high-efficiency washer, and the water levels may be much lower than you expect. This is normal, and cleaning/rinsing performance will not be compromised.

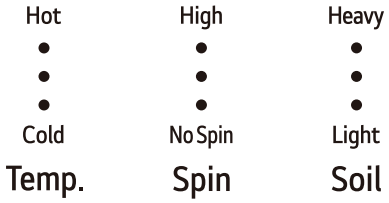


**NOTE**

- The LED next to the setting lights up when the setting is selected.
- To protect your garments, not every wash temperature, spin speed, soil level, or option is available with every cycle.
- A chime will sound twice and the LED will not light if the desired setting is not allowed for the selected cycle.
- Follow the fabric care labels on the garment for best results.

### Temp.

Make sure the wash temperature is suitable for the type of load you are washing.

- Press the **Temp.** button repeatedly to select the wash and rinse temperature combination for the selected cycle.
- All rinses use unheated cold water.
- Cold rinses use less energy. The actual cold rinse temperature depends on the temperature of the cold water at the faucet.
- In cold-weather states, where tap water reaches 40 ℉ (4 ℃) or lower in the winter, detergents may not perform well. In these areas, warm or hot water may be necessary to get clothes clean.

### Spin

Higher spin speeds extract more water from clothes, reducing drying time and saving energy.

- Press the **Spin** button repeatedly until the desired speed is selected.
- Some fabrics, such as delicates, require a slower spin speed.

### Soil

Adjusting the soil level setting will modify the cycle times and/or wash actions.

- Press the **Soil** button repeatedly until the desired soil level is selected.
- The **Heavy** soil setting may increase cycle times. The **Light** soil setting may decrease cycle times.

# Options and Extra Functions

Your washer includes several additional cycle options to customize cycles to meet your individual needs.

- Select the desired option after selecting the desired cycle and settings.

**NOTE**

- The LED for the option will light when the option is selected.
- To protect your garments, not every option is available with every cycle.
- A chime will sound twice and the LED will not light if the selected option is not allowed for the selected cycle.

## Special Cycles

### Tub Clean

This is a special cycle designed to clean the inside of the washer. To select the cycle, press and hold the Steam button for 3 seconds.

## Steam

Adding this option to a wash cycle helps provide superior cleaning performance. Using steam gives fabrics the cleaning benefits of a very hot wash.

- Steam may not be clearly visible during steam cycles. This is normal. Too much steam could damage clothing.
- Do not use steam with delicate fabrics such as wool and silk, or easily discolored fabrics.

**WARNING**

- Do not touch the door during steam cycles. The door surface can become very hot and can cause severe burns. Allow the door lock to release before opening the door.
- Do not attempt to override the door lock mechanism or reach into the washer during a steam cycle. Steam can cause severe burns.

## Turbo Wash

Adding this option reduces the cycle time while still providing similar wash performance to the same cycle without **Turbo Wash**.

**NOTE**

- This option cannot be used with all cycles.
- This option defaults to on for **Normal** and **Heavy Duty** wash cycles.

## Extra Rinse

This option adds an extra rinse to the selected cycle. Use this option to help ensure the removal of detergent or bleach residue from fabrics.

- Press the **Extra Rinse** button to add additional rinses to the cycle.

## Using the Pre-wash Option

This option adds a pre-wash (for about **15 - 17 minutes**) for improved cleaning of heavily soiled or stained clothing.

**NOTE**

- If you select **Pre-wash** after putting the detergent directly in the drum, the detergent may be washed away, reducing the washing performance.

## Control Lock

Use this function to disable the controls. This function can prevent children from changing cycles or operating this washer.

**NOTE**

- The function does not lock the door.
- Once this function is set, all buttons are locked except the **Power** button.
- When the controls are locked, CL and the remaining time are alternately shown on the display during the wash cycle.
- Turning off the power will not reset this function. You must deactivate this function before you can access any other options and functions.

### Locking/Unlocking the Control Panel

1. Turn on the power.
2. Press and hold the **Soil** button for 3 seconds to activate/deactivate this function.

- When the function is deactivated, a chime will sound and the remaining time for the current cycle will reappear on the display.

## Signal

The washer plays a melody when the wash cycle is finished. The buttons make a sound each time a button is pressed. Use this button to turn the melody and button tones on or off.

- To turn the function on/off, press and hold the **Extra Rinse** button for 3 seconds.

## Drum Light

The drum is equipped with a white LED light that illuminates when the washer is turned on. This light automatically turns off when the door is closed and the cycle starts.

- Press and hold the **Pre-wash** button for 3 seconds during the cycle to turn on the drum light.
- The drum light will turn off automatically after 4 minutes.

# OPERATION-DRYER

## Using the Dryer

**WARNING**

- To reduce the risk of fire, electric shock, or injury to persons, read the SAFETY INSTRUCTIONS before operating this appliance.

### Operation Overview

**1** Clean the lint filter.

- If the lint filter has not already been cleaned, lift out the filter and remove the lint from the last load. This will help ensure the fastest and most efficient drying performance. Make sure to reinstall the filter, pressing down until it clicks firmly into place. On models with a 3-piece lint filter, make sure to check and clean both the 2-piece inner and outer lint filters.

**2** Load the dryer.

- Make sure that clothing is pushed entirely into the drum and away from the door seal area. Clothing that gets stuck between the door and seal may be damaged or damage the seal.
- Load the dryer with the wet laundry from the washer. If the load is extra large, you may need to divide it into smaller loads for proper performance and fabric care.
- All strings and attached belts of clothes should be well tied and secured before being put into the drum.

**3** Turn on the dryer.

- Press the **Power** button to turn on the dryer. The cycle LEDs will illuminate and a chime will sound.

**4** Select a cycle.

- Press a cycle button to select a cycle. The preset temperature, dry level, and option settings for that cycle will be shown.

**5** Adjust the settings.

Default settings for the selected cycle can now be changed, if desired, using the cycle modifier and option buttons.

- Not all modifiers and options are available on all cycles. A different chime will sound and the LED will not come on if the selection is not allowed.

**6** Begin the cycle.

- Press the **Start/Pause** button to begin the cycle. The cycle can be paused at any time either by opening the door or by pressing the **Start/Pause** button.
- On some models, the door automatically locks when the cycle starts. To open the door during a cycle, pause the cycle.
- If the **Start/Pause** button is not pressed within a certain time, the dryer shuts off and all settings are lost.

**7** End of Cycle

- When the cycle is finished, the chime will sound. Immediately remove your clothing from the dryer to reduce wrinkling. If **Wrinkle Care** is selected, the dryer will tumble briefly every few minutes to help prevent wrinkles from setting in the clothes.

### Check the Lint Filter Before Every Load

Always make sure the lint filter ❶ is clean before starting a new load; a clogged lint filter will increase drying time. To clean, pull the lint filter straight up and roll any lint off the filter with your fingers. Push the lint filter firmly back into place. See **Regular Cleaning** for more information.

- On some models, the door automatically locks when the cycle starts. To open the door during a cycle, pause the cycle.

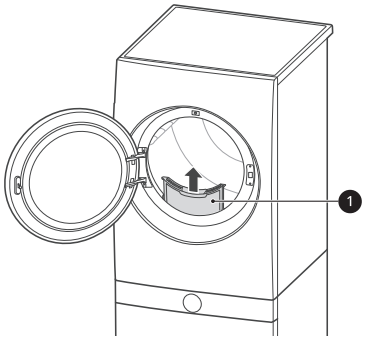


Always ensure the lint filter is properly installed before running the dryer. Running the dryer with a loose or missing lint filter will damage the dryer and articles in the dryer.

## Loading the Dryer

### General Tips

- Combine large and small items in the same load.
- Close zippers, hooks and drawstrings to prevent these items from snagging or tangling on other clothes.

**NOTE**

- Damp clothes will expand as they dry. Do not overload the dryer; clothes require room to tumble and dry properly.

### Grouping Similar Items

For the best drying results, and to reduce the possibility of damage to clothing, sort clothes into loads that can be dried with the same drying cycle.

Different fabrics have different care requirements, and some fabrics will dry more quickly than others.

#### Woolen Items

Always follow fabric care labels before drying woolen items in a dryer. After the cycle, the items may still be damp. Do not repeat the cycle. Pull the items to their original shape if needed and lay them flat to finish drying.

#### Woven and Loopknit Materials

Some woven and loopknit materials may shrink, depending on quality.

#### Permanent Press and Synthetics

Do not overload your dryer. Take out permanent press items as soon as the dryer stops to reduce wrinkles.

#### Baby Clothes and Nightgowns

Always check the manufacturer’s instructions.

#### Rubber and Plastics

Do not dry any items made from or containing rubber or plastics such as:

- Aprons, bibs and chair covers
- Curtains and tablecloths
- Bath mats

#### Fiberglass

Do not dry fiberglass articles in your dryer. Glass particles left in the dryer could be picked up by your clothes the next time you use the dryer and irritate your skin.

#### Fabric Care Labels

Sort and dry laundry according to care labels, size, and fabric type. Do not overload the dryer. This will save energy and time and give the best drying performance.

### Fabric Care Labels

Many articles of clothing include a fabric care label. Using the chart below, adjust the cycle and option selections to care for your clothing according to the manufacturer's recommendations.

| Tumble Dry | |
|---|---|
| **Label** | **Directions** |
| | Dry |
| | Normal |
| | Permanent Press / Wrinkle Resistant |
| | Gentle / Delicate |
| | Do not tumble dry |
| | Do not dry (used with do not wash) |

| Heat Setting | |
|---|---|
| **Label** | **Directions** |
| ••• | High |
| •• | Medium |
| • | Low |
| ● | No Heat / Air |

# Control Panel

## Control Panel Features for the Dryer

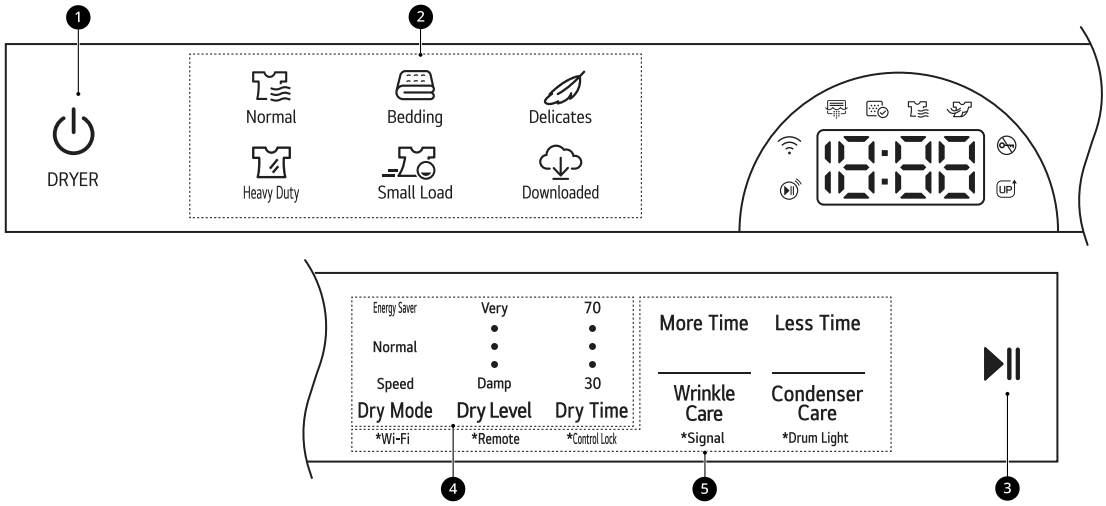


### ❶ Power Button

- Press the button to turn the appliance on. Press again to turn the appliance off.

**NOTE**

- Pressing the **Power** button during a cycle will cancel that cycle and any load settings will be lost.

### ❷ Cycles

- Press a button to select the desired cycle. Once the desired cycle has been selected, the standard presets will be shown in the display.

### ❸ Start/Pause Button

- Press and hold this button to start the selected cycle. If the appliance is running, use this button to pause the cycle without losing the current settings.

**NOTE**

- If you do not press the **Start/Pause** button to resume a cycle within a certain time, the appliance turns off automatically and all cycle settings are lost.

### ❹ Cycle Modifier Buttons

- Press these buttons to select additional cycle options. Press and hold any button marked with an asterisk for 3 seconds to activate a special function.

### ❺ Extra Options and Functions

- Use these buttons to select the desired options for the selected cycle. Not all options are available for each cycle.
- **Remote Start**
  - With the **LG ThinQ** app, you can use a smartphone to control your appliance remotely.
- **Wi-Fi**
  - Press and hold the **Dry Mode** button for 3 seconds to initiate the connection of the appliance to the **LG ThinQ** application.

## Time and Status Display

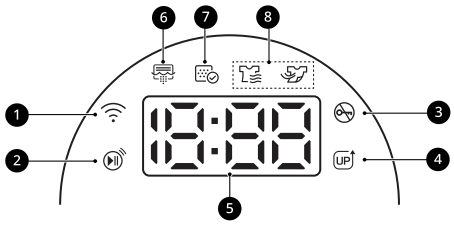


❶ **Wi-Fi Indicator**

- This indicator is lit when the product is connected to a home Wi-Fi network.

❷ **Remote Start Indicator**

- This indicator lights up when the Remote Start feature is activated.

❸ **Door Lock Indicator**

- This indicator lights up when the cycle starts and the door is locked.
- The indicator light stays on until the cycle is paused, stopped or has finished.

❹ **Upgrade Indicator**

- This indicator lights up when new upgrade content is updated. Run the **LG ThinQ** app to update.

❺ **Estimated Time Remaining**

- When a drying cycle is selected, the estimated drying time for the selected cycle is displayed. This time will change if you select extra options for the cycle.
- The cycle time on Sensor Dry cycles may fluctuate as the appliance recalculates drying time for optimal results.

❻ **Condenser Clean Indicator**

- This icon indicates the condenser auto cleaning status. The icon is displayed when water is being sprayed on the condenser.

❼ **Lint Filter Status Indicator**

- lights up when the appliance is turned on as a reminder to clean the lint filter. It turns off when the **Start/Pause** button is pressed. It also lights up if the lint filter needs to be cleaned.
  - On models with a 3-piece lint filter, remember to check, clean and reinstall both the inner and outer parts of the filter.

❽ **Cycle Status Indicators**

- lights up when the appliance is in the drying stage.
- lights up when the appliance is in the cool down stage.

# Dry Cycles

## Cycle Guide

The appliance automatically sets the dryness level and temperature at the recommended setting for each cycle. The estimated time remaining will be shown in the display.

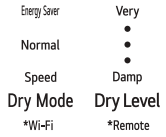


- **Dry Mode** : **Speed** > **Normal** > **Energy Saver**
- **Dry Level**: **Damp** > **Less** > **Normal** > **More** > **Very**

| Cycle | Normal | |
|---|---|---|
| **Description** | Use this cycle for drying all normal items such as cotton, linen, shirts, jeans or mixed loads, except delicate fabrics such as wool or silk. | |
| **Dry Mode** | Default: **Normal** | Available: **All** |
| **Dry Level** | Default: **Normal** | Available: **All** |

| Cycle | Bedding | |
|---|---|---|
| **Description** | Use this cycle for drying blankets or bulky items such as pillows, blankets, comforters, sheets or pet bedding. | |
| **Dry Mode** | Default: **Normal** | Available: **Normal** |
| **Dry Level** | Not adjustable | |

| Cycle | Delicates | |
|---|---|---|
| **Description** | Use this cycle for drying dress shirts/blouses, nylons, lingerie, or sheer and lacy clothes which can easily be damaged. | |
| **Dry Mode** | Default: **Speed** | Available: **Speed** |
| **Dry Level** | Default: **Normal** | Available: **All** |

| Cycle | Heavy Duty | |
|---|---|---|
| **Description** | Use this cycle for drying heavy-duty clothes like jeans or garments that need extra drying. | |
| **Dry Mode** | Default: **Normal** | Available: **Normal** |
| **Dry Level** | Not adjustable | |

| Cycle | Small Load | |
|---|---|---|
| **Description** | Use this cycle for drying light or small items. (up to 3 items) | |
| **Dry Mode** | Default: **Speed** | Available: **Speed** |
| **Dry Level** | Not adjustable | |

| Cycle | Downloaded (Perm. Press) | |
|---|---|---|
| **Description** | Use a smartphone to download a specialized cycle to this cycle position.<br>• The default cycle is **Perm. Press**. This cycle is also available for download.<br>• Refer to the **LG ThinQ** application to see the cycles available for download. | |
| **Dry Mode** | Default: **Normal** | Available: **Normal** |
| **Dry Level** | Default: **Normal** | Available: **Normal**, **Less** |

## Available Options

| Cycle | | Dry Mode | | | | Wrinkle Care |
|---|---|---|---|---|---|---|
| **Cycle** | **Dry Level** | **Off** | **Energy Saver**† | **Normal** | **Speed** | |
| **Normal** | **Very** | | ● | ● | ● | ● |
| | **More** | | ● | ● | ● | ● |
| | **Normal** | | ● | ● | ● | ● |
| | **Less** | | ● | ● | ● | ● |
| | **Damp** | | ● | ● | ● | ● |
| **Bedding** | - | | | ● | | ● |
| **Delicates** | **Very** | | | | ● | ● |
| | **More** | | | | ● | ● |
| | **Normal** | | | | ● | ● |
| | **Less** | | | | ● | ● |
| | **Damp** | | | | ● | ● |
| **Heavy Duty** | - | | | ● | | ● |
| **Small Load** | - | | | | ● | ● |
| **Downloaded** default: **Perm. Press** | **Normal** | | | ● | | ● |
| | **Less** | | | ● | | ● |

† This option helps to reduce the energy use by drying clothes at lower temperature than normal mode. When this option is set, the drying time will increase.

# Cycle Modifiers

## About Modifier Buttons

Each cycle has default settings that are selected automatically. Customize these settings using the cycle modifier buttons. Press the button for the desired modifier to open the modifier's screen.

| | | |
|---|---|---|
| Energy Saver | Very | 70 |
| | • | • |
| Normal | • | • |
| | • | • |
| Speed | Damp | 30 |
| Dry Mode | Dry Level | Dry Time |

### Dry Mode

Use this option to help reduce energy consumption or save time when drying clothes.

- **Energy Saver** : Dry clothes with recommended settings at a lower temperature. When the option is set, the drying time will increase.
- **Normal** : Dry clothes with recommended settings.
- **Speed** : Dry clothes more quickly.

**NOTE**

- Selectable options will differ depending on the selected cycle.

### Dry Level

Use this button to select the dryness level for the cycle. Press the **Dry Level** button repeatedly to scroll through available settings.

- The appliance will automatically adjust the cycle time according to the selected dryness level. Selecting **More** or **Very** will increase the cycle time, while **Less** or **Damp** will decrease the cycle time.
- Use a **Less** or **Damp** setting for items that you wish to iron.

### Dry Time

Use this button to manually select the drying time, from 30 to 180 minutes.

# Options and Extra Functions

Your dryer includes several additional cycle options to customize cycles to meet your individual needs.

Select the desired option after selecting the desired cycle and settings.

**NOTE**

- The LED for the option will light up when the option is selected.
- To protect your garments, not every option is available with every cycle.
- A chime will sound twice and the LED will not light up if the selected option is not allowed for the selected cycle.

## More Time / Less Time

Use these buttons to increase or decrease drying time in 5 minutes increments when you use the **Dry Time** function.

## Wrinkle Care

Selecting this option will tumble the load periodically for up to 2 hours after the selected cycle, or until the door is opened. This is helpful in preventing wrinkles when you are unable to remove items from the dryer immediately.

Press the **Wrinkle Care** button before you start a drying cycle.

**NOTE**

- When the option is set, a rectangle with a dashed line and End appears on the display until the feature is off.
- When the option is set, only the **Power** button works after the drying cycle ends.
- When a drying cycle is running, pause the cycle first to set the option.
- Always turn off the appliance before unloading the clothes.

## Control Lock

Use this function to disable the controls. This function can prevent children from changing cycles or operating this dryer.

**NOTE**

- The function does not lock the door.
- Once this function is set, all buttons are locked except the **Power** button.
- When the controls are locked, CL and the remaining time are alternately shown on the display during the dry cycle.

- Turning off the power will not reset this function. You must deactivate this function before you can access any other options and functions.

### Locking/Unlocking the Control Panel

**1** Turn on the power.

**2** Press and hold the **Time Dry** button for 3 seconds to activate/deactivate this function.

- When the function is deactivated, a chime will sound and the remaining time for the current cycle will reappear on the display.

## Signal

The dryer plays a melody when the dry cycle is finished. The buttons make a sound each time a button is pressed. Use this button to turn the melody and button tones on or off.

- To turn the function on/off, press and hold the **Wrinkle Care** button for 3 seconds.

## Condenser Care

The appliance automatically cleans built-up lint off of the condenser using water condensed from the drying process. If needed, the condenser can also be cleaned manually. See the **Maintenance** section for the dryer for details.

## Drum Light

The drum is equipped with a white LED light that illuminates when the dryer is turned on. This light automatically turns off when the door is closed and the cycle starts.

- Press and hold the **Condenser Care** button for 3 seconds during the cycle to turn on the drum light.
- The drum light will turn off automatically after 4 minutes.

# SMART FUNCTIONS

## Using LG ThinQ Application

The **LG ThinQ** application allows you to communicate with the appliance using a smartphone.

### LG ThinQ Application Features

- **Remote Start**
  - Control the appliance remotely from the **LG ThinQ** application.
- **Downloaded**
  - Download new and specialized cycles that are not included in the standard cycles on the appliance. Once cycle download is completed in the appliance, the product keeps the downloaded cycle until a new cycle is downloaded.
- **Cloud Cycle**
  - The Cloud cycles include many cycles which are started from the Cloud and offer various options. However, the downloaded cycle is deleted from the appliance when the power is turned off.
- **Tub Clean Coach (Washer)**
  - Find out how many cycles remain before it is time to run the **Tub Clean** cycle.
- **Energy Monitoring**
  - Keep track of the appliance's power consumption and how it is affected by your selected wash cycles and options.
- **Smart Diagnosis**™
  - This function provides useful information for diagnosing and solving issues with the appliance based on the pattern of use.
- **Push Alerts**
  - When the cycle is complete or the appliance has problems, you will receive a push message.
- **Settings**
  - Set various options on the appliance and in the application.

**NOTE**

- In the following cases, you must update the network information for each appliance in the **LG ThinQ** application under **Device Cards** > **Settings** > **Change Network**.
  - wireless router is changed
  - wireless router password is changed
  - Internet service provider is changed
- This information is current at the time of publication. The application is subject to change for product improvement purposes without notice to users.

### Installing LG ThinQ Application and Connecting an LG Appliance

#### Models with QR Code

Scan the QR code attached to the product using the camera or a QR code reader app on your smartphone.

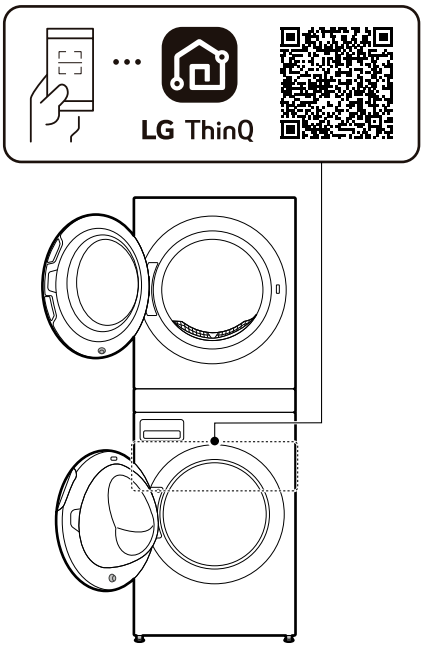


#### Models without QR Code

1 Search for and install the **LG ThinQ** app from the Google Play Store or Apple App Store on a smartphone.

2 Run the **LG ThinQ** app and sign in with your existing account or create an LG account to sign in.

3 Touch the add (+) button on the **LG ThinQ** app to connect your LG appliance. Follow the

instructions in the app to complete the process.

**NOTE**

- You may be asked to provide a password to connect to the LG network (not your home network) during the Wi-Fi setup. The password is the last 4 characters of the network name, repeated twice, with no spaces. For example, if the network name appears as LG_XXXX_8b92, then you would enter 8b928b92 as your password. The password is case sensitive and the last 4 characters are unique to your appliance.
- To verify the Wi-Fi connection, check that the icon on the control panel is lit.
- The appliance supports 2.4 GHz Wi-Fi networks only. To check your network frequency, contact your Internet service provider or refer to your wireless router manual.
- **LG ThinQ** is not responsible for any network connection problems or any faults, malfunctions, or errors caused by network connection.
- If the appliance is having trouble connecting to the Wi-Fi network, it may be too far from the router. Purchase a Wi-Fi repeater (range extender) to improve the Wi-Fi signal strength.
- The Wi-Fi connection may not connect or may be interrupted because of the home network environment.
- The network connection may not work properly depending on the Internet service provider.
- The surrounding wireless environment can make the wireless network service run slowly.
- If the appliance cannot be registered due to problems with the wireless signal transmission, unplug the appliance and wait about a minute before trying again.
- The wireless network name (SSID) should be a combination of English letters (A-Z) and numbers (0-9). Do not use special characters.
- Smartphone user interface (UI) may vary depending on the mobile operating system (OS) and the manufacturer.
- If the security protocol of the router is set to **WEP**, network setup may fail. Change the security protocol (**WPA2** is recommended) and connect the product again.

## Using the Washer/Dryer Remotely

### Remote Start

Use a smartphone to control your appliance remotely. You can also monitor your cycle operation so you know how much time is left in the cycle.

#### Using Remote Start

1. Load the laundry.
2. Press the **Power** button.
3. Press and hold the **Remote** button for 3 seconds to enable the remote control function.
4. Start a cycle from the **LG ThinQ** application on your smartphone.

**NOTE**

- Once this function is enabled, you can only start a cycle from the **LG ThinQ** smartphone application. If the cycle is not started, the appliance will wait to start the cycle until it is turned off remotely from the application or this function is disabled.
- If the door has been opened, you cannot start a cycle remotely.

#### Disabling Remote Start Manually

When the function is activated, press and hold the **Remote** button for 3 seconds.

### Downloaded Cycle

You can download new and specialized cycles that are not included in the standard cycles on the appliance.

Appliances that have been successfully connected can download a variety of specialty cycles specific to the appliance.

Once cycle download is completed in the appliance, the product keeps the downloaded cycle until a new cycle is downloaded.

**NOTE**

- Only one downloaded cycle can be stored on the appliance at a time.

### Cloud Cycle

Use the **LG ThinQ** app to start cycles with various options. Cloud cycles are deleted from the appliance once the power is turned off.

## Radio Equipment Specifications

| Type | Operating Frequency Range | Output Power (Max.) |
|---|---|---|
| Wireless LAN | 2400 MHz - 2472 MHz | < 1 W |
| Bluetooth† | 2400 MHz - 2483.5 MHz | |

† This feature is only available on some models.

## FCC Notice

The following notice covers the transmitter module contained in this product.

This equipment has been tested and found to comply with the limits for a Class B digital device, pursuant to Part 15 of the FCC Rules. These limits are designed to provide reasonable protection against harmful interference in a residential installation. This equipment generates, uses, and can radiate radio frequency energy and, if not installed and used in accordance with the instructions, may cause harmful interference to radio communications. However, there is no guarantee that interference will not occur in a particular installation. If this equipment does cause harmful interference to radio or television reception, which can be determined by turning the equipment off and on, the user is encouraged to try to correct the interference by one or more of the following measures:

- Reorient or relocate the receiving antenna.
- Increase the separation between the equipment and the receiver.
- Connect the equipment to an outlet on a circuit different from that to which the receiver is connected.
- Consult the dealer or an experienced radio/TV technician for help.

This device complies with part 15 of the FCC Rules. Operation is subject to the following two conditions:

(1) This device may not cause harmful interference and

(2) This device must accept any interference received, including interference that may cause undesired operation.

Any changes or modifications in construction of this device which are not expressly approved by the party responsible for compliance could void the user's authority to operate the equipment.

### FCC RF Radiation Exposure Statement

This equipment complies with FCC radiation exposure limits set forth for an uncontrolled environment. This transmitter must not be co-located or operating in conjunction with any other antenna or transmitter.

This equipment should be installed and operated with a minimum distance of 20 cm (7.8 inches) between the antenna and your body. Users must follow the specific operating instructions for satisfying RF exposure compliance.

## Open Source Software Notice Information

To obtain the source code that is contained in this product, under GPL, LGPL, MPL, and other open source licenses that have the obligation to disclose source code, and to access all referred license terms, copyright notices, please visit https://opensource.lge.com.

LG Electronics will also provide open source code to you for a charge covering the cost of performing such distribution upon email request to opensource@lge.com.

This offer is valid to anyone in receipt of this information for a period of three years after our last shipment of this product.

# Smart Diagnosis™ Function

Use this feature to help you diagnose and solve problems with your appliance.

**NOTE**

- For reasons not attributable to LGE's negligence, the service may not operate due to external factors such as, but not limited to, Wi-Fi unavailability, Wi-Fi disconnection, local app store policy, or app unavailability.
- The feature may be subject to change without prior notice and may have a different form depending on where you are located.

## Using LG ThinQ to Diagnose Issues

If you experience a problem with your Wi-Fi equipped appliance, it can transmit troubleshooting data to a smartphone using the **LG ThinQ** application.

- Launch the **LG ThinQ** application and select the **Smart Diagnosis**™ feature in the menu. Follow the instructions provided in the **LG ThinQ** application.

## Using Audible Diagnosis to Diagnose Issues

Follow the instructions below to use the audible diagnosis method.

- Launch the **LG ThinQ** application and select the **Smart Diagnosis**™ feature in the menu. Follow the instructions for audible diagnosis provided in the **LG ThinQ** application.

**1** Press the **Power** button to turn on the appliance.

- Do not press any other buttons.

**2** Hold the mouthpiece of your phone in front of the appliance.

- Washer: Hold the phone to the right of the **Start/Pause** button.
- Dryer: Hold the phone to the left of the **Power** button.

**3** Press and hold the **Steam**+**Extra Rinse** (Washer) / **More Time**+**Wrinkle Care** (Dryer) buttons for **3 seconds** or until the audible tones start. Hold the smartphone mouthpiece to the logo until the data transfer is complete.

- Keep the smartphone in place until the data transfer has finished. Time remaining for data transfer is displayed.

**4** After the data transfer is complete, the diagnosis will be displayed in the application.

**NOTE**

- For best results, do not move the smartphone while the tones are being transmitted.

# MAINTENANCE

**WARNING**

- To reduce the risk of fire, electric shock, or injury to persons, read this entire owner's manual, including the SAFETY INSTRUCTIONS, before operating this appliance.
- Unplug the appliance before cleaning to avoid the risk of electric shock. Failure to follow this warning can cause serious injury, fire, electric shock, or death.
- Do not use volatile substances (benzene, paint thinner, alcohol, acetone, etc.), abrasive cleaners, or detergents with strong chemical components when cleaning the appliance. Doing so may cause discoloration or damage to the appliance, or may cause a fire.
- Certain internal parts are intentionally not grounded and may present a risk of electric shock only during servicing. Service personnel - Do not contact the following parts while the appliance is energized: pump, valve, motor, control board.

## Washer

### Regular Cleaning

#### Care after Wash

After the cycle is finished, wipe the door and the inside of the door seal to remove any moisture.

- Wipe the body of the washer with a dry cloth to remove any moisture.
- Leave the door open to dry the drum interior.

**WARNING**

- Make sure children and pets do not climb into the drum. Engage the **Control Lock** feature if needed to prevent children from accidentally starting a wash cycle.

#### Cleaning the Exterior

Proper care of your washer can extend its life.

**Door:**
Wash with a damp cloth on the outside and inside and then dry with a soft cloth.

**Exterior:**

- Immediately wipe off any spills.
- Wipe with a damp cloth.
- Do not touch the surface or the display with sharp objects.

### Cleaning the Drum

Over time, residue may build up in the drum, leading to mildew or a musty odor. Run the **Tub Clean** cycle **monthly** to remove residue and prevent odor.

**NOTE**

- Make sure to run the **Tub Clean** cycle only when the drum is empty. Never load laundry while using this cycle. The laundry may be damaged or contaminated with cleaning products.
- Run the cycle more often under heavy use conditions or if odor is already present.
- If mildew or musty smell already exists, run this cycle once a week for three consecutive weeks.

**1** Remove any clothing from the drum.

**2** Add cleaning agents.

| Cleaner | Instructions |
|---|---|
| Drum cleaner | Add to main detergent compartment of detergent dispenser |
| Lime scale remover | |
| Liquid chlorine bleach | Add to bleach compartment of detergent dispenser. |
| Powdered cleaner | Pull out liquid detergent cup before adding to main detergent compartment |
| Cleaning tablets | Place directly into the washer drum. |

- For other drum cleaning products, follow the cleaner manufacturer's instructions and recommendations.
- Do not exceed the maximum fill line when adding bleach or powdered cleaners. Powdered cleaners may remain in the drum after cleaning.

**3** Close the door and press the **Power** button.

**4** Select the **Tub Clean** cycle. (On some models, press or press and hold the button with **Tub Clean** on it.) Press the **Start/Pause** button to begin the cycle.

**5** After the cycle ends, open the door and allow the drum interior to dry completely.

**WARNING**

- Make sure children and pets do not climb into the drum. Engage the **Control Lock** feature if needed to prevent children from accidentally starting a wash cycle.

**NOTE**

- If you use a descaler or drum cleaner during the **Tub Clean** cycle, run the **Quick Wash** cycle to rinse the washer drum before running your next wash cycle.

### Automatic Alert for Tub Clean

When the power is on and the tcL message blinks on the display, it means the washer drum needs cleaning. Use the **Tub Clean** cycle to clean the washer drum. The frequency of the automatic alert's appearance depends on how often the washer is used. However, the message will generally appear every one to two months.

## Removing Mineral Buildup

In areas with hard water, mineral scale can form on internal components of the washer. Periodically clean the mineral buildup on the internal components to extend the lifespan of the washer. Use of a water softener is recommended in areas with hard water.

- Use a descaler to remove visible mineral buildup on the washer drum.
- After descaling, always run the **Tub Clean** cycle before washing clothing.
- Mineral scale and other spots may be removed from the stainless steel drum using a soft cloth soaked in stainless steel cleaner.
- Do not use steel wool or abrasive cleaners.

### Leaving the Door Open

After you finish using the appliance, leave the door open overnight to allow air to circulate and dry the drum. This helps prevent odors. In high-traffic areas or where space is tight, use the magnetic door stop to keep the door slightly ajar. To use, gently close the door until the magnet just contacts the inner door frame.

## Cleaning the Dispenser Drawer

Leaving detergent in the detergent dispenser drawer for an extended period of time or using the washer for a long period of time may cause the build-up of residue in the detergent dispenser drawer. Remove and clean the detergent dispenser drawer **once or twice a month**.

**WARNING**

- Do not spray water inside the washer. Doing so may cause fire or electric shock.

**1** Turn off the washer, and unplug the power cord.

**2** Pull the drawer straight out until it stops.

**3** Press down hard on the disengage button ❶ and pull the drawer completely out.

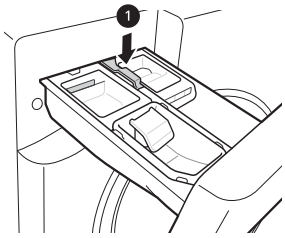


**4** Remove the inserts from the drawer.

5 Clean the inserts and drawer with warm water.

- Use a soft cloth or brush to clean and to remove any residue.
- Do not use soap when cleaning the drawer and inserts.

6 Wipe off any moisture with a dry towel or cloth after cleaning.

7 To clean the drawer opening, use a small, non-metal brush to clean the recess. Remove all residue from the upper and lower parts of the recess.

8 Replace the drawer.

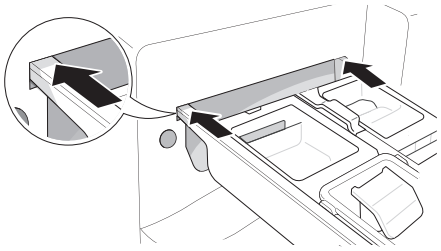

## Cleaning the Door Seal

Clean the door seal **once a month** to prevent build-up of dirt.

**CAUTION**

- Cleaning the door seal with undiluted bleach may cause malfunction of the door seal and washer parts. You must add water to the bleach before using it.

1 Wear rubber gloves and protective goggles.

2 Dilute 3/4 cup (177 mL) of liquid chlorine bleach in 1 gallon (3.8 L) of water.

3 Wipe around the door seal.

- Soak a sponge or a soft cloth in this diluted solution and wipe all around the door seal.

4 Wipe up any moisture with a dry towel or cloth after cleaning.

5 Leave the door open to allow the door seal to dry completely.

## Cleaning the Water Inlet Filters

If the washer does not fill properly, an error message will appear on the display. The inlet valve filter screens could be clogged by hard water scale, sediment in the water supply, or other debris.

**WARNING**

- The inlet screens protect the delicate parts of the inlet valve from being damaged by particles that could enter the valves with the water supply. Operating the washer with these filters removed could cause a valve to open continuously, resulting in flooding and/or property damage.

**CAUTION**

- Do not use the washer without the inlet filters. Doing so will cause leaks and malfunction.
- If you use the washer in an area with hard water, the inlet filter may clog due to lime buildup and require more frequent cleaning.

1 Turn off the washer, and unplug the power cord.

2 Turn off hot and cold water faucets.

3 Unscrew the hot and cold water hoses from the back of the washer.

4 Remove the filters from the water valves carefully.

- Use pliers to pull out the filters from the water valves.

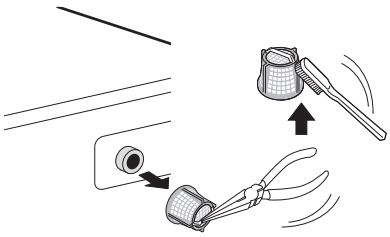

**5** Remove foreign objects and soak the filters in white vinegar or a lime scale remover.

- If using a lime scale remover, follow the manufacturer's instructions. Be careful not to damage the filters while cleaning them.

**6** Rinse filters thoroughly and press them back into place.

**7** Flush then reattach the water hoses.

- Before reattaching the water inlet hoses, flush them by running several gallons of water through them into a bucket or drain, preferably with the faucets wide open for maximum flow.

**NOTE**

- An IE error message may blink on the display when the water pressure is low or an inlet filter is clogged with dirt. Clean the inlet filter.

## Cleaning the Drain Pump Filter

The washer fails to drain if the drain pump filter is clogged. Periodically clean the drain filter to prevent clogging with foreign objects.

**WARNING**

- Opening the drain filter will result in water overflowing if there is water in the drum. Use a bucket if the drum is not completely drained before you open the drain filter.
- Using the washer without the drain filter or with an incorrectly assembled drain filter may cause leaks or malfunction of the washer.

**1** Turn off the washer, and unplug the power cord.

**2** Open the drain pump filter cover.

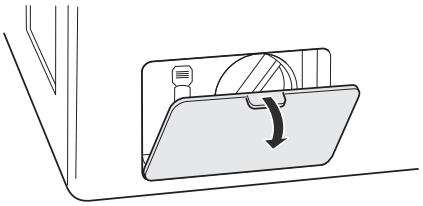

**3** Drain any remaining water.

- Unclip the drain hose and remove the plug from the drain hose to drain the remaining water.

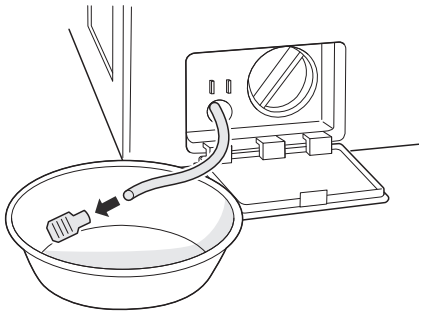

**4** Remove the pump filter.

- Twist the pump filter counterclockwise to remove.

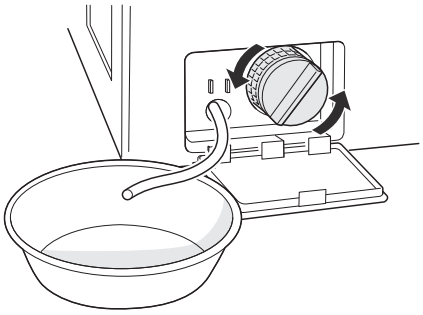

**5** Clean the pump filter and opening.

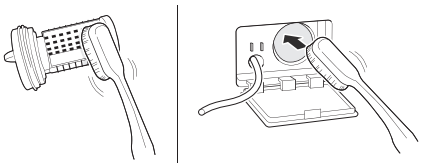

**6** Reassemble the plug onto the drain hose and reclip the drain hose.

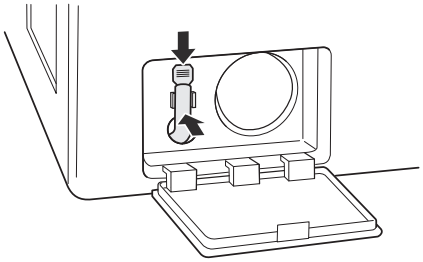

**7** Insert the drain pump filter and twist it clockwise.

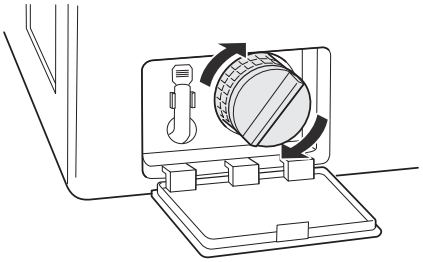

**8** Close the drain pump filter cover.

**NOTE**

- An OE message blinks on the display when the drain pump filter is clogged with dirt. Clean the drain pump filter.

## Care in Cold Climates

### Storing the Appliance

If the washer will not be used for an extended period of time and is in an area that could be exposed to freezing temperatures, follow these steps to protect the washer from damage.

**NOTE**

- Make sure the drum is empty before following these steps.

**1** Turn off the washer, and unplug the power cord.

**2** Turn off the water faucets.

**3** Disconnect the water inlet hoses. Drain any water from the hoses.

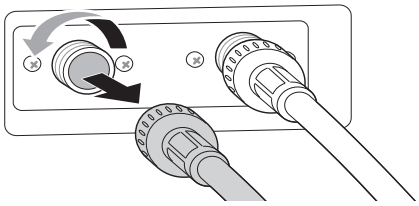

**4** Plug the power cord into a properly grounded electrical outlet.

**5** Add 1 gallon of nontoxic recreational vehicle (RV) antifreeze to the empty drum and close the door.

- Never use automotive antifreeze.

**6** Turn on the washer and press the **Spin** button.

**7** Press the **Start/Pause** button to start the drain pump for **1 minute**.

- This will expel some of the antifreeze, leaving enough to protect the washer from damage.

**8** Turn off the washer and unplug the power cord.

**9** Dry the drum interior with a soft cloth, and close the door.

**10** Store the washer in an upright position.

**11** Remove the inserts from the dispenser. Drain any water in the compartments and let them dry.

**12** To remove the antifreeze from the washer after storage, run the **Quick Wash** cycle using detergent.

- Do not add laundry to this cycle.

### When the Water Inlet Hoses Are Frozen

**1** Turn off the washer, and unplug the power cord.

**2** Turn off the faucets connected to the water inlet hoses.

3 Pour hot water on the frozen faucets to thaw the water inlet hoses and remove the water inlet hoses.

4 Immerse the water inlet hoses in hot water to thaw them.

5 Reconnect the water inlet hoses to the water inlets of the washer and to the faucets.

- See **Connecting the Water Inlet Hoses** for details.

6 Turn on the faucets.

7 Press the **Power** button to turn on the washer.

8 Press the **Spin** button to operate spin only cycle for draining and spinning.

9 Press the **Start/Pause** button.

## When the Drain Hose is Frozen

1 Pour hot water in the washer drum and close the door.

2 Wait for **1 - 2 hours**.

3 Press the **Power** button.

4 Press the **Spin** button to operate spin only cycle for draining and spinning.

5 Press the **Start/Pause** button to make sure the water drains.

# Dryer

## Regular Cleaning

### Cleaning the Exterior

Proper care of your appliance can extend its life. The outside of the appliance can be cleaned with warm water and a mild, nonabrasive household detergent. Immediately wipe off any spills with a soft, damp cloth.

**NOTE**

- Do not use methylated spirits, solvents, or similar products.
- Never use steel wool or abrasive cleansers; they can damage the surface.

### Cleaning the Interior

- Wipe around the door opening and seal with a soft, damp cloth to prevent lint and dust buildup that could damage the door seal.
- Clean the window with a soft cloth dampened with warm water and a mild, nonabrasive household detergent. Then wipe dry.
- The stainless steel drum can be cleaned with a conventional stainless steel cleaner, used according to the manufacturer's specifications. Never use steel wool or abrasive cleansers; they may scratch or damage the surface.

### Cleaning Around and Under the Appliance

Vacuum lint and dust from around the dryer and underneath it regularly.

### Leaving the Door Open

After you finish using the appliance, leave the door open overnight to allow air to circulate and dry the drum. This helps prevent odors. In high-traffic areas or where space is tight, use the magnetic door stop to keep the door slightly ajar. To use, gently close the door until the magnet just contacts the inner door frame.

## Cleaning the 3-Piece Lint Filter

**⚠ CAUTION**

- Refer to the following instructions for proper cleaning of the lint filter. Failure to do so can cause lint buildup on the condenser that can affect the drying performance.

**NOTE**

- Cleaning the lint filter will reduce drying time and energy consumption and prevent unnecessary malfunctions.
- Unload all of the clothes from the appliance before pulling out the lint filter.
- If you have pets or use dryer sheets, perform a thorough cleaning of the lint filters more often, using a vacuum cleaner or under running water.
- After cleaning the 3-piece lint filter, insert it back into place. The appliance will not operate without the lint filter in place.

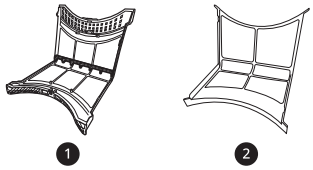


❶ **Inner Filter Assembly (2 Filters)**

- Clean both inner filters after every cycle.

❷ **Outer Filter**

- Clean the outer filter after drying 10 times or when the lint has accumulated on the outer filter.

### Cleaning the Inner Filter Assembly

**1** Pull out the inner filter assembly from the outer filter.

- Open the inner filter assembly by unfolding it in the direction of the arrow.
- Remove the small filter at the base by sliding it out of the grooves on each side.

**2** Use your fingers to get most of the lint off the filters. To clean off residual lint, use a vacuum cleaner or rinse under running water.

- The filters must be completely dry before using or they could cause an unpleasant odor.

**⚠ CAUTION**

- Do not tap the large inner filter repeatedly as the built-in magnet may dislodge and cause a malfunction.

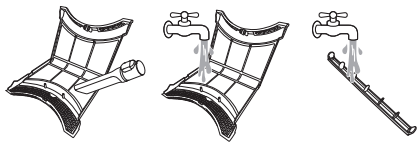

**3** After drying both inner filters completely reassemble the small filter by sliding the tabs at each side into the grooves on the large filter. Close the filter assembly by folding the sides back together and snapping them closed in the center.

- Ensure the left and right sides of the inner filter assembly are closed properly.

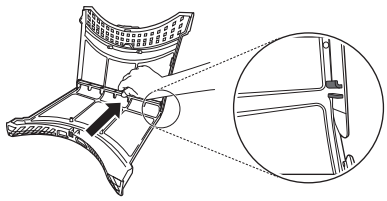

**4** Insert the inner filter assembly into the outer filter.

### Cleaning the Outer Filter

**1** Remove the dust or lint around the filter inlet.

**⚠ CAUTION**

- If the lint drops into the filter inlet, it may affect the drying performance and increase drying time.

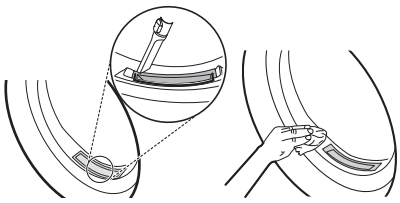

**2** Pull out the outer filter.

**3** Remove the inner filter.

**4** Open the outer filter by grasping the top edge and unfolding the sides.

**5** Remove the residual lint with a vacuum cleaner or by washing under running water.

- If washed, allow the filter to dry completely before use. Failure to do so may cause an odor.

**⚠ CAUTION**

- Do not tap the filter repeatedly as the built in magnet may dislodge and cause a malfunction.

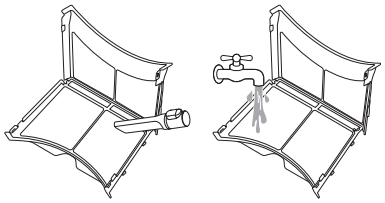

**6** Reassemble the filters and reinsert them.

**⚠ CAUTION**

- Do not load or remove any clothes when the lint filter is not in place. The clothes can drop into the filter inlet and may cause the appliance to malfunction.
- For best results, always use all 3 parts of the 3-piece filter.

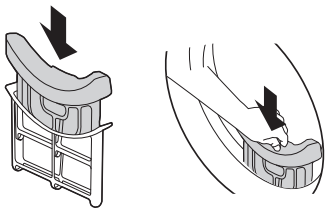

## Using Drum Care Feature

Run the **Drum Care** cycle periodically to prevent unpleasant odors in the drum.

**⚠ CAUTION**

- Remove all of the clothes from the appliance.

**1** Turn on the appliance.

**2** Launch the **LG ThinQ** application and select the **Drum Care** cycle in the Cloud cycle.

**3** Press the **Start/Pause** button.

- This function operates for about 3 hours.

**4** Open the dryer door and leave it open to allow air to circulate in the drum.

**WARNING**

- For safety reasons, do not allow children or animals to climb into the appliance. Doing so could cause damage or injury.

## Using Condenser Care Feature

The appliance automatically cleans built-up lint off of the condenser using water condensed from the drying process. If needed, the condenser can also be cleaned manually.

**CAUTION**

- Remove all of the clothes from the appliance.
- The condenser is cleaned automatically.
- If you want to clean it manually, contact the service center.
- If the product is disassembled arbitrarily, resulting in a malfunction or injury, LG does not assume responsibility and free service is not provided.

**1** Open the dryer door and pull out both the inner and outer filters.

**2** Carefully pour 34 oz. (1 liter) of clean water into the lint filter compartment and then reinsert both lint filters.

- Do not pour the water quickly as it will spill out.
- Pouring more that 51 oz. (1.5 liters) of water into the compartment will cause water to leak out.

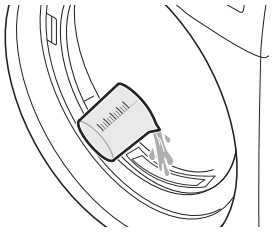

**3** Turn on the appliance.

**4** Press the **Condenser Care** button.

**5** Press the **Start/Pause** button to start cleaning the condenser.

- The condenser cleaning process takes about 1 hour.

**6** Open the dryer door after the cleaning is finished and leave it open to allow air to circulate and thoroughly dry the drum.

**WARNING**

- For safety reasons, do not allow children or animals to climb into the appliance. Doing so could cause damage or injury.

## Care in Cold Climates

### Thawing out the Accessories

**CAUTION**

- Wear gloves and take care to avoid burning yourself with hot water.

#### Frozen Water in Drain Hose

Wrap the drain hose in a towel soaked in hot water (140 °F / 60 °C).

### Running the Thawing Mode

**1** Turn on the appliance and press and hold the **More Time** and **Condenser Care** buttons at the same time for 3 seconds.

**NOTE**

- Only the **Power** and **Start/Pause** buttons work when the thawing mode is activated.
- The thawing time cannot be changed manually.
- To deactivate the thawing mode, turn off the appliance.

**2** Press the **Start/Pause** button to start the thawing mode.

- Actual thawing time varies depending on the installation environment such as

installation location and ambient temperature of the appliance.

**3** When thawing is complete, dry clothes as usual.

## Thawing out the Appliance Manually

**1** Open the dryer door and pull out both the inner and outer filters.

**2** Carefully pour 34 oz. (1 liter) of hot water at 140 °F / 60 °C into the lint filter compartment and then reinsert both lint filters.

**CAUTION**

- Pouring more that 51 oz. (1.5 liters) of water into the compartment will cause water to leak out.
- Wear gloves and use care when pouring hot water. 140 °F / 60 °C water can cause scalding or burns. Using water that is hotter than that can cause the appliance to malfunction.

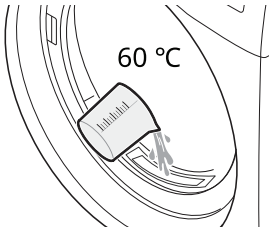


**3** Turn on the appliance and run the **Normal** cycle for about 30 seconds. Then wait about 30 minutes.

**4** Run the **Normal** cycle again. Check if the OE message appears within 10 minutes of running the appliance.

- If the OE message appears go to step 2 and repeat procedure.
- If the OE message does not appear, the thawing process is done.

**5** When thawing is complete, dry clothes as usual.

# TROUBLESHOOTING

The appliance is equipped with an automatic error-monitoring system to detect and diagnose problems at an early stage. If the appliance does not function properly or does not function at all, check the following before you call for service.

If you want detailed information and video, you can visit www.lg.com for the troubleshooting page.

## Washer

### FAQs: Frequently Asked Questions

**Q: Why does my washer make loud banging noises while it is filling with water?**

**A:** This is actually a problem with the plumbing in your home. When the water valve in the washer shuts off, it can cause pipes in your home to move, resulting in a loud banging noise. This effect, called water hammer, can be reduced by installing an item called a water hammer arrestor. Add-on arrestors can be purchased through your local hardware or home improvement store.

**Q: Why is there so little water in my washer? How can it clean the clothes?**

**A:** HE (High-Efficiency) washers are designed to properly wash your laundry while using a minimum amount of water and energy. Because the water volume is low, the small amount of detergent used is more concentrated in the water, resulting in excellent cleaning performance.

**Q: When I press a button, why does my washer beep and then nothing happens?**

**A:** The **Control Lock** feature is turned on. To turn it off, turn on the washer, then press and hold the button that has **Control Lock** on or under it for **3 seconds**.

**Q: Where should I pour the powdered laundry products when doing my laundry?**

**A:** If you are using powdered laundry detergent, load it in the main detergent dispenser after removing the liquid detergent insert. Powdered laundry agents or powdered color safe bleach should be put directly into the drum. These products can be put in the empty drum before loading or on top of the laundry after loading the washer.

### Error Messages

| Problem | Possible Cause & Solution |
|---|---|
| IE<br>**INLET ERROR** | **Water supply faucets are not fully open.**<br>• Make sure that the water faucets are fully open. |
| | **Water inlet hoses are kinked, pinched, or crushed.**<br>• Make sure that the hoses are not kinked, pinched or crushed behind or under the washer. Be careful when moving the washer during cleaning or maintenance. |
| | **Water inlet filters are clogged.**<br>• Clean the inlet filters. See **MAINTENANCE**. |
| | **Water supply pressure to faucet or house is too low.**<br>• Check another faucet in the house to make sure that household water pressure is adequate and flow is not restricted.<br>• Disconnect the water inlet hoses from the washer and run a few gallons of water through the hoses to flush out any dirt.<br>• If flow is too low, contact a plumber to have the water supply lines repaired. |

| Problem | Possible Cause & Solution |
|---|---|
| I E<br>**INLET ERROR** | **Water supply connected with leak-limiting hoses.**<br>• The use of hoses designed to limit leaks is not recommended. Leak limiting hoses can trip falsely and prevent the washer from filling. |
| UE<br>**UNBALANCE ERROR** | **The load is too small.**<br>• Add additional items to allow the washer to balance the load. |
| | **Heavy articles are mixed with lighter items.**<br>• Always try to wash articles of somewhat similar weight to allow the washer to evenly distribute the weight of the load for spinning. |
| | **The load is out of balance.**<br>• Manually redistribute the load if articles have become tangled, preventing the automatic rebalancing from working properly. |
| dE, dE 1, dE2, dE4<br>**DOOR OPEN ERROR** | **The door is not secured.**<br>• Close and secure the door. If the message keeps appearing, unplug the power cord and call for service. |
| OE<br>**WATER OUTLET ERROR** | **Drain hose is kinked, pinched, or clogged.**<br>• Make sure that the drain hose is free of clogs or kinks and is not pinched behind or under the washer. |
| | **The end of the drain hose is more than 96 inches (2.4 m) above the bottom of the washer.**<br>• Move the end of the drain hose so that it is lower than **96 inches (2.4 m)**. |
| tE<br>**TEMPERATURE SENSOR ERROR** | **Control error.**<br>• Unplug the power cord and call for service. |
| FE<br>**OVERFLOW ERROR** | **Water level is too high due to a faulty water valve.**<br>• Close the water faucets, unplug the washer, and call for service. |
| PE<br>**PRESSURE SENSOR ERROR** | **The water level sensor is not working correctly.**<br>• Close the water faucets, unplug the washer, and call for service. |
| LE<br>**MOTOR LOCKED ERROR** | **A motor error has occurred.**<br>• Allow the washer to stand for 30 minutes and then restart the cycle.<br>• If the error code is still displayed, call for service. |
| Sud<br>**OVERSUDSING DETECTION** | **Oversudsing of detergent**<br>• Do not add more than the manufacturer’s recommended amount of detergent.<br>• If too many suds are detected during spinning, the washer stops to help prevent leaking. |
| PF<br>**POWER FAILURE** | **Power failure or inadequate electrical service may have occurred during operation.**<br>• Press the **Start/Pause** button to restart the cycle. |
| FF<br>**FROZEN ERROR** | **Inlet hose, drain hose or drain pump is frozen.**<br>• See **Care in Cold Climates**. |
| CL<br>**CONTROL LOCK FUNCTION** | **The Control Lock function is on to prevent anyone from changing cycles or operating the washer.**<br>• Turn off the **Control Lock** function in the control panel. See **Control Lock** under **Options and Extra Functions**. |
| tcL<br>**TUB CLEAN ALARM** | **It is time to run the Tub Clean cycle.**<br>• This is not an error code. It indicates that the **Tub Clean** cycle is running or needs to be run to clean the washer drum. |

| Problem | Possible Cause & Solution |
|---|---|
| uS<br>**VIBRATION SENSOR ERROR** | **Vibration sensor malfunctions.**<br>• Call for service. |
| bU<br>**VIBRATION ERROR** | **Inner drum damage was detected.**<br>• Call for service. |

## Noises

| Problem | Possible Cause & Solution |
|---|---|
| **Clicking** | **Door lock sounds when the door locks or unlocks.**<br>• Normal operation |
| **Spraying or hissing** | **Water spraying or circulating during the cycle**<br>• Normal operation |
| **Humming or Gurgling** | **Drain pump is pumping water from the washer at times during a cycle.**<br>• Normal operation |
| **Water sloshing** | **A liquid in the balance ring around the pulsator helps the basket spin smoothly.**<br>• Normal operation |
| **Water being added after the washer has already begun to operate** | **The washer adapts to the load size and type to add more water to the cycle as needed.**<br>• Normal operation |
| | **The wash load may be unbalanced. If the washer senses that the load is unbalanced, it will stop and refill to redistribute the load.**<br>• Normal operation |
| | **The washer may be diluting laundry additives to add to the wash load.**<br>• Normal operation |
| **Rattling and clanking noise** | **Foreign objects, such as keys, coins, or safety pins may be in drum or pump.**<br>• Stop the washer, check the drum and the drain filter for foreign objects.<br>• If noise continues after the washer is restarted, call for service. |
| **Thumping sound** | **Heavy wash loads may produce a thumping sound.**<br>• This is normal, but if the sound continues, the washer is probably out of balance. Stop and redistribute wash load. |
| | **Wash load may be out of balance.**<br>• Pause the cycle and redistribute the load after the door unlocks. |
| **Vibrating noise** | **Packaging materials were not removed.**<br>• See **Unpacking and Removing Shipping Material** in **INSTALLATION**. |
| | **Wash load may be unevenly distributed in the drum.**<br>• Pause the cycle and redistribute the load after the door unlocks. |
| | **Not all leveling feet are resting firmly and evenly on the floor.**<br>• See **Leveling the Appliance** in **INSTALLATION**. |
| | **Floor is not rigid enough.**<br>• Make sure that the floor is solid and does not flex. See Flooring in **INSTALLATION**. |
| **Squeaking noise** | **Packaging materials were not removed.**<br>• See **Unpacking and Removing shipping Material** in **INSTALLATION**. |

| Problem | Possible Cause & Solution |
|---|---|
| **Banging noise when the washer is filling with water. (Water hammer)** | **Plumbing in the home moves or flexes when the water valves in the washer shut off.**<br>• Water hammer is not caused by a defect in the washer. Install water hammer arrestors (purchased separately at hardware or home improvement store) between the fill hose and the washer for best results. |
| | **Household water supply pressure is very high.**<br>• Adjust household water supply regulator to a lower pressure or contact a plumber. |

## Operation

| Problem | Possible Cause & Solution |
|---|---|
| **Water Leaking** | **Hoses are not connected correctly.**<br>• Check hoses and connectors for leaks, cracks, and splits.<br>• Check and tighten hose connections. |
| | **House drain pipes are clogged.**<br>• The washer pumps out water very rapidly. Check for water backing up out of the drain pipe during drain. If water is seen coming out of the drain, check for proper drain hose installation and check for restrictions in the drain.<br>• Contact a plumber to repair drain pipe. |
| | **Drain hose has come out of the drain connector or is not inserted far enough.**<br>• Tie drain hose to inlet hose or standpipe to prevent it from coming out during drain.<br>• For smaller drain pipes, insert the drain hose into the pipe as far as the drain hose flange. For larger drain pipes, insert the drain hose into the pipe 1 - 2 inches past the flange. |
| | **Oversudsing of detergent**<br>• Oversudsing may create leaks, and may be caused by the type and amount of detergent used. HE (High-Efficiency) detergent is the only detergent recommended. The normal amount of detergent to use is 1/4 to 1/2 of the maximum amount recommended by the detergent manufacturer.<br>• Always reduce the amount of detergent if the load is small or lightly soiled, or if the water is very soft.<br>• Never use more than the maximum amount recommended by the detergent manufacturer. |
| **Excessive sudsing** | **Too much detergent or incorrect detergent**<br>• HE detergents are formulated specifically for HE (High-Efficiency) washers and contain suds reducing agents. Only use detergent with the HE (High-Efficiency) logo.<br>• For detergent quantities refer to **Detergent Use** in **OPERATION**. If sudsing or detergent residue continues to be an issue, add an extra rinse. |
| **Washer will not turn on.** | **Power cord is not properly plugged in.**<br>• Make sure that the plug is plugged securely into a grounded, 3-prong, 120-VAC, 60 Hz outlet. |
| | **House fuse is blown, circuit breaker has tripped, or power outage has occurred.**<br>• Reset circuit breaker or replace fuse. Do not increase fuse capacity. If the problem is a circuit overload, have it corrected by a qualified election. |
| **Wash cycle time is longer than usual.** | **The washer automatically adjusts the wash time for the amount of laundry, water pressure and other operating conditions.**<br>• This is normal. The washer adjusts cycle time automatically to provide optimal results for the selected cycle. The time remaining shown in the display is only an estimate. Actual time may vary. |

| Problem | Possible Cause & Solution |
|---|---|
| **Incomplete or no dispensing of detergent** | **Detergent compartments clogged from incorrect filling.**<br>• Make sure that detergent and additives are put into the correct dispenser compartments.<br>• For all detergent types, always make sure that the dispenser drawer is fully closed before the start of the cycle. |
| | **Too much detergent used.**<br>• Make sure that the suggested amount of detergent is used according to the manufacturer's recommendations. You may also dilute the detergent with water to the maximum fill line on the compartment to avoid clogging. Use only HE (High-Efficiency) detergent.<br>**NOTE**<br>• Always use as little detergent as possible. HE (High-Efficiency) washers need very little detergent to achieve optimum results. Using too much detergent will cause poor wash and rinse performance and may contribute to odors in the washer. |
| | **Insufficient water supply**<br>• Make sure that both hot and cold water faucets are turned on all the way. |
| | **Normal residue**<br>• It is normal for a small amount of detergent to remain in the dispenser. If this residue builds up, it can interfere with normal dispensing of detergents. Refer to the cleaning instructions. |
| **Washer will not operate.** | **Control panel has powered off due to inactivity.**<br>• This is normal. Press the **Power** button to turn on the washer. |
| | **Washer is unplugged.**<br>• Make sure that the power cord is plugged securely into an electrical outlet. |
| | **Water supply is turned off.**<br>• Turn both hot and cold faucets fully on. |
| | **Controls are not set properly.**<br>• Make sure that the cycle was set correctly, close the door and press the **Start/Pause** button to start the wash cycle. |
| | **Door is open.**<br>• Close the door and make sure that nothing is caught under the door preventing it from closing completely. |
| | **Circuit breaker/fuse is tripped/blown.**<br>• Check house circuit breakers/fuses. Replace fuses or reset breaker. The washer should be on a dedicated branch circuit. |
| | **Start/Pause button was not pressed after the cycle was set.**<br>• Press the **Power** button then reselect the desired cycle and press the **Start/Pause** button. If the **Start/Pause** button is not pressed within a certain time, the washer will be turned off. (The time varies by model, from 4 to 60 minutes.). |
| | **Extremely low water pressure.**<br>• Check another faucet in the house to make sure that household water pressure is adequate. |
| | **Washer is too cold.**<br>• If the washer has been exposed to temperatures below freezing for an extended period of time, allow it to warm up before pressing the **Power** button. Otherwise, the display will not come on. |

| Problem | Possible Cause & Solution |
|---|---|
| **Washer is not filling properly.** | **Filter is clogged.**<br>• Make sure that inlet filters on the fill valves are not clogged. Refer to **Cleaning the Water Inlet Filters** in **MAINTENANCE**. |
| | **Inlet hoses may be kinked.**<br>• Check that inlet hoses are not kinked or clogged. |
| | **Energy efficiency**<br>• This is a High-Efficiency (HE) washer. As a result, the water level settings for this washer may be different than for conventional washer. |
| | **Insufficient water supply**<br>• Make sure that both hot and cold water faucets are turned on all the way. |
| | **Washer door is open.**<br>• Close the door and make sure that nothing is caught under the door preventing it from closing completely. |
| | **Water level is too low.**<br>• The water will not normally cover the clothes. The fill level is optimized for the wash motion to achieve the best wash performance. |
| **Water in the washer does not drain or drains slowly.** | **Drain hose is kinked, pinched, or clogged.**<br>• Make sure that the drain hose is free of clogs or kinks and is not pinched behind or under the washer. |
| | **The end of the drain hose is more than 96 inches (2.4 m) above the bottom of the washer.**<br>• Move the end of the drain hose so that it is lower than 96 inches (2.4 m). |
| **Bleach does not dispense.** | **Bleach dispenser cover is not properly installed (on some models).**<br>• Make sure that the bleach cover is properly installed and snapped into place before the beginning of the cycle. |
| | **Bleach dispenser is dirty or clogged.**<br>• Lift out the bleach dispenser cover and clean out the reservoir. Lint and other foreign debris that are collected inside the dispenser may prevent proper dispensing of the bleach. |
| **Premature dispensing of bleach** | **Bleach dispenser filled for future load.**<br>• You cannot store bleach in the dispenser for future use. The bleach will be dispensed every load. |
| | **Overfilling the bleach dispenser**<br>• Overfilling the bleach dispenser will cause the bleach to dispense immediately, which will damage the laundry or the washer. Always measure bleach, but never fill above the max line on the dispenser. A half cup of bleach is sufficient for most loads. Never use more than 1 cup of bleach. |

## Performance

| Problem | Possible Cause & Solution |
|---|---|
| **Wrinkling** | **Washer is not unloaded promptly.**<br>• Always remove items from the washer as soon as the cycle is complete. |
| | **Washer is overloaded.**<br>• The washer can be fully loaded, but the drum should not be tightly packed with items. The door of the washer should close easily. |

| Problem | Possible Cause & Solution |
|---|---|
| **Wrinkling** | **Hot and cold water inlet hoses are reversed.**<br>• Hot water rinse can set wrinkles in garments. Check the inlet hose connectors. |
| **Staining** | **Bleach or softener dispensed too soon.**<br>• Dispenser compartment was overfilled or closed too quickly, causing the bleach or softener to dispense immediately. Always measure bleach, and never use more than 1 cup. |
| | **Bleach or softener was added directly to the wash load in the drum.**<br>• Always use the dispensers to ensure that laundry products are properly dispensed at the right time in the cycle. |
| | **Washer was not unloaded promptly.**<br>• Always remove items from the washer as soon as possible after the cycle is completed. |
| | **Clothes were not properly sorted.**<br>• Always wash dark colors separately from light colors and whites to prevent discoloration.<br>• Never wash heavily soiled items with lightly soiled items. |
| **Poor stain removal** | **Proper options are not selected.**<br>• Heavier soils and tougher stains may require extra cleaning power. Select the **Heavy Soil** feature to boost the cleaning power of the selected cycle. |
| | **Previously set stains.**<br>• Articles that have previously been washed may have stains that have been set. These stains may be difficult to remove and may require hand washing or pre-treating to aid in stain removal. |
| **Musty or mildewy odor in the washer** | **Incorrect or too much detergent has been used.**<br>• Use only HE (High-Efficiency) detergent in accordance with the manufacturer's instructions. |
| | **Inside of the drum was not cleaned properly.**<br>• Run the **Tub Clean** cycle regularly. |

## Odor

| Problem | Possible Cause & Solution |
|---|---|
| **Odor** | **Some odor is caused by the rubber attached to the washing machine.**<br>• This odor is normal for new rubber and will disappear after the machine has been run a few times. |
| | **If the rubber door gasket and door seal area are not cleaned regularly, odors can occur from mold or foreign substances.**<br>• Be sure to clean the gasket and door seal regularly and check under the door seal for small items when unloading the washer. |
| | **Odors can occur if foreign substances are left in the drainage pump filter.**<br>• Be sure to clean the drainage pump filter regularly. |
| | **Odors can occur if the drainage hose is not properly installed, causing siphoning (water flowing back inside the washing machine).**<br>• When installing the drainage hose, be sure that it doesn't become kinked or blocked. |

# Dryer

## FAQs: Frequently Asked Questions

**Q: When I press a button, why does my dryer beep and then nothing happens?**

A: The **Control Lock** feature is turned on. To turn off **Control Lock**, turn the dryer on, then press and hold the button that has **Control Lock** on or under it for 3 seconds.

**Q: Why does my dryer take so long to dry clothes?**

A: Proper airflow is critical to the efficient operation of clothes dryers. A lint filter which is full of lint or clogged with fabric softener sheet residue can reduce the airflow to the point that the time required to dry clothing will be greatly increased.

**Q: Why does my dryer start by itself every few minutes?**

A: This is how the **Wrinkle Care** feature works. The dryer runs briefly every few minutes for up to 2 hours after the cycle finishes. This feature is designed to help prevent wrinkles from setting in when the dryer is not unloaded immediately after the cycle is finished.

## Error Messages

| Problem | Possible Cause & Solution |
|---|---|
| dE1 / dE2<br>**DOOR OPEN ERROR** | **The door is not secured.**<br>• Close and secure the door. If the message keeps appearing, unplug the power cord and call for service. |
| dE4<br>**DOOR OPEN ERROR** | **Door switch detection is not working properly.**<br>• Unplug the power plug and call for service. |
| tE1 / tE2 / tE3 / tE4<br>**TEMPERATURE ERROR** | **Temperature Sensor has malfunctioned.**<br>• Unplug the power plug and call for service. |
| F1<br>**TEMPERATURE ERROR** | **The temperature inside the drum has risen suddenly.**<br>• Unplug the power plug and call for service. |
| LE1<br>**MOTOR LOCKED ERROR** | **The motor has stopped suddenly.**<br>• Check if the amount of clothing exceeds the maximum load capacity.<br>• Unplug the power plug and call for service. |
| LE2 / AE<br>**COMPRESSOR ERROR** | **The compressor has stopped suddenly.**<br>• Unplug the power plug and call for service. |
| OE<br>**DRAIN PUMP ERROR** | **The drain hose is not connected properly.**<br>• Connect the drain hose properly.<br>• Check if the drain hose is free of clogs or kinks and is not pinched behind or under the dryer. |
| | **The drain pump motor has malfunctioned.**<br>• Unplug the power plug and call for service. |
| | **The temperature at the installation location is below zero.**<br>• The recommended surrounding temperature for installation is 41 - 95 °F (5 - 35 °C). |
| LE3<br>**FAN MOTOR ERROR** | **The fan motor has stopped suddenly.**<br>• Unplug the power plug and call for service. |

| Problem | Possible Cause & Solution |
|---|---|
| IF<br>**FILTER ERROR** | **The appliance is being operated without the lint filter.**<br>• Insert the lint filter completely.<br>• If IF recurs, call for service. |
| PS<br>**POWER SUPPLY ERROR** | **Power cord is connected incorrectly.**<br>• Check the connection of the power cord to the terminal block. |
| [ ]<-> End | **The dryer is paused or the dryer's drum rotates periodically.**<br>• Wrinkle Care option is selected. (on some models)<br>• Turn off the appliance and unload all of the laundry from the appliance. |

## Operation

| Problem | Possible Cause & Solution |
|---|---|
| **The appliance will not turn on.** | **Power cord is not properly plugged in.**<br>• Make sure that the power plug is securely plugged into a grounded outlet matching the appliance's rating plate. |
| | **House fuse is blown, circuit breaker has tripped, or power outage has occurred.**<br>• Reset circuit breaker or replace fuse. Do not increase fuse capacity. If the problem is a circuit overload, have it corrected by a qualified electrician. |
| **The appliance does not heat.** | **House fuse is blown, circuit breaker has tripped, or power outage has occurred.**<br>• Reset circuit breaker or replace fuse. Do not increase fuse capacity. If the problem is a circuit overload, have it corrected by a qualified electrician. |
| | **Selected cycle does not use heat.**<br>• Some cycles default to unheated or air drying. Select a cycle that allows heated drying. |
| **Water leaks.** | **The water container hose or the optional drain hose is not connected correctly.**<br>• Connect the water container hose or the optional drain hose correctly. |
| | **The door is closed while clothes or foreign substance is caught in the door.**<br>• Check if clothes or foreign substance is caught in the door before using the appliance. If water leaks continuously, contact the LG Electronics Customer Information Center. |
| **The appliance runs and pauses by itself after the drying cycle finishes.** | **This is normal operation for the Wrinkle Care option.**<br>• Check to see if the **Wrinkle Care** option has been selected. The option is designed to prevent creases that are formed when the clothes are not unloaded promptly after the drying cycle. When the option is set, the appliance runs for 10 seconds and pauses for 5 minutes. The option runs for up to 2 hours. |
| **Drying ended earlier than the initial control panel time.** | **The clothes are dried according to the Dry level or Dry mode setting.**<br>• If the humidity or temperature in the drum reaches the product setting, the dry cycle may end earlier than the control panel time. |
| **Clothes take too long to dry.** | **Load is not properly sorted.**<br>• Separate heavy items from lightweight items. Larger and heavier items take longer to dry. Light items in a load with heavy items can fool the sensor because the light items dry faster. |
| | **Large and heavy fabrics are loaded.**<br>• Heavy fabrics take longer to dry because they tend to retain more moisture. To help reduce and maintain more consistent drying times for large and heavy fabrics, separate these items into smaller loads of a consistent size. |

| Problem | Possible Cause & Solution |
|---|---|
| **Clothes take too long to dry.** | **Dryer controls are not set properly.**<br>• Use the appropriate control settings for the type of load you are drying. Some loads may require an adjustment of the dry level setting for proper drying. |
| | **Lint filter needs to be cleaned.**<br>• Remove the lint from the filter before every load. With the lint removed, hold the filter up to a light to see if it is dirty or clogged. With some loads that produce high amounts of lint, such as new bath towels, it may be necessary to pause the cycle and clean the filter during the cycle.<br>• On models with a 3-piece lint filter, make sure to check, clean and reinstall both the inner and outer parts of the filter. |
| | **House fuse is blown, circuit breaker has tripped, or power outage has occurred.**<br>• Reset circuit breaker or replace fuse. Do not increase fuse capacity. If the problem is a circuit overload, have it corrected by a qualified electrician. |
| | **The appliance is overloaded.**<br>• Divide extra large loads into smaller loads for better drying performance and efficiency. |
| | **Dryer is a heat-pump model.**<br>• Heat-pump dryer models can take longer to dry clothes. However, compared to a conventional dryer, where the heater uses much more energy than the drum motor, a heat-pump dryer uses a more efficient heat exchanger and will generally use less energy overall, even during long cycles. |
| **Drying time is not consistent.** | **Heat settings, load size, or dampness of clothing is not consistent.**<br>• The drying time for a load will vary depending on the size of the load, the type of fabrics, the wetness of the clothes and the condition of the lint filter. An unbalanced load in the appliance can cause poor spinning, resulting in wetter clothes which will take longer to dry. |

## Performance

| Problem | Possible Cause & Solution |
|---|---|
| **Clothes are wrinkled.** | **Clothes dried too long (overdried).**<br>• Overdrying a load of laundry can lead to wrinkled clothes. Try a shorter drying time or use a lower dry level setting and remove items while they still retain a slight amount of moisture. |
| | **Clothes left in dryer too long after cycle ends.**<br>• Use the **Wrinkle Care** option. This option will tumble the clothes briefly every few minutes for up to 2 hours to help prevent wrinkling. |
| **Greasy or dirty spots on clothes.** | **Fabric softener used incorrectly.**<br>• Check and follow the instructions provided with your fabric softener. |
| | **Clean and dirty clothes are being dried together.**<br>• Use your dryer to dry only clean items. Soil from dirty clothes can transfer to the clean clothes in the same or later loads. |
| | **Clothes were not properly cleaned or rinsed before being placed in the dryer.**<br>• Stains on dried clothes could be stains that were not removed during the washing process. Make sure that clothes are being completely cleaned or rinsed according to the instructions for your washer and detergent. Some difficult soils may require pre-treating prior to washing. |

| Problem | Possible Cause & Solution |
|---|---|
| **Clothes are shrinking.** | **Garment care instructions are not being followed.**<br>• To avoid shrinking your clothes, always consult and follow fabric care instructions. Some fabrics will naturally shrink when washed. Other fabrics can be washed but will shrink when dried in a dryer. Use a low or no heat setting. |
| **Lint on clothes.** | **Lint filter not cleaned properly.**<br>• Remove the lint from the filter before every load. With the lint removed, hold the filter up to a light to see if it is dirty or clogged. If it looks dirty, follow the cleaning instructions in the **MAINTENANCE** section. With some loads that produce high amounts of lint, it may be necessary to clean the filter during the cycle.<br>• On models with a 3-piece lint filter, make sure to check, clean and reinstall both the inner and outer parts of the filter. |
| | **Laundry not sorted properly.**<br>• Some fabrics are lint producers (i.e., a fuzzy white cotton towel) and should be dried separately from clothes that are lint trappers (i.e., a pair of black linen pants). |
| | **Excess static in clothes.**<br>• Use a fabric softener to reduce static electricity. Be sure to follow the manufacturer's instructions. Overdrying a load of laundry can cause a buildup of static electricity. |
| | **The appliance is overloaded.**<br>• Divide extra large loads into smaller loads for drying. |
| | **Tissue, paper, etc., left in pockets.**<br>• Check pockets thoroughly before washing and drying clothes. |
| **Excess static in clothes after drying.** | **Fabric softener is not used or is used incorrectly.**<br>• Use a fabric softener, if available, to reduce static electricity. Be sure to follow the manufacturer's instructions. |
| | **Clothes dried too long (overdried).**<br>• Overdrying a load of laundry can cause a buildup of static electricity. Adjust settings and use a shorter drying time. Select a lower dry level setting, if necessary. |
| | **Drying synthetics, permanent press, or synthetic blends.**<br>• These fabrics are naturally more prone to static buildup. Try using fabric softener, or use a lower dry level setting and/or shorter time settings. |
| **Clothes have damp spots after a dry cycle.** | **Very large load or very small load. Single large item such as a blanket or comforter.**<br>• If items are too tightly packed or too sparse the sensor may have trouble reading the dryness level of the load. Use a **Time Dry** cycle for very small loads.<br>• Large, bulky items such as blankets or comforters can sometimes wrap themselves into a tight ball of fabric. The outside layers will dry and register on the sensors, while the inner core remains damp. When drying a single bulky item, it may help to pause the cycle once or twice and rearrange the item to unwrap and expose any damp areas.<br>• To dry a few remaining damp items from a very large load or a few damp spots on a large item after a sensor cycle has completed, empty the lint trap, and then set a **Time Dry** cycle to finish drying the item(s). |

## Odors

| Problem | Possible Cause & Solution |
|---|---|
| **The appliance has an unpleasant odor.** | **Are you using the appliance for the first time?**<br>• The odor is caused by the rubber material inside the appliance. The odor normal when the appliance is new and disappears after you run several cycles. |

| Problem | Possible Cause & Solution |
|---|---|
| **The appliance has an unpleasant odor.** | **Do you smell an odor during use?**<br>• Do not exceed the manufacturer's recommended amount of detergent when washing clothes. Excess detergent can build up on clothing and cause odors.<br>• Leaving clothes in the washer or dryer after the cycle ends can lead to odors. Unload clothing promptly when the cycle ends.<br>• For ventless models, leave the dryer door open after drying, or use the magnetic door stop (on some models) to keep the door slightly ajar.<br>• If the odor is coming from the washer, follow the instructions in the product manual to clean the washer tub/drum.<br>• Keep both lint filters clean. Clogged or dirty lint filters can cause odors. After cleaning the lint filter, allow it to dry completely before using it.<br>• Periodically run the **Drum Care** and **Condenser Care** cycles following the instructions in the **MAINTENANCE** section. |

# Common

## Wi-Fi

| Problem | Possible Cause & Solution |
|---|---|
| **Trouble connecting appliance and smartphone to Wi-Fi network** | **The password for the Wi-Fi network was entered incorrectly.**<br>• Delete your home Wi-Fi network and begin the connection process again. |
| | **Mobile data for your smartphone is turned on.**<br>• Turn off the **Mobile data** on your smartphone before connecting the appliance. |
| | **The wireless network name (SSID) is set incorrectly.**<br>• The wireless network name (SSID) should be a combination of English letters and numbers. (Do not use special characters.) |
| | **The router frequency is not 2.4 GHz.**<br>• Only a 2.4 GHz router frequency is supported. Set the wireless router to 2.4 GHz and connect the appliance to the wireless router. To check the router frequency, check with your Internet service provider or the router manufacturer. |
| | **The appliance and the router are too far apart.**<br>• If the appliance is too far from the router, the signal may be weak and the connection may not be configured correctly. Move the router closer to the appliance or purchase and install a Wi-Fi repeater. |
| | **During Wi-Fi setup, the app is requesting a password to connect to the product (on certain phones).**<br>• Locate the network name which starts with "LG" under Settings > Networks. Note the last part of the network name.<br>- If the network name looks like LGE_Appliance_XX-XX-XX, enter lge12345.<br>- If the network name looks like LGE_Appliance_XXXX, enter XXXX twice as your password. For example, if the network name appears as LGE_Appliance_8b92, then you would enter 8b928b92 as your password. In this instance, the password is case sensitive and the last 4 characters are unique to your appliance. |

# LIMITED WARRANTY

## USA

### TERMS AND CONDITIONS

**ARBITRATION NOTICE: THIS LIMITED WARRANTY CONTAINS AN ARBITRATION PROVISION THAT REQUIRES YOU AND LG ELECTRONICS (“LG”) TO RESOLVE DISPUTES BY BINDING ARBITRATION INSTEAD OF IN COURT, UNLESS YOU CHOOSE TO OPT OUT. IN ARBITRATION, CLASS ACTIONS AND JURY TRIALS ARE NOT PERMITTED. PLEASE SEE THE SECTION TITLED “PROCEDURE FOR RESOLVING DISPUTES” BELOW.**

Should your LG Washer/Dryer ("Product") fail due to a defect in materials or workmanship under normal and proper use, during the warranty period set forth below, LG will, at its option, repair or replace the Product. This limited warranty is valid only to the original retail purchaser of the Product ("You") and applies only when purchased lawfully and used within the United States including U.S. Territories.

| WASHER WARRANTY PERIOD | | |
|---|---|---|
| **Product** | **Direct Drive Motor (Stator or Rotor)** | **Washer Drum** |
| Parts (internal/ functional parts only) and Labor: One (1) year from the date of original retail purchase, or from the date of delivery as per applicable law | Parts Only: Ten (10) years from the date of original retail purchase, or from the date of delivery as per applicable law<br>You are responsible for any applicable labor cost. | Parts Only: Three (3) years from the date of original retail purchase, or from the date of delivery as per applicable law<br>You are responsible for any applicable labor cost. |

| DRYER WARRANTY PERIOD | | |
|---|---|---|
| **Product** | **Dual Inverter Compressor**<br>**Direct Drive Motor (Stator or Rotor)** | **Dryer Drum** |
| Parts (internal/ functional parts only) and Labor: One (1) year from the date of original retail purchase, or from the date of delivery as per applicable law | Parts only: Ten (10) years from the date of original retail purchase, or from the date of delivery as per applicable law<br>You are responsible for any applicable labor cost. | Parts Only: Three (3) years from the date of original retail purchase, or from the date of delivery as per applicable law<br>You are responsible for any applicable labor cost. |

- Replacement Products and parts are warranted for the remaining portion of the original warranty period or ninety (90) days, whichever is greater.
- Replacement Products and parts may be new, reconditioned, refurbished, or otherwise factory remanufactured.
- Replaced Product or part(s) will be the property of LG.
- Proof of original retail purchase specifying the Product model and date of purchase is required to obtain warranty service under this limited warranty.

**EXCEPT TO THE EXTENT PROHIBITED BY APPLICABLE LAW, ANY IMPLIED WARRANTY OF MERCHANTABILITY OR FITNESS FOR A PARTICULAR PURPOSE ON THE PRODUCT IS LIMITED IN DURATION TO THE DURATION OF THE ABOVE LIMITED WARRANTY. UNDER NO CIRCUMSTANCES SHALL LG OR ITS U.S. DISTRIBUTORS/DEALERS BE LIABLE FOR ANY INDIRECT, INCIDENTAL, CONSEQUENTIAL, SPECIAL, OR PUNITIVE DAMAGES, INCLUDING, WITHOUT LIMITATION, LOST GOODWILL, LOST REVENUES OR PROFITS, WORK STOPPAGE, IMPAIRMENT OF OTHER GOODS, COST OF REMOVAL AND REINSTALLATION OF THE PRODUCT, LOSS OF USE, OR ANY OTHER DAMAGES WHETHER BASED IN CONTRACT, TORT, OR OTHERWISE. LG’S TOTAL LIABILITY, IF ANY, SHALL NOT EXCEED THE PURCHASE PRICE PAID BY YOU FOR THE PRODUCT.**

**SOME STATES DO NOT ALLOW THE EXCLUSION OR LIMITATION OF INCIDENTAL OR CONSEQUENTIAL DAMAGES OR LIMITATIONS ON HOW LONG AN IMPLIED WARRANTY LASTS, SO THE ABOVE EXCLUSIONS OR LIMITATIONS MAY NOT APPLY TO YOU. THIS LIMITED WARRANTY GIVES YOU SPECIFIC LEGAL RIGHTS AND YOU MAY ALSO HAVE OTHER RIGHTS THAT VARY FROM STATE TO STATE.**

## THIS LIMITED WARRANTY DOES NOT COVER:

- Service trips to deliver, pick up, or install, educate how to operate, correct wiring, or correct unauthorized repairs.
- Damage or failure of the Product to perform during power failures and interrupted or inadequate electrical service.
- Damage or failure of the Product caused by leaky or broken water pipes, frozen water pipes, restricted drain lines, inadequate or interrupted water supply or inadequate supply of air.
- Damage or failure of the Product resulting from operating the Product in a corrosive atmosphere or contrary to the Product owner’s manual.
- Damage or failure of the Product caused by accidents, pests and vermin, lightning, wind, fire, floods, acts of nature, or any other causes beyond the control of LG.
- Damage or failure of the Product caused by unauthorized modification or alteration, or if the Product is used for other than the intended purpose, or any water leakage where the Product was not properly installed.
- Damage or failure of the Product caused by incorrect electrical current, voltage, or plumbing codes.
- Damage or failure of the Product caused by transportation, storage, and/or handling, including scratches, dents, chips, and/or other damage to the finish of the Product, unless such damage is reported within one (1) week of delivery.
- Damage or failure of the Product resulting from misuse, abuse, improper installation, repair, or maintenance. Improper repair includes the use of parts not authorized by LG. Improper installation or maintenance includes installation or maintenance contrary to the Product owner’s manual.
- Damage or failure of the Product caused by the use of parts, components, accessories, consumable cleaning products, or any other products or services that were not authorized by LG.
- Damage or missing items to any display or open box Product.
- Refurbished Product or any Product sold “As Is”, “Where Is”, “With all Faults”, or similar disclaimer.
- Products with original serial numbers that have been removed, altered, or cannot be readily determined.
- Increases in utility costs and additional utility expenses.
- Any noises associated with normal operation.
- Products used for other than normal and proper household use (e.g., commercial, business, or industrial settings, including any retail or food service establishments, or any commercial lodging/transient rental setting), or any use contrary to the Product owner's manual.
- Costs associated with removal and reinstallation of the Product for repairs, or the removal and reinstallation of the Product if it is installed in an inaccessible location or not installed in accordance with the Product Owner's manual.
- Accessories, removable components, or consumable parts (e.g. Shelves, door bins, drawers, water/air filters, racks, light bulbs, batteries, etc., as applicable), except for internal/functional parts covered under this limited warranty.

**The cost of repair or replacement under these excluded circumstances shall be borne by You.**

TO OBTAIN WARRANTY SERVICE AND ADDITIONAL INFORMATION

Call 1-800-243-0000 and select the appropriate option from the menu.

Or visit our website at **http://www.lg.com**

Or by mail: LG Electronics Customer Service P.O. Box 240007 Huntsville, AL 35813 ATTN: CIC

## PROCEDURE FOR RESOLVING DISPUTES:

ALL DISPUTES BETWEEN YOU AND LG ARISING OUT OF OR RELATING IN ANY WAY TO THIS LIMITED WARRANTY OR THE PRODUCT SHALL BE RESOLVED EXCLUSIVELY THROUGH BINDING ARBITRATION, AND NOT IN A COURT OF GENERAL JURISDICTION. BINDING ARBITRATION MEANS THAT YOU AND LG ARE EACH WAIVING THE RIGHT TO A JURY TRIAL AND TO BRING OR PARTICIPATE IN A CLASS ACTION.

**Definitions.** For the purposes of this section, references to “LG” mean LG Electronics U.S.A., Inc., its parents, subsidiaries and affiliates, and each of their officers, directors, employees, agents, beneficiaries, predecessors in interest, successors, assigns and suppliers; references to “dispute” or “claim” shall include any dispute, claim or controversy of any kind whatsoever (whether based in contract, tort, statute, regulation, ordinance, fraud, misrepresentation or any other legal or equitable theory) arising out of or relating in any way to the sale, condition or performance of the product or this Limited Warranty.

**Notice of Dispute.** In the event you intend to commence an arbitration proceeding, you must first notify LG in writing at least 30 days in advance of initiating the arbitration by sending a letter to LG at LG Electronics, USA, Inc. Attn: Legal Department- Arbitration 111 Sylvan Avenue, Englewood Cliffs, NJ 07632. You and LG agree to engage in good faith discussions in an attempt to amicably resolve your claim. The notice must provide your name, address, and telephone number; identify the product that is the subject of the claim; and describe the nature of the claim and the relief being sought. If you and LG are unable to resolve the dispute within 30 days, either party may proceed to file a claim for arbitration.

**Agreement to Binding Arbitration and Class Action Waiver.** Upon failure to resolve the dispute during the 30 day period after sending written notice to LG, you and LG agree to resolve any claims between us only by binding arbitration on an individual basis, unless you opt out as provided below. Any dispute between you and LG shall not be combined or consolidated with a dispute involving any other person’s or entity’s product or claim. More specifically, without limitation of the foregoing, any dispute between you and LG shall not under any circumstances proceed as part of a class or representative action. Instead of arbitration, either party may bring an individual action in small claims court, but that small claims court action may not be brought on a class or representative basis.

**Arbitration Rules and Procedures.** To begin arbitration of a claim, either you or LG must make a written demand for arbitration. The arbitration will be administered by the American Arbitration Association (“AAA”) and will be conducted before a single arbitrator under the AAA’s Consumer Arbitration Rules that are in effect at the time the arbitration is initiated (referred to as the “AAA Rules”) and under the procedures set forth in this section. The AAA Rules are available online at www.adr.org/consumer. Send a copy of your written demand for arbitration, as well as a copy of this provision, to the AAA in the manner described in the AAA Rules. You must also send a copy of your written demand to LG at LG Electronics, USA, Inc. Attn: Legal Department- Arbitration 111 Sylvan Avenue, Englewood Cliffs, NJ 07632. If there is a conflict between the AAA Rules and the rules set forth in this section, the rules set forth in this section will govern. This arbitration provision is governed by the Federal Arbitration Act. Judgment may be entered on the arbitrator’s award in any court of competent jurisdiction. All issues are for the arbitrator to decide, except that issues relating to the scope and enforceability of the arbitration provision and to the arbitrability of the dispute are for the court to decide. The arbitrator is bound by the terms of this provision.

**Governing Law.** The law of the state of your residence shall govern this Limited Warranty and any disputes between us except to the extent that such law is preempted by or inconsistent with applicable federal law.

**Fees/Costs.** You do not need to pay any fee to begin an arbitration. Upon receipt of your written demand for arbitration, LG will promptly pay all arbitration filing fees to the AAA unless you seek more than $25,000 in damages, in which case the payment of these fees will be governed by the AAA Rules. Except as otherwise provided for herein, LG will pay all AAA filing, administration and arbitrator fees for any arbitration initiated in accordance with the AAA Rules and this arbitration provision. If you prevail in the arbitration, LG will pay your attorneys’ fees and expenses as long as they are reasonable, by considering factors including, but not limited to, the purchase amount and claim amount. Notwithstanding the foregoing, if applicable law allows for an award of reasonable attorneys’ fees and expenses, an arbitrator can award them to the same extent that a court would. If the arbitrator finds either the substance of your claim or the relief sought in the demand is frivolous or brought for an improper purpose (as measured by the standards set forth in Federal Rule of Civil Procedure 11(b)), then the payment of all arbitration fees will be governed by the AAA Rules. In such a situation, you agree to reimburse LG for all monies previously disbursed by it that are otherwise your obligation to pay under the AAA Rules. Except as otherwise

provided for, LG waives any rights it may have to seek attorneys' fees and expenses from you if LG prevails in the arbitration.

**Hearings and Location.** If your claim is for $25,000 or less, you may choose to have the arbitration conducted solely on the basis of (1) documents submitted to the arbitrator, (2) through a telephonic hearing, or (3) by an in-person hearing as established by the AAA Rules. If your claim exceeds $25,000, the right to a hearing will be determined by the AAA Rules. Any in-person arbitration hearings will be held at a location within the federal judicial district in which you reside unless we both agree to another location or we agree to a telephonic arbitration.

**Opt Out.** You may opt out of this dispute resolution procedure. If you opt out, neither you nor LG can require the other to participate in an arbitration proceeding. To opt out, you must send notice to LG no later than 30 calendar days from the date of the first consumer purchaser's purchase of the product by either: (i) sending an e-mail to optout@lge.com, with the subject line: "Arbitration Opt Out" or (ii) calling 1-800-980-2973. You must include in the opt out e-mail or provide by telephone: (a) your name and address; (b) the date on which the product was purchased; (c) the product model name or model number; and (d) the serial number (the serial number can be found (i) on the product; or (ii) online by accessing https://www.lg.com/us/support and clicking on "How do I find my model number?").

You may only opt out of the dispute resolution procedure in the manner described above (that is, by e-mail or telephone); no other form of notice will be effective to opt out of this dispute resolution procedure. Opting out of this dispute resolution procedure will not affect the coverage of the Limited Warranty in any way, and you will continue to enjoy the full benefits of the Limited Warranty. If you keep this product and do not opt out, then you accept all terms and conditions of the arbitration provision described above.

## Memo

## Memo

## Memo

| LG Customer Information Center | Centro de Información al Cliente LG | Centre de Service à la Clientèle de LG |
| --- | --- | --- |
| For inquiries or comments, visit **www.lg.com** or call: | Para consultas o comentarios, visite **www.lg.com** o llame por teléfono: | Pour des questions ou des commentaires, visitez **www.lg.com/ca_fr** ou appelez : |
| 1-800-243-0000 U.S.A. | 1-800-243-0000 EE.UU. | 1-800-243-0000 ÉTATS-UNIS |
| 1-888-542-2623 CANADA | 1-888-542-2623 CANADÁ | 1-888-542-2623 CANADA |
| Register your product Online! | ¡Registre su producto en línea! | Enregistrez votre produit en ligne! |
| www.lg.com | www.lg.com | www.lg.com/ca_fr |

INSTALLATION MANUAL

# WASHTOWER

Read this installation manual thoroughly before installing the appliance and keep it handy for reference at all times.

**ENGLISH**

WKHC252H*A

MFL71983219
Rev.01_120823

www.lg.com

Copyright © 2023 LG Electronics Inc. All Rights Reserved.

# TABLE OF CONTENTS


## 3 IMPORTANT SAFETY INSTRUCTIONS

3 READ ALL INSTRUCTIONS BEFORE USE
3 WARNING STATEMENTS
6 CAUTION STATEMENTS

## 8 PRODUCT OVERVIEW

8 Product Features

## 11 INSTALLATION

11 Before Installing
13 Choosing the Proper Location
14 Unpacking and Removing Shipping Material
15 Connecting Electric Dryers
19 Connecting the Water Inlet Hoses
20 Connecting the Drain Hose
23 Leveling the Appliance
24 Final Installation Check

## 26 APPENDIX

26 Disassembly

# IMPORTANT SAFETY INSTRUCTIONS

## READ ALL INSTRUCTIONS BEFORE USE

### Safety Messages

**Your safety and the safety of others are very important.**

We have provided many important safety messages in this manual and on your appliance. Always read and follow all safety messages.

This is the safety alert symbol.

This symbol alerts you to potential hazards that can kill or injure you and others. All safety messages will follow the safety alert symbol and either the word WARNING or CAUTION.

These words mean:

**WARNING**

You may be killed or seriously injured if you do not follow instructions.

**CAUTION**

You may be injured or cause damage to the product if you do not follow instructions.

All safety messages will tell you what the potential hazard is, tell you how to reduce the chance of injury, and tell you what may happen if the instructions are not followed.

## WARNING STATEMENTS

**WARNING**

- To reduce the risk of explosion, fire, death, electric shock, scalding or injury to persons when using this product, follow basic precautions, including the following:

### Installation

- Adhere to all industry recommended safety procedures including the use of long-sleeved gloves and safety glasses.
- Never attempt to operate this appliance if it is damaged, malfunctioning, partially disassembled, or has missing or broken parts, including a damaged cord or plug.
- Before use, the appliance must be properly installed as described in this manual.
- To reduce the risk of severe injury or death, follow all installation instructions.
- Refer to the INSTALLATION INSTRUCTIONS for detailed grounding procedures. Installation instructions are packed with the appliance for the installer’s reference. If the appliance is moved to a new location, have it checked and reinstalled by qualified service personnel.
- When moving or installing the product in a different location, call two or more qualified service personnel for installation and service.
- Do not install the appliance in humid spaces.
- Store and install the appliance where it will not be exposed to temperatures below freezing or exposed to outdoor weather conditions.
- This appliance is not designed for maritime use or for mobile installations such as in RVs, trailers, or aircraft.
- Keep packing materials out of the reach of children. Packaging material can be dangerous for children. There is a risk of suffocation.

- Destroy the carton, plastic bag, and other packing materials after the appliance is unpacked. Children might use them for play. Cartons covered with rugs, bedspreads, or plastic sheets can become airtight chambers.
- The appliance must be installed and electrically grounded by qualified service personnel in accordance with local codes.
- When installing or moving the appliance, be careful not to pinch, crush, or damage the power cord.
- Connect to a properly rated, protected, and sized power circuit to avoid electrical overload.
- This appliance must be positioned near to an electrical power supply.
- Disconnect the power cord, house fuse or circuit breaker before installing or servicing the appliance.
- The power cord of this appliance is equipped with a 3-prong (grounding) plug which mates with a standard 3-prong (grounding) wall outlet to minimize the possibility of electric shock from this appliance.
- Do not, under any circumstances, cut or remove the third (ground) prong from the power cord.
- Use new hoses when connecting the appliance to the water supply. Do not reuse old hoses.
- Local ordinances may prohibit installation in a garage. Contact a local building inspector.
- Do not install near another heat source such as a stove, oven or heater.
- The appliance must not be supplied through an external switching device, such as a timer, or connected to a circuit that is regularly switched on and off by a utility.
- This is a single appliance and a single unit for sale, delivery and installation.
- Do not disassemble this appliance for use, as it can’t be installed in a side-by-side configuration.

## Grounding Instructions

- Improper connection of the equipment-grounding conductor can result in a risk of electric shock. Check with a qualified electrician or service personnel if you are in doubt whether the appliance is properly grounded. Do not modify the plug provided with the appliance; if it will not fit the outlet, have a proper outlet installed by a qualified electrician.
- The appliance must be grounded. In the event of a malfunction or breakdown, grounding will reduce the risk of electric shock by providing a path of least resistance for electric current. The appliance is equipped with a cord having an equipment-grounding conductor and a grounding plug. The plug must be plugged into an appropriate outlet that is installed and grounded in accordance with all local codes and ordinances.
- The appliance must be plugged into a properly grounded outlet. Electrical shock may result if the appliance is not properly grounded. Have the wall outlet and circuit checked by a qualified electrician to make sure the outlet is properly grounded. Failure to follow these instructions may create an electric shock hazard and/or a fire hazard.

## Operation

- Read all instructions before using the appliance and save these instructions.
- Use this appliance only for its intended purpose.
- If the product has been submerged in water, sitting in standing water, or waterlogged, do not come in contact with the product and immediately contact an LG Electronics Customer Information Center for instructions before resuming use.
- If you detect a strange sound, a chemical or burning smell, or smoke coming from the appliance, unplug it immediately, and contact an LG Electronics Customer Information Center.
- Do not reach into the appliance if the tub or drum, agitator, or any interior parts are moving. Before loading, unloading, or adding items, press **Start/Pause** and allow the tub or drum to coast to a complete stop before reaching inside.
- This appliance is not intended for use by persons (including children) with reduced physical, sensory or mental capabilities, or lack of experience and knowledge, unless they have been given supervision or instruction concerning the use of the appliance by a person responsible for their safety.

- Do not allow children or pets to play on, in or with the appliance. Close supervision is necessary when the appliance is used near children or pets.
- Keep laundry products out of children’s reach. To prevent injury to persons, observe all warnings on product labels.
- Repair or immediately replace all power cords that have become frayed or otherwise damaged. Do not use a cord that shows cracks or abrasion damage along its length or at either end.
- Never unplug the appliance by pulling on the power cord. Always grip the plug firmly and pull straight out from the outlet.
- Do not use an extension cord or adapter with this appliance.
- Do not grasp the power cord or touch the appliance controls with wet hands.
- Do not modify or extend the power cord.
- If the electrical supply cord is damaged, it must only be replaced by the manufacturer or its service agent or a similar qualified person in order to avoid a hazard.
- Do not put oily or greasy clothing, candles or flammable materials on top of the appliance.
- Keep the area underneath and around your appliances free of combustible materials (lint, paper, rags, etc.), gasoline, chemicals and other flammable vapors and liquids.
- Do not store or use gasoline or other flammable vapors and liquids in the vicinity of this or any other appliance.
- Do not mix chlorine bleach with ammonia or acids such as vinegar. Follow package directions when using laundry products. Incorrect usage can produce poisonous gas, resulting in serious injury or death.
- Never use harsh chemicals, abrasive cleaners, or solvents to clean the appliance. They will damage the finish.
- Do not wash or dry articles that have been previously cleaned in, washed in, soaked in, or spotted with gasoline, dry-cleaning solvents, vegetable or cooking oil, or other flammable or explosive substances, as they give off vapors that could ignite or explode.
- Do not dry unwashed items in the appliance.
- Remove flammable objects such as lighters and matches from pockets.
- Do not add gasoline, dry cleaning solvents, or other flammable or explosive substances to the wash water. These substances give off vapors that could ignite or explode.
- Under certain conditions, hydrogen gas may be produced in a hot-water system that has not been used for 2 weeks or more. HYDROGEN GAS IS EXPLOSIVE. If the hot-water system has not been used for such a period, before using a washing machine, turn on all hot-water faucets and let the water flow from each for several minutes. This will release any accumulated hydrogen gas. As the gas is flammable, do not smoke or use an open flame during this time.
- Do not tamper with controls.
- Fix the drain hose securely in place to avoid flooding.
- Do not abuse, sit on, or stand on the door of the appliance.
- Always check the inside of the appliance for foreign objects.
- Do not allow water, bleach or other liquids to sit in the drum for extended periods. Doing so can corrode the drum or cause mildew or odors.
- Do not use the appliance to dry articles containing foam rubber or similarly textured rubber-like materials.
- Do not place items exposed to cooking oils in your appliance. Items contaminated with cooking oils may contribute to a chemical reaction that could cause a load to catch fire. To reduce the risk of fire due to contaminated loads, the final part of a tumble dryer cycle occurs without heat (cool down period). Avoid stopping tumble drying before the end of the drying cycle unless all items are quickly removed and spread out so that the heat is dissipated.
- Do not put any part of your body, such as your hands or feet, or metal objects under the appliance.
- Do not place objects on top of the appliance. Do not use the top of the appliance for storage.
- Do not let your hand get pinched when opening or closing the appliance door.

- Do not use replacement parts that have not been recommended by the manufacturer (e.g.parts made at home using a 3D printer).

## Maintenance

- Do not repair or replace any part of the appliance. All repairs and servicing must be performed by qualified service personnel unless specifically recommended in this owner's manual. Use only authorized factory parts.
- Disconnect this appliance from the power supply before cleaning and attempting any user maintenance. Turning the controls to the OFF position does not disconnect this appliance from the power supply.
- Remove any dust or foreign matter from the power plug pins.
- Do not disassemble or repair the appliance by yourself.
- Remove the door(s) before the appliance is removed from service or discarded to avoid the danger of children or small animals getting trapped inside.
- Make sure the dispenser drawer or lid is closed at all times when not being filled with laundry products.
- Clean the lint filter of the dryer before or after each load. On models with two-piece lint filters, clean the inner lint filter before or after each load and the outer lint filter every 10 loads or as needed.
- Unplug the appliance before cleaning to avoid the risk of electric shock.
- The interior of the appliance and exhaust duct should be cleaned periodically by qualified service personnel.
- Certain internal parts are intentionally not grounded and may present a risk of electric shock only during servicing. Service personnel – Do not contact the following parts while the appliance is energized: Motor, Control Board, Noise Filter.
- To avoid physical injury and burns, use care when cleaning the condenser and do not touch or clean the condenser with bare hands.

# CAUTION STATEMENTS

## ⚠ CAUTION

- To reduce the risk of minor or moderate injury to persons, malfunction, or damage to the product or property when using this product, follow basic precautions, including the following:

## Installation

- Install the product on a firm and level floor.

## Operation

- Turn off the water faucets and unplug the appliance if the appliance is to be left for an extended period of time, such as during vacations.
- ALWAYS follow the fabric care instructions supplied by the garment manufacturer.
- Use fabric softeners or products to eliminate static only as recommended by the manufacturer.
- Do not combine laundry products for use in one load unless specified on the label.
- Do not touch draining water, which may be hot.
- If the drain hose and the water inlet hose are frozen in winter, defrost them before using the appliance.
- Do not store or spill liquid detergents, cleaners, or bleaches (chlorine bleach, oxygen bleach) on the appliance. Doing so may result in corrosion, discoloration or damage to the surface of the appliance.
- Clothing or articles that are waterproof or water resistant must be washed in the Waterproof cycle only. (Examples include water resistant clothing, mattress covers, outdoor clothes, plastic mats.) Using

another cycle may result in personal injury or damage to the washer, clothes, walls, floor, and surrounding objects due to abnormal vibration.

- Clean the lint filter before or after each load.



# SAVE THESE INSTRUCTIONS

# PRODUCT OVERVIEW

## Product Features

The images in this guide may be different from the actual components and accessories, which are subject to change by the manufacturer without prior notice for product improvement purposes.

### Front View

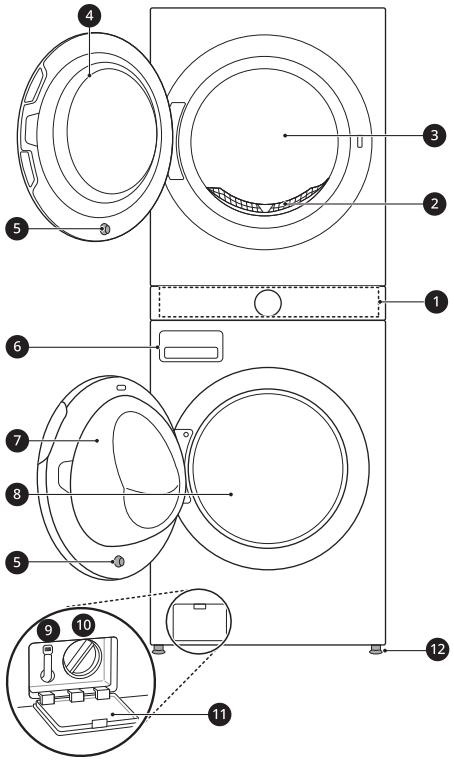


❶ Control Panel

❷ 3-Piece Lint Filter

❸ Dryer Drum

❹ Dryer Door

❺ Magnetic Door Stop

❻ Detergent Dispenser Drawer

❼ Washer Door

❽ Washer Drum

❾ Drain Hose

❿ Drain Pump Filter

⓫ Drain Pump Filter Cover

⓬ Leveling Feet

### Rear View

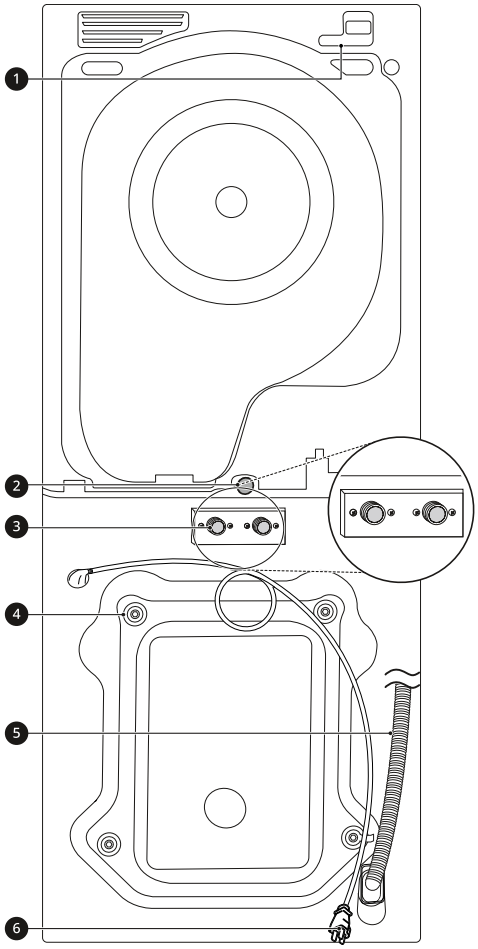


❶ Terminal Block Access Panel

❷ Dryer Drain Outlet (behind stacking bracket)

❸ Hot and Cold Water Inlets

❹ Shipping Bolts

❺ Drain Hose (for Washer)

❻ Power Cord (for Washer)

## Product Specifications

| Model | WKHC252H*A |
|---|---|
| **Electrical Requirements** | Please refer to the rating label for detailed information. |
| **Min. / Max. Water Pressure** | 20 - 120 psi (138 - 827 kPa) |
| **Dimensions (Width X Height X Depth)** | 27'' X 74 3/8'' X 32 3/4'' (70 cm X 189 cm X 83 cm) |
| **Maximum Depth with Door Open** | 57 1/2'' (146 cm) |
| **Net Weight** | 353 lb (160 kg) |
| **Capacity (Washer/Dryer)** | 5.0 cu.ft. / 7.8 cu.ft. |
| **Max. Spin Speed (Washer)** | 1300 RPM |
| **Operating Temperature Range** | 41-95 °F (5-35 °C) |

## Accessories

### Included Accessories

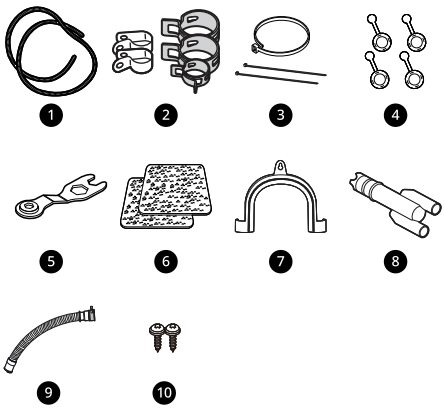


❶ Water Drain Hose (for Dryer)

❷ Band Clamps (5 EA)

❸ Cable Ties (3 EA)

❹ Hole Caps

❺ Wrench

❻ Non-skid Pads

❼ Elbow Bracket (for securing drain hose)

❽ Drain Hose Connector

❾ Short Drain Hose

❿ Screws (2 EA)

## Required Accessory

❶ Hot and Cold Water Hoses (for Washer)

## Optional Accessory (sold separately)

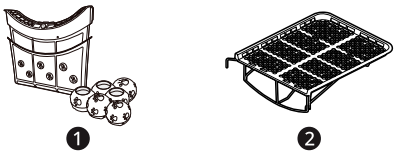


❶ Pet care accessories kit

❷ Drying Rack

## Required Accessories for the Electric Dryer (sold separately)

❶ 4-wire power cord kit

❷ 3-wire power cord kit

**⚠ WARNING**

- For your safety and for extended product life, use only authorized components. The manufacturer is not responsible for product malfunction, property damage or bodily injury caused by the use of separately purchased unauthorized components, parts, or non-LG products.

# INSTALLATION

## Before Installing

### Installation Overview

Please read the following installation instructions first after purchasing this appliance or transporting it to another location.

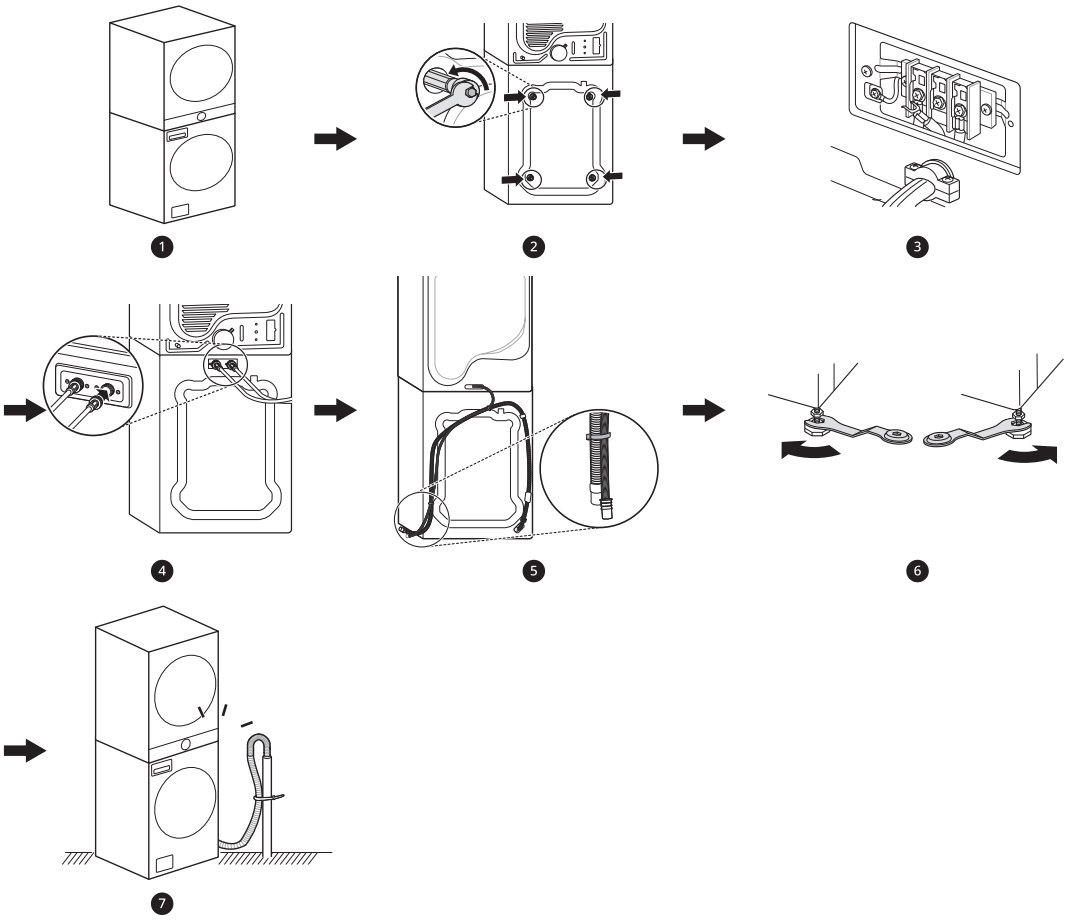


❶ Choosing the Proper Location

❷ Unpacking and Removing Shipping Material

❸ Connecting the Electric Dryer

❹ Connecting the Inlet Hoses

❺ Connecting the Drain Hoses

❻ Leveling the Appliance

❼ Final Installation Check

**⚠ WARNING**

- Read all installation instructions completely before installing and operating the appliance. It is important that you review this entire manual before installing and using the appliance. Detailed instructions concerning electrical connections and additional requirements are provided on the following pages.
- Moving or installation of the appliance requires two or more people. Failure to follow these instructions may result in injury.
- Store and install the appliance where it will not be exposed to temperatures below freezing or exposed to outdoor weather conditions. Failure to follow this warning can cause product or part failure, serious injury, fire, electric shock, or death.
- Properly ground the appliance to conform with all governing codes and ordinances. Failure to follow this warning can cause serious injury, fire, electric shock, or death.

**WARNING**

- To ensure proper airflow, do not block the large opening on the bottom of the appliance with carpeting or other materials.
- Do not remove the ground prong from the power cord. Do not use an adapter or extension cord. Plug into a grounded 3-prong outlet. Failure to follow this warning can cause serious injury, fire, electric shock, or death.
- Certain internal parts are intentionally not grounded and may present a risk of electric shock only during servicing. Service personnel- Do not contact the following parts while the appliance is energized: pump, valve, motor, control board, noise filter.

**NOTE**

- When moving the product, tilt it toward the back of the product. Do not transport the product in a horizontal position.

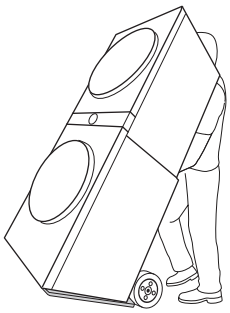

# Choosing the Proper Location

Check the following requirements for the install location before installing the appliance.

- Allow for sufficient space between the walls and the appliance for installation.
- Make sure that the floor is clean, dry and free of dust, dirt, water and oil so the leveling feet cannot slide easily. Leveling feet that can move or slide on the floor can contribute to excess vibration and noise.
- If the floor has too much flex, reinforce it to make it more rigid. If the floor is not solid, it may cause severe vibration and noise.
- If a drain pan must be used, take extra care to follow the instructions provided with the drain pan and make sure the leveling feet are adjusted for firm and even contact with the pan. Use of drain pans and failure to properly level the appliance may result in increased vibration and noise during operation.

## Flooring

- To minimize noise and vibration, install the washer on a level, solidly constructed floor capable of supporting the appliance without flexing or bouncing.
- The appliance must be installed on firm flooring to minimize vibration during the spin cycle. Concrete flooring is best, but a wood floor is sufficient, provided it is built to FHA standards.
- The floor under the appliance must not slope more than **1 inch (2.5 cm)** from front to back or side to side.
- Installing on carpeting and soft tile surfaces is not recommended.
- Never install the appliance on a platform or weakly supported structure.

### Floor Installation

To ensure sufficient clearance for water inlet hoses, drain hose and airflow, allow minimum clearances of at least **1'' (2.5 cm)** at the sides and **4'' (10 cm)** behind the appliance. Be sure to allow for wall, door, or floor moldings that may increase the required clearances.

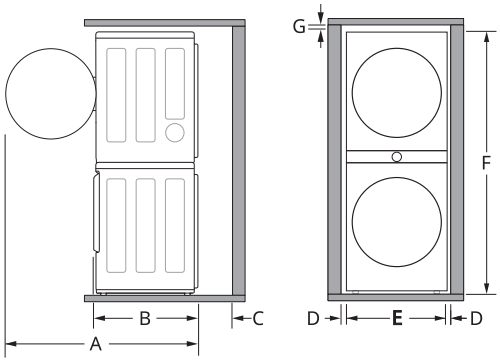


| Dimensions and Clearances | |
|---|---|
| A | 57 1/2'' (146 cm) |
| B | 32 3/4'' (83 cm) |
| C | 4'' (10 cm) |
| D | 1'' (2.5 cm) |
| E | 27'' (70 cm) |
| F | 74 3/8'' (189 cm) |
| G | 1'' (2.5 cm) |

## Power Outlet

- The power outlet must be within **60 inches (1.5 m)** of either side of the appliance.
- Position the appliance so that the outlet and plug are easily accessible.
- Do not overload the outlet with more than one appliance.
- The outlet must be grounded in accordance with current electrical wiring codes and regulations.
- Use a time-delay fuse or circuit breaker.
- It is the personal responsibility and obligation of the appliance owner to have a proper outlet installed by a qualified electrician.

**NOTE**

- Check code requirements that limit, or do not permit, installation of the appliance in garages, mobile homes or sleeping quarters. Contact your local building inspector.

## Clearances

The following clearances are recommended for the appliance.

- Additional clearances should be considered for ease of installation and servicing.
- Additional clearances should be considered on all sides of the appliance to reduce noise transfer.

### Installation spacing for Recessed Area or Closet Installation

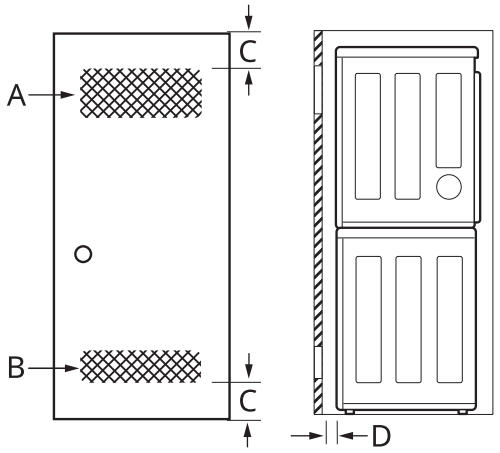


| Description | Dimension/Clearance |
|---|---|
| A: Upper Ventilation Opening | ≥ 48 sq. in. (310 $cm^2$) |
| B: Lower Ventilation Opening | ≥ 24 sq. in. (155 $cm^2$) |
| C: Distance to Ventilation Opening | ≥ 3″ (7.6 cm) |
| D: Front Clearance | ≥ 4″ (10 cm) |

### Closet Ventilation Requirements

Closets with doors must have both an upper and lower vent to prevent heat and moisture buildup in the closet. One upper vent opening with a minimum opening of 48 sq. in. (310 $cm^2$) must be installed no lower than 6 feet above the floor. One lower vent opening with a minimum opening of 24 sq. in. (155 $cm^2$) must be installed no more than one foot above the floor. Install vent grills in the door or cut down the door at the top and bottom to form openings. Louvered doors with equivalent ventilation openings are also acceptable.

**NOTE**

- There should be at least a little space around the appliance (or any other appliance) to eliminate the transfer of vibration from one appliance to another. If there is enough vibration, it could cause appliances to make noise or come into contact, causing paint damage and further increasing noise.
- No other fuel-burning appliance can be installed in the same closet as an appliance.

# Unpacking and Removing Shipping Material

## Unpacking Shipping Material

* This feature is only available on some models.

### Lifting the Appliance off the Foam Base

- After removing the carton and shipping material, lift the appliance off the foam base.
- Make sure the plastic drum support ❶* comes off with the base and is not stuck to the bottom of the appliance.
- If you must lay the appliance down to remove the carton base ❷, always protect the side of the appliance and lay it carefully on its side. Do not lay the appliance on its front or back.

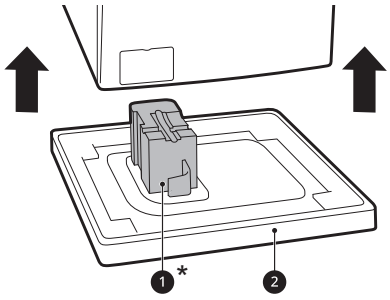


**⚠ CAUTION**

- Remove all shipping materials from the appliance for proper operation and inspect it for shipping damage. Failure to remove shipping materials can cause excessive noise and vibration.

### Removing Shipping Material

**1** Remove the bolt assemblies.

- Starting with the bottom two shipping bolts, use the included wrench ❸ to fully loosen all 4 shipping bolts by turning them counterclockwise.

- Remove the bolt assemblies (bolts and retainers) by wiggling them slightly while pulling them out.
- The power cord is secured to the back of the washer with a shipping bolt to help prevent operation with shipping bolts in place.

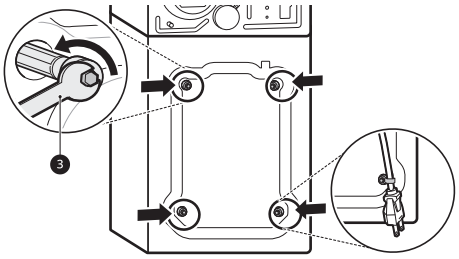


**2** Install the hole caps.

- Locate the hole caps ❹ included in the accessory pack or attached to the back of the washer. Install the caps in the holes left by the bolt assemblies.

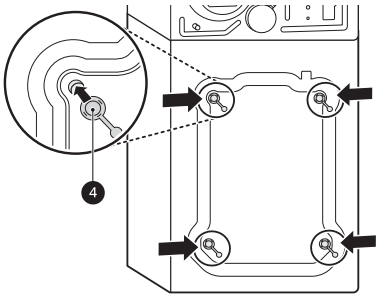


**⚠ CAUTION**

- Once removed, save the bolt assemblies for future use. To prevent damage to internal components, do not transport the appliance without reinstalling the shipping bolts. Failure to remove shipping bolts and retainers may cause severe vibration and noise, which can lead to permanent damage to the appliance.

# Connecting Electric Dryers

**⚠ WARNING**

- To reduce the risk of fire or explosion, electric shock, property damage, injury to persons, or death when using this appliance, fulfill the following requirements.

## Electrical Requirements for Electric Models Only

**⚠ WARNING**

- The power cord (pigtail) connection between the wall receptacle and the dryer terminal block IS NOT supplied with the dryer. Type of pigtail and gauge of wire must conform to local codes and with instructions on the following pages.
- The wiring and grounding must conform to the latest edition of the National Electrical Code, ANSI/NFPA 70 and all applicable local regulations. Please contact a qualified electrician to check your home's wiring and fuses to ensure that your home has adequate electrical power to operate the dryer.
- This dryer must be connected to a grounded metal, permanent wiring system, or an equipment-grounding conductor must be run with the circuit conductors and connected to the equipment-grounding terminal or lead on the dryer.
- The dryer has its own terminal block that must be connected to a separate 240 VAC, 60-Hertz, single-phase circuit, fused at 15 amperes. (The circuit must be fused on both sides of the line.) ELECTRICAL SERVICE FOR THE DRYER SHOULD BE OF THE MAXIMUM RATE VOLTAGE LISTED ON THE NAMEPLATE. DO NOT CONNECT THE DRYER TO 110-, 115-, OR 120-VOLT CIRCUIT.
- If the branch circuit to dryer is 15 ft. (4.5 m) or less in length, use UL (Underwriters Laboratories) listed No.-10 AWG wire (copper wire only), or as required by local codes. If over 15 ft. (4.5 m), use UL-listed No.-8 AWG wire (copper wire only), or as required by local codes. Allow sufficient slack in wiring so the dryer can be moved from its normal location when necessary.
- Do not modify the plug and internal wire provided with the dryer.
- The dryer should be connected to a 3-hole or 4-hole outlet.
- If the plug does not fit the outlet, a proper outlet will need to be installed by a qualified electrician.
- Connect the power cord to the terminal block. Each colored wire should be connected to the same color screw. Wire color indicated in the manual is connected to the same color screw in the block.
- Grounding through the neutral conductor is prohibited for (1) new branch-circuit installations, (2) mobile homes, (3) recreational vehicles, and (4) areas where local codes prohibit grounding through the neutral conductors.

**WARNING**

- This dryer is supplied with the neutral wire grounded. This white ground wire MUST BE MOVED to the neutral terminal when a 4-wire cord is to be used, or where grounding through the neutral conductor is prohibited.

## Four-Wire Power Cord

- A UL-listed strain relief is required.

- Use a 30-amp, 240-volt, 4-wire, UL-listed power cord with #10 AWG-minimum copper conductor and closed loop or forked terminals with upturned ends.

**1** Remove the terminal block access cover on the upper back of the appliance.

**2** Install UL-listed strain relief into the power cord through-hole.

**3** Thread a 30-amp, 240-volt, 4-wire, UL-listed power cord with #10 AWG-minimum copper conductor through the strain relief.

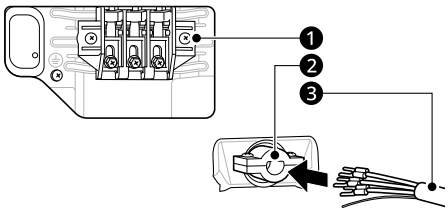


❶ Terminal Block

❷ UL-Listed Strain Relief

❸ UL-Listed 4-Wire Power Cord

**4** Transfer the appliance's ground wire from behind the green ground screw to the center screw of the terminal block.

**5** Attach the two hot leads (black and red) of the power cord to the outer terminal block screws.

**6** Attach the neutral (white) wire to the center screw of the terminal block.

**7** Attach the power cord ground wire to the green ground screw.

**8** Tighten all screws securely.

**9** Reinstall the terminal block access cover.

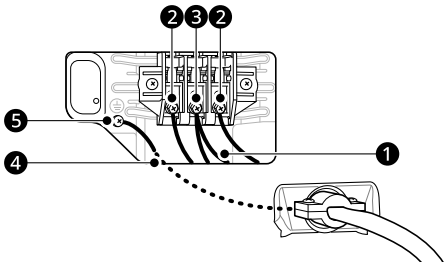


❶ White Wire moved from Ground Screw

❷ Hot Leads of Power Cord (Black and Red)

❸ Neutral Wire (White)

❹ Power Cord Ground Wire

❺ Ground Screw

## Four-Wire Direct Wire

- A UL-listed strain relief is required.

- Use UL-listed 4-wire #10 AWG minimum copper conductor cable. Allow at least 5 ft. (1.5 m) of wire to allow for removal and reinstallation of the dryer.

**1** Remove 5 inches (12.7 cm) of the outer covering from the wire and remove 5 inches of insulation from the ground wire. Cut off approximately 1.5 inches (3.8 cm) from the other three wires and strip 1 inch (2.5 cm)

insulation from each wire. Bend the ends of the three shorter wires into a hook shape.

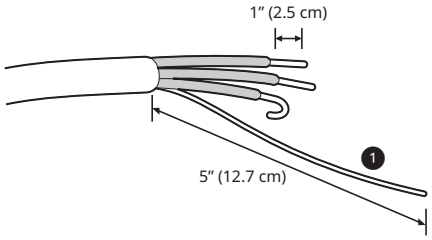


❶ Ground Wire

**2** Remove the terminal block access cover on the upper back of the appliance.

**3** Install UL-listed strain relief into the power cord through-hole.

**4** Thread the 4-wire #10 AWG minimum copper power cable prepared in step 1 through the strain relief.

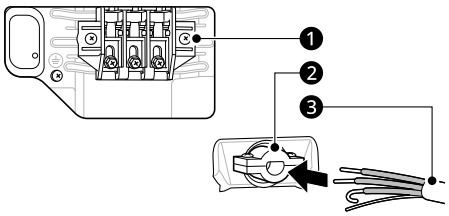


❶ Terminal Block

❷ UL-Listed Strain Relief

❸ UL-Listed 4-Wire Power Cord

**5** Transfer the appliance's ground wire from behind the green ground screw to the center of the terminal block.

**6** Attach the two hot leads (black and red) of the power cord to the outer terminal block screws.

**7** Attach the neutral (white) wire to the center screw of the terminal block.

**8** Attach the power cord ground wire to the green ground screw.

**9** Tighten all screws securely.

**10** Reinstall the terminal block access cover.

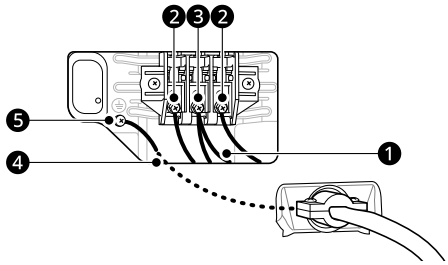


❶ White Wire moved from Ground Screw

❷ Hot Leads of Power Cord (Black and Red)

❸ Neutral Wire (White)

❹ Power Cord Ground Wire

❺ Ground Screw

## Three-Wire Power Cord

- A 3-wire connection is NOT permitted on new construction after January 1, 1996.

- A UL-listed strain relief is required.
- Use a 30-amp, 240-volt, 3-wire, UL-listed power cord with #10 AWG-minimum copper conductor and closed loop or forked terminals with upturned ends.

**1** Remove the terminal block access cover on the upper back of the appliance.

**2** Install the UL-listed strain relief into the power cord through-hole.

**3** Thread a 30-amp, 240 volt, 3-wire, UL-listed power cord with #10 AWG-minimum copper conductor through the strain relief.

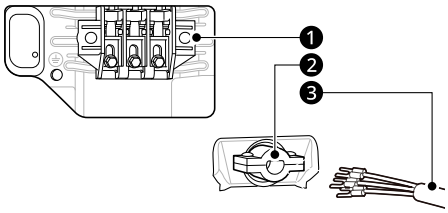


❶ Terminal Block

❷ UL-Listed Strain Relief

❸ UL-Listed 3-Wire Power Cord

**4** Attach the two hot leads (black and red) of the power cord to the outer terminal block screws.

**5** Attach the neutral (white) wire to the center terminal block screw.

**6** Connect the external ground (if required by local codes) to the green ground screw.

**7** Tighten all screws securely.

**8** Reinstall the terminal block access cover.

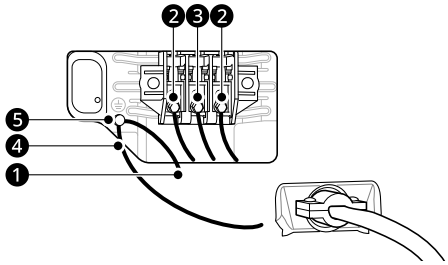


❶ White Wire from Dryer Harness

❷ Hot Leads of Power Cord (Black and Red)

❸ Neutral Wire (White)

❹ External Ground Wire (if required by local codes)

❺ Ground Screw

## Three-Wire Direct Wire

- A 3-wire connection is NOT permitted on new construction after January 1, 1996.

- A UL-listed strain relief is required.
- Use UL-listed 3-wire, #10 AWG minimum copper conductor cable. Allow at least 5 ft. (1.5 m) length to allow for removal and installation of dryer.

**1** Remove 3.5 inches (8.9 cm) of the outer covering from the wire. Strip 1 inch (2.5 cm) insulation from each wire. Bend the ends of the three wires into a hook shape.

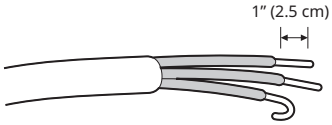


**2** Remove the terminal block access cover on the upper back of the appliance.

**3** Install UL-listed strain relief into the power cord through-hole.

**4** Thread the 3-wire, #10 AWG minimum copper conductor power cable prepared in step 1 through the strain relief.

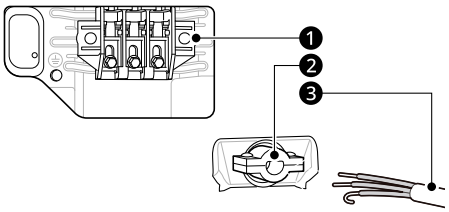


❶ Terminal block

❷ UL-listed strain relief

❸ UL-listed 3-wire power cord

**5** Attach the two hot leads (black and red) of the power cord to the outer terminal block screws.

**6** Attach the neutral (white) wire to the center terminal block screw.

**7** Connect the external ground (if required by local codes) to the green ground screw.

**8** Tighten all screws securely.

**9** Reinstall the terminal block access cover.

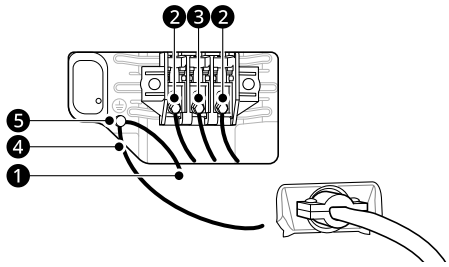


❶ Hot lead (black and red)

❷ Neutral wire (white)

❸ External ground wire (if required by local codes)

❹ Wire from the appliance harness

❺ Ground screw (green)

# Connecting the Water Inlet Hoses

## How to Connect the Water Inlet Hoses

To avoid the risk of costly water damage, purchase and install new water inlet hoses when installing the appliance.

**⚠ WARNING**

- Do not overtighten the hoses or cross-thread the hose fittings. Overtightening or cross-threading can damage the valves or couplings, resulting in leaking and property damage.
- Do not reuse old hoses. Use only new hoses when installing the appliance. Old hoses could leak or burst causing flooding and property damage. Contact an LG Customer Information Center for assistance in buying hoses.

**NOTE**

- Periodically check the hoses for cracks, leaks, and wear, and replace the hoses every five years.
- Do not stretch the water hoses intentionally, and make sure that they are not pinched, crushed or kinked by other objects.
- Water supply pressure must be between 20 psi and 120 psi (138 - 827 kPa). If the water supply pressure is more than 120 psi, a pressure reducing valve must be installed.
- Your hot water heater should be set to deliver water at 120–135 ℉ (48–57 ℃) to allow the appliance to properly control wash temperatures.
- Do not store or install the appliance in a location subject to freezing temperatures. Damage to the water inlet hoses and internal mechanisms of the appliance can result. If the appliance was exposed to freezing temperatures prior to installation, allow it to stand at room temperature for several hours before use and check for leaks prior to operation.
- Do not use flood-preventing hoses with auto shut off devices. The devices can be tripped during fill and prevent the appliance from filling properly.

**1** Check the fittings and seals. Inspect the threaded fitting on each hose and make sure there is a rubber seal ❶ in place in both ends of each hose to prevent leaking.

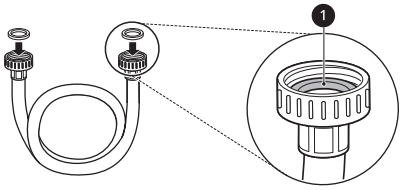


**2** Connect the water supply hoses.

- Connect the water inlet hoses to the hot and cold water faucets tightly by hand and then tighten another 2/3 turn with pliers.
- Connect the blue hose to the cold water faucet and the red hose to the hot water faucet.

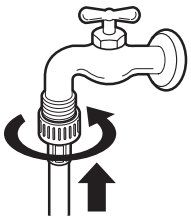

**3** Flush out the inlet hoses.

- After the hoses are connected, turn on the water faucets and flush out any foreign substances such as dirt, sand, or sawdust.
- Let the water drain into a bucket, and check the water temperature to make sure you've connected the hoses to the correct faucets.

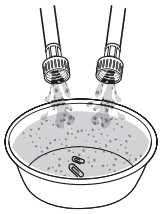

**4** Attach the inlet hoses to the back of the washer.

- Attach the hot water inlet hose to the hot water inlet on the back of the washer. Attach the cold water inlet hose to the cold water inlet on the back of the washer.
- Tighten the fittings securely. Turn on both faucets all the way and check for leaks at both ends of the hoses.

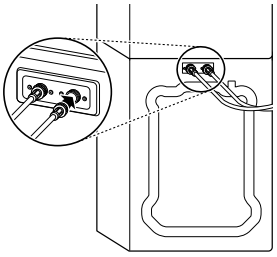

# Connecting the Drain Hose

Connect the drain hose to either a standpipe or laundry tub.

**⚠ WARNING**

- The drain hose should always be properly secured. Failure to properly secure the drain hose can result in flooding and property damage.

**NOTE**

- The drain must be installed in accordance with any applicable local codes and regulations.
- Make sure that the drain hose is not stretched, pinched, crushed, or kinked.
- The end of the drain hose should be located a minimum of **24" (61 cm)** and a maximum of **96" (244 cm)** above the bottom of the washer. For best results, locate the end of the drain hose no higher than **66" (168 cm)** above the bottom of the washer. As the drain outlet is raised beyond **66" (168 cm)**, the drain function will be increasingly affected.
- If you are experiencing backflow or residual water in the dryer reservoir, try reducing the height of the dryer drain hose end to lower than 38" above the base of the washer.
- Never create an airtight seal between the hose and the drain with tape or other means. If no air gap is present, water can be siphoned out of the drum resulting in poor wash/rinse performance or clothing damage.

## Connecting the Drain Hose to the Dryer

**1** Insert the hose clamp ❶ onto the drain hose of the dryer.

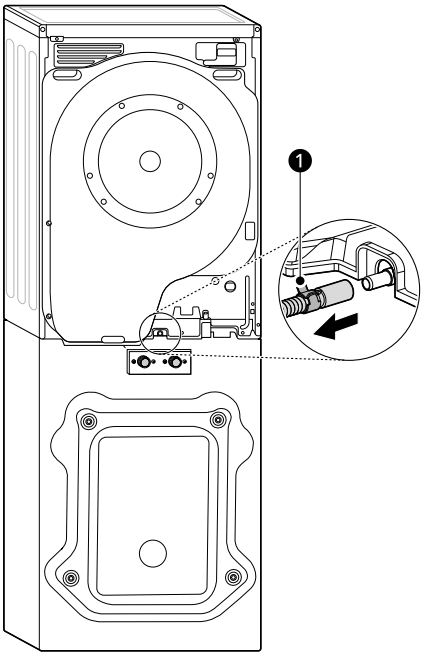


**2** Connect the drain hose of the dryer and secure the hose clamp.

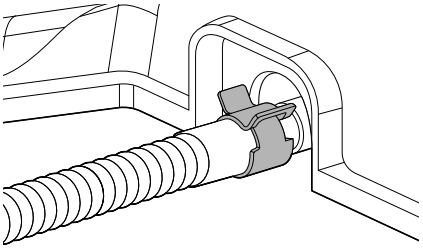

**3** Screw in the band to secure the drain hose of the dryer onto the stacking bracket.

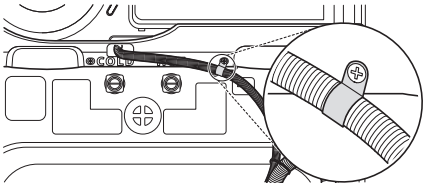

**4** Use the provided tie strap ❷ to secure the 2 drain hoses in place.

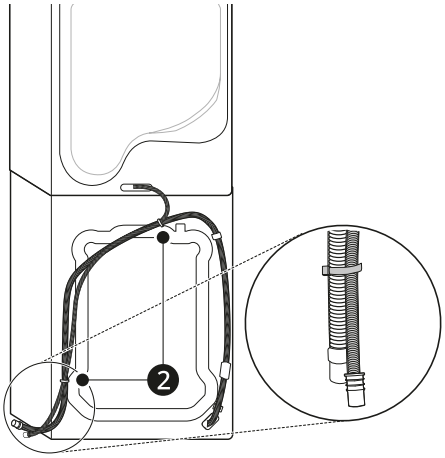


**NOTE**

- If the drain hose is too long, do not force it back into the appliance. This will cause abnormal noise.

## Connecting Hoses to the Drain Hose Connector

**1** Slide the included band clamp onto the end of the drain hose of the washer.

**2** Connect the drain hoses from the washer and dryer to the drain hose connector. Tighten the band clamp ❶ to keep the washer hose in place.

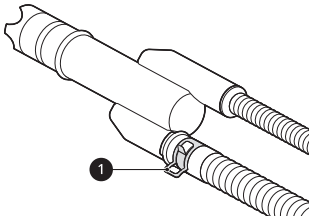


**3** Use the band clamp ❷ on the short drain hose (included) to attach it to the bottom opening of the drain hose connector.

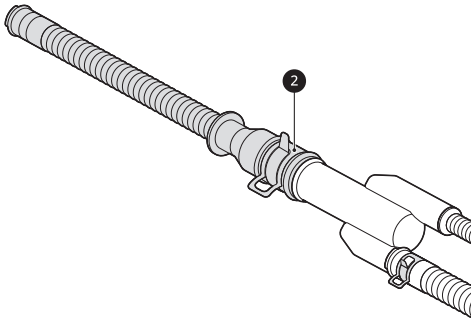


**4** Securely connect the short drain hose to a floor drain or standpipe.
When connecting to a waste spigot, use a band clamp ❸ on the end of the short drain hose.

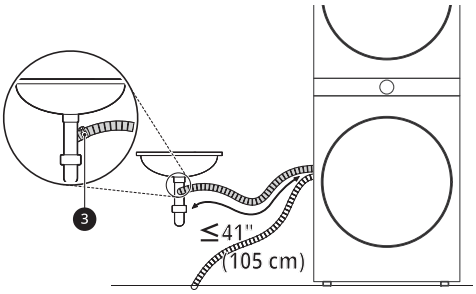


**⚠ CAUTION**

- Adjust the wire hose clamp to prevent the hose from coming loose or leaking. Failure to do so could result in flooding. Use of the drain hose connector helps avoid siphoning, odors, or improper draining.
- Make sure the drain hoses are not kinked or pinched. This is a potential cause of drainage problems or noise.

## Using a Standpipe to Drain

**NOTE**

- The end of the drain hose should be located a minimum of **24" (61 cm)** and a maximum of **96" (244 cm)** above the bottom of the washer. For best results, locate the end of the drain hose no higher than **66" (168 cm)** above the bottom of the washer. As the drain outlet is raised beyond **66" (168 cm)**, the drain function will be increasingly affected.
- If you are experiencing backflow or residual water in the dryer reservoir, reduce the height of the dryer drain hose end to 38" or less above the base of the washer.
- Never create an airtight seal between the hose and the drain with tape or other means. If no air gap is present, water can be siphoned out of the drum resulting in poor wash/rinse performance or clothing damage.

**1** Clip the end of the hose for the washer into the elbow bracket.

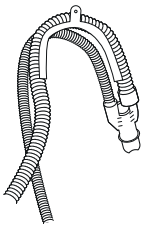

**2** Insert the end of the drain hose into the standpipe.

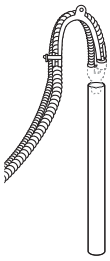

**3** Use the provided tie strap ❷ to secure the drain hose in place.

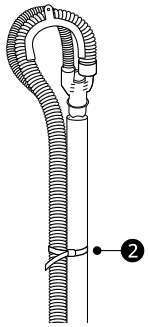


**4** If the water valves and drain are built into the wall, fasten the drain hose to one of the water hoses with the provided tie strap ❸ (ribbed side on inside).

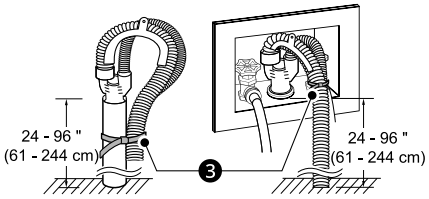


## Using the Laundry Tub to Drain

**1** Clip the end of the hose for washer into the elbow bracket.

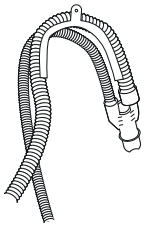

**2** Hang the end of the drain hose over the side of the laundry tub.

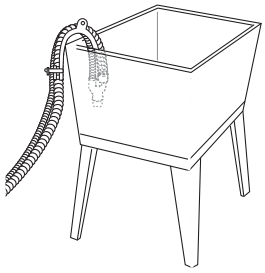

**3** Use the provided tie strap to secure the drain hose in place.

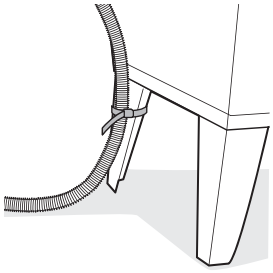

# Leveling the Appliance

The drum of the washer spins at very high speeds. To minimize vibration, noise, and unwanted movement, the floor must be a solid, level surface.

**CAUTION**

- Using the appliance without leveling it may cause excess vibration and noise, leading to an appliance malfunction.
- Adjust the leveling feet only as far as necessary to level the appliance. Extending the leveling feet more than necessary can cause the appliance to vibrate.

**NOTE**

- Before installing the appliance, make sure that the floor is clean, dry and free of dust, dirt, water and oil so the appliance feet cannot slide easily. Feet that move or slide on the floor can contribute to excessive vibration and noise.

## How to Level the Appliance

**1** Position the appliance in its final location.

- Take special care not to pinch, strain, or crush the water and drain hoses. If you have a carpenter's level ❶, you can use it to check that the appliance is level. The slope beneath the appliance should not exceed **1 inch**, and all 4 leveling feet must rest firmly on the floor.

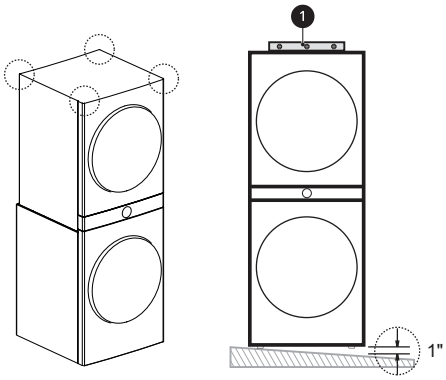


**2** Adjust the leveling feet.

- Turn all 4 leveling feet in one direction to raise the appliance or the other direction to lower it.

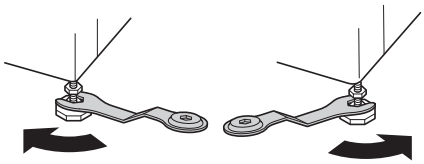

**3** Check the level again.

- Push or rock the top edges of the appliance gently to make sure the appliance does not rock. If the appliance rocks, readjust the leveling feet.

**4** Tighten the locknuts ❷.

- Turn the locknuts counterclockwise and tighten them when the appliance is level.

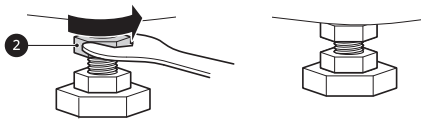


**WARNING**

- Do not raise the front of the appliance with a wood block or similar object. Doing so can cause serious injury or death.

## Using Non-Skid Pads

If you install the appliance on a slippery surface, it may move because of excessive vibration. Incorrect leveling may cause malfunction through noise and vibration. If this occurs, install the non-skid pads under the leveling feet and adjust the level.

**1** Clean the floor to attach the non-skid pads.

- Use a dry rag to remove and clean foreign objects or moisture. If moisture remains, the non-skid pads may slip.

**2** Adjust the level after placing the appliance in the installation area.

**3** Place the adhesive side ❸ of the non-skid pad on the floor.

- It is most effective to install the non-skid pads under the front leveling feet. If it is hard to place the pads under the front leveling feet, place them under the back leveling feet.

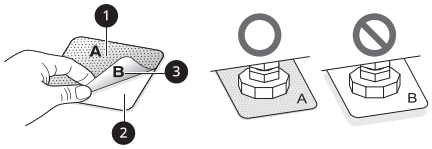


❶ This side up

❷ Remove backing

**4** Recheck the appliance's levelness.

- Push or rock the top edges of the appliance gently to make sure the appliance does not rock. If the appliance rocks, level the appliance again.

# Final Installation Check

## Connecting the Washer to the Power Supply

Plug the washer into a **120 VAC, 60 Hz** grounded 3-prong outlet.

**⚠ WARNING**

- Do not use a worn or damaged power cord or power plug. Replace or repair it immediately. Failure to do so may result in death, fire, electric shock, or malfunction.
- Do not modify the power cord and plug provided with the appliance. Do not damage it when installing or moving the appliance. Doing so may result in death, fire, electric shock, or malfunction.
- Make sure that the appliance is grounded.
- Connect this appliance to a grounded outlet conforming to the rating prior to use. Failure to do so may result in fire, electric shock, or malfunction.
- Do not damage or cut off the ground prong of the power cord. Doing so may cause death, fire, electric shock, or product malfunction.
- Improper connection of the equipment grounding conductor can result in risk of electric shock. Check with a qualified electrician or service technician if you are in doubt as to whether the appliance is properly grounded. If the plug does not fit the outlet, have a proper outlet installed by a qualified electrician.
- The appliance and outlet must be positioned so that the plug is easily accessible.
- Do not use an adapter or extension cord. Doing so may result in serious injury, fire, electric shock, or death.
- For best performance, plug the appliance into its own individual outlet. This helps prevent overloading house wiring circuits which could cause a fire hazard from overheated wires.
- If necessary, use a new, UL-listed 3-prong (grounding) plug rated at no less than the branch circuit. Do not use an extension cord longer than 3 feet. Failure to follow these warnings may result in serious injury, fire, electric shock, or death.

## Testing the Washer

Check if the washer is properly installed and run a test cycle.

**1** Load the washer with 6 thick bath towels (approximately 6 pounds).

**2** Press the **Power** button.

**3** Press the **Speed Wash** button.

**4** Select the **Start/Pause** button to start the wash cycle.

**5** Make sure that water is supplied, that the washer does not rock or vibrate excessively, and that it drains well during the spin cycle.

**NOTE**

- If water leaks during water supply, see **Connecting the Water Inlet Hoses** to connect them properly.
- If the appliance rocks and vibrates excessively, see **Leveling the Appliance** to level it again.
- If the drain does not work, see **Connecting the Drain Hose** to install the hose properly.

## Testing the Dryer

Once you have completed the installation of the appliance, use this test to make sure the appliance is operating properly. This test should be performed to alert you to any serious problems with the appliance.

### Testing Dryer Heating

#### Electric Models

Close the dryer door and press the **Power** button to turn the dryer on. Press the **Time Dry** and **Start/Pause** buttons to start the test. The air inside the drum should be warm after the dryer has been operating for 3 minutes.

### Activating the Installation Test

**1** Do not load anything in the drum for this test, as it may affect the accuracy of the results.

**2** Press the **Power** button and then press and hold the **Wrinkle Care** and **Less Time** buttons.

- This button sequence activates the installation test. The code InS will display if the activation is successful.
- Remove the filters, hold the flap open, and pour room temperature water inside the filter housing until you hear a buzzer (about 24 oz / 700 ml). Reinstall the filter.

**3** Press the **Start/Pause** button.

- The appliance will start the test, which will last a few minutes.

**4** Check the display for results.

- If operating normally, the product installation mode is completed without error code.

**5** End of cycle.

- At the end of the test cycle, End will display. The test cycle will end and the appliance will shut off automatically after a short delay.

### Error Codes

Check the error code before you call for service.

| Error Code | Possible Cause & Solution |
|---|---|
| PS | **Electric dryer power cord is not connected correctly, or house power supply is incorrect.**<br>• Reset circuit breaker or replace fuse. Do not increase the fuse capacity. |
| | **House fuse is blown, circuit breaker has tripped, or power outage has occurred.**<br>• If the problem is a circuit overload, have it corrected by a qualified electrician. |
| drn | **The drain hose is not connected properly.**<br>• Connect the drain hose properly.<br>• Check if the drain hose is free of clogs or kinks and is not pinched behind or under the dryer.<br>• If the message keeps appearing, unplug the power cord and call for service. |
| LE2 | **The compressor has stopped suddenly.**<br>• Unplug the power plug and call for service. |

# APPENDIX

## Disassembly

### Disassembling the Washer and Dryer

The washer and dryer cannot be disassembled and installed for use side by side. If it is necessary to disassemble the appliance in order to move or reinstall it, follow these instructions.

**WARNING**

- Protect your hands and arms from sharp edges. To reduce the risk of injury to persons, adhere to all industry recommended safety procedures including the use of long-sleeved gloves and safety glasses.

**NOTE**

- Any damage resulting from improper disassembly/assembly or installation of the product is not covered by the product warranty.

**1** Be sure to unplug the appliance.

**2** Loosen screws assembled on the stacking bracket on the back of the appliance.

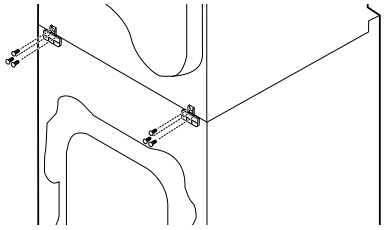

**3** Push open the caps at the left and right sides of the control panel on the front of the appliance. Loosen the screws under the caps.

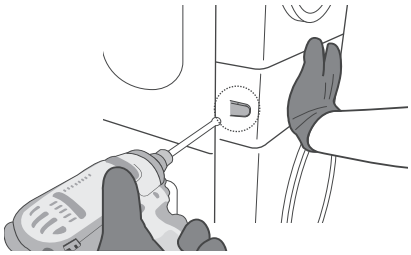

**4** Pull the control panel forward to remove it.

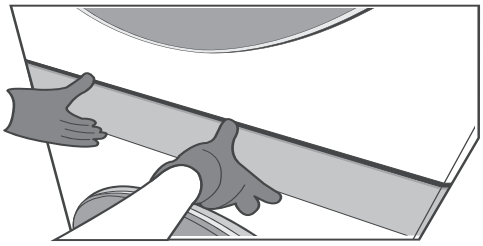

**5** Disconnect the wire harnesses from the washer ❶ and dryer ❷ to the control panel.

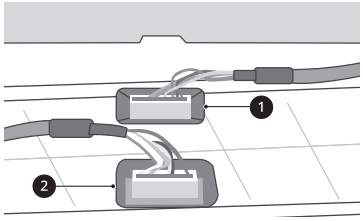


**CAUTION**

- Always ground yourself before touching the PCB or wiring. Discharge of static electricity may cause product malfunction.

**NOTE**

- Tuck the wire harnesses to the side to avoid pinching them.

**6** Unscrew the second screw from the top of the four screws on the left and right.

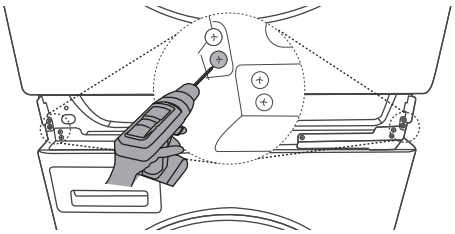

**7** Lift the dryer and separate it from the washer.

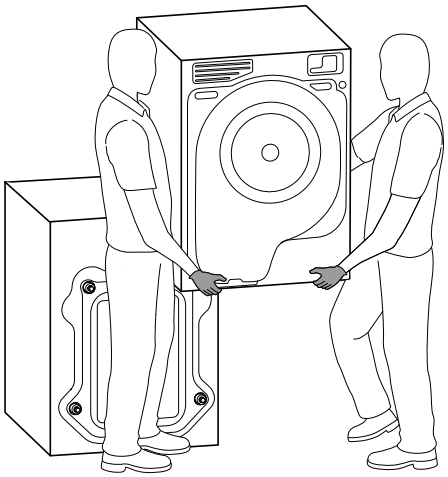

**WARNING**

- Protect your hands and arms from sharp edges of the panel frame exposed on the top of the washer.
- To avoid strain injuries, use 2 or more people to lift the dryer.

**NOTE**

- When assembling the appliance, proceed in reverse order.

LG

Life's Good

| LG Customer Information Center | |
|---|---|
| For inquiries or comments, visit **www.lg.com** or call: | |
| 1-800-243-0000 | U.S.A. |
| 1-888-542-2623 | CANADA |
| Register your product Online! | |
| www.lg.com | |