LG
Life's Good

OWNER'S MANUAL

Wireless Sound Bar

Please read this manual carefully before operating your set and retain it for future reference.

MODEL

SJ4R (SJ4R, SPJ4B-W), SPJ4-S (SPJ4-S, S65S3-S)



www.lg.com

Copyright © 2017 LG Electronics Inc. All Rights Reserved.

Safety Information



CAUTION: TO REDUCE THE RISK OF ELECTRIC SHOCK DO NOT REMOVE COVER (OR BACK) NO USER-SERVICEABLE PARTS INSIDE REFER SERVICING TO QUALIFIED SERVICE PERSONNEL.



This lightning flash with arrowhead symbol within an equilateral triangle is intended to alert the user to the presence of uninsulated dangerous voltage within the product's enclosure that may be of sufficient magnitude to constitute a risk of electric shock to persons.



The exclamation point within an equilateral triangle is intended to alert the user to the presence of important operating and maintenance (servicing) instructions in the literature accompanying the product.

WARNING: TO PREVENT FIRE OR ELECTRIC SHOCK HAZARD, DO NOT EXPOSE THIS PRODUCT TO RAIN OR MOISTURE.

CAUTION: The apparatus should not be exposed to water (dripping or splashing) and no objects filled with liquids, such as vases, should be placed on the apparatus.

WARNING: Do not install this equipment in a confined space such as a book case or similar unit.

CAUTION: Do not use high voltage products around this product. (ex. Electrical swatter) This product may malfunction due to electrical shock.

CAUTION: No naked flame sources, such as lighted candles, should be placed on the apparatus.

CAUTION: Do not block any ventilation openings. Install in accordance with the manufacturer's instructions.
Slots and openings in the cabinet are provided for ventilation and to ensure reliable operation of the product and to protect it from over heating. The openings shall be never be blocked by placing the product on a bed, sofa, rug or other similar surface. This product shall not be placed in a built-in installation such as a bookcase or rack unless proper ventilation is provided or the manufacturer's instruction has been adhered to.

CAUTION concerning the Power Cord

The Power Plug is the disconnecting device. In case of an emergency, the Power Plug must remain readily accessible.

Check the specification page of this owner's manual to be certain of the current requirements.

Do not overload wall outlets. Overloaded wall outlets, loose or damaged wall outlets, extension cords, frayed power cords, or damaged or cracked wire insulation are dangerous. Any of these conditions could result in electric shock or fire. Periodically examine the cord of your device, and if its appearance indicates damage or deterioration, unplug it, discontinue use of the device, and have the cord replaced with an exact replacement part by an authorized service center. Protect the power cord from physical or mechanical abuse, such as being twisted, kinked, pinched, closed in a door, or walked upon. Pay particular attention to plugs, wall outlets, and the point where the cord exits the device.

NOTICE: For safety marking information including product identification and supply ratings, please refer to the main label on the bottom or the other surface of the product.

This device is equipped with a portable battery or accumulator.

How to Safely remove the battery or the battery pack from the equipment: To remove the old battery or battery pack, follow the assembly steps in reverse order. To prevent contamination of the environment and bring on possible threat to human and animal health, the old battery or the battery put it in the appropriate container at designated collection points. Do not dispose of batteries or battery pack together with other waste. It is recommended that you use local, free reimbursement systems batteries and accumulators. The battery shall not be exposed to excessive heat such as sunshine, fire or the like.

For models using an adapter

Only use the AC adapter supplied with this device. Do not use a power supply from another device or another manufacturer. Using any other power cable or power supply may cause damage to the device and void your warranty.

Symbols

~	Refers to alternating current (AC).
⎓	Refers to direct current (DC).
⧈	Refers to class II equipment.
⏻	Refers to stand-by.
|	Refers to “ON” (power).
⚡	Refers to dangerous voltage.

OPEN SOURCE SOFTWARE NOTICE INFORMATION

To obtain the source code under GPL, LGPL, MPL, and other open source licenses, that is contained in this product, please visit http://opensource.lge.com.

In addition to the source code, all referred license terms, warranty disclaimers and copyright notices are available for download.

LG Electronics will also provide open source code to you on CD-ROM for a charge covering the cost of performing such distribution (such as the cost of media, shipping and handling) upon email request to opensource@lge.com. This offer is valid for three (3) years from the date on which you purchased the product.

Table of Contents

1 Getting Started

2 Safety Information
6 Unique features
6 Introduction
6 – Symbols used in this manual
7 Remote control
8 Front panel
8 Rear panel
9 About LED condition
10 Installing the sound bar
10 Mounting the main unit on a wall
12 Positioning the speakers

2 Connecting

13 Connecting the AC Adapter
13 Wireless subwoofer and rear speaker connection
13 – Wireless subwoofer connection
15 – Rear speakers connection
16 – Surround sound
17 – How to Affix the Ferrite Core
18 Connecting to your TV
18 – Using an OPTICAL cable
18 – LG Sound Sync
20 – Using an HDMI cable
21 – Additional information for HDMI
22 Optional equipment connection
22 – HDMI connection
23 – OPTICAL IN connection
23 – PORTABLE IN connection
24 – USB connection
24 – Compatible USB devices
24 – USB device requirement
25 – Playable file

3 Operating

26 Basic operations
26 – USB operation
26 Other operations
26 – Turn off the sound temporarily
26 – Using your TV remote control
27 – Auto power down
27 – AUTO POWER On/Off
28 – Auto function change
28 – Quick Start
29 Using BLUETOOTH® technology
29 – Listening to music stored on the BLUETOOTH devices
31 Using BLUETOOTH App
31 – Install "Music Flow Bluetooth" App onto Your BLUETOOTH Device
31 – Activate Bluetooth with "Music Flow Bluetooth" App
33 Sound adjustment
33 – Setting sound effect
33 – Adjust the subwoofer level settings
33 – Adjust the rear speakers level settings

4 Troubleshooting

34 Troubleshooting
34 – General
35 – NOTES to use wireless
36 – NOTES to release Demo mode

5 Appendix

37 Trademarks and licenses
38 Specifications
40 Maintenance
40 – Handling the unit

Unique features

Auto power down

This unit will turn off by itself for energy saving consumption.

LG Sound Sync

Controls volume level of this unit by the remote control of your LG TV that is compatible with LG Sound Sync.

BLUETOOTH®

Listens to music stored on your **Bluetooth** device.

Surround sound

You can enjoy surround sound by using Wireless Rear Speaker kit. (SPJ4-S)

Introduction

Symbols used in this manual

Note

Indicates special notes and operating features.

Caution

Indicates cautions for preventing possible damages from abuse.

Remote control

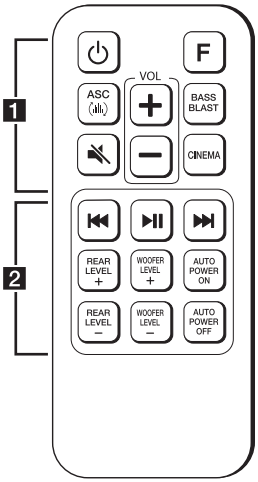

Replacement of Battery

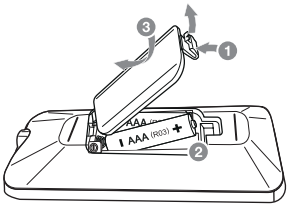

Remove the battery cover on the rear of the remote control, and insert the battery ⊕ with ⊖ and matched correctly.

1

⏻ (Power) **:** Switches the unit ON or OFF.

F : Selects the function and the input source.

ASC **:** Analyzes the property of input sound and provides the sound optimized for the content in real time.

BASS BLAST :

- Selects reinforced bass sound.
- Turns on using your tv remote control function (Refer to the page 26.)

CINEMA :

- Selects cinematic surround sound.
- Turns off using your tv remote control function (Refer to the page 26.)

VOL +/— : Adjusts speaker volume.

(Mute) **:** Mutes the sound.

2

⏮ / ⏭ (Skip/Search) **:**
- Skips Fast backward or Forward.
- Searches for a section within a file.

⏯ (Play/Pause) **:** Starts playback. / Pauses playback.

REAR LEVEL +/— :

- Adjusts sound level of rear speakers.
- Turns on or off Surround function. (Refer to the page 16.)

WOOFER LEVEL +/— : Adjusts sound level of subwoofer.

AUTO POWER ON/OFF :

- Turns on or off AUTO POWER function. (Refer to the page 27.)
- Turns on or off the **Bluetooth** connection lock. (Refer to the page 30.)

Front panel

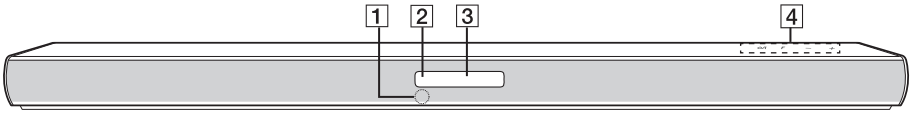

1 Remote sensor
2 Standby LED (Red)
3 Function LED (White)

4 **The buttons are located on the rear.**

Rear panel

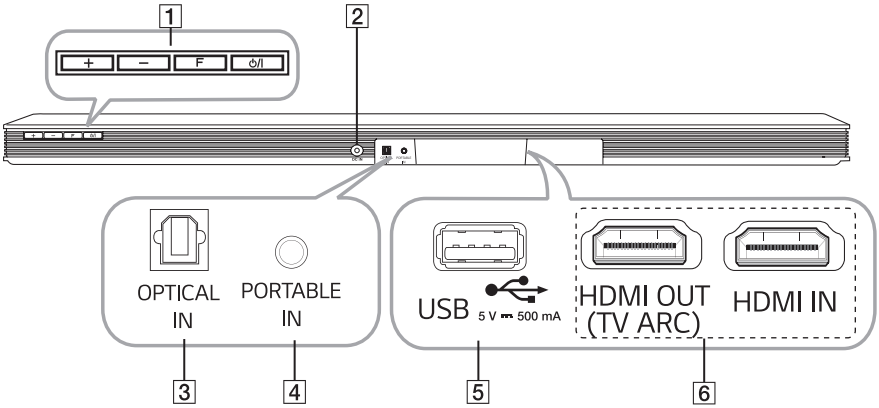

1 **+ / —**: (Volume) **:** Adjusts volume level
F (Function) **:** Selects the function and input source.
⏻ **/ I** (Standby/On)

2 **DC IN :** AC adapter input
3 **OPTICAL IN :** Optical input
4 **PORTABLE IN :** Portable input
5 **USB**
6 **HDMI OUT (TV ARC) / IN :** HDMI output / input

About LED condition

LED	Condition	Description
	OPTICAL LED turns on.	OPTICAL function is selected.
	OPTICAL LED blinks twice and turns on.	LG sound sync (Optical) function is selected.
	USB LED turns on.	USB function is selected.
	USB LED blinks.	Paused USB playback.
	BT (**Bluetooth**) LED turns on.	Paired with **Bluetooth** device.
	BT (**Bluetooth**) LED blinks.	Waiting for **Bluetooth** connection.
	LG TV LED turns on.	LG Sound Sync (Wireless) function is selected.
	HDMI IN LED turns on.	HDMI IN function is selected.
	LG TV and HDMI IN LEDs turn on.	PORTABLE function is selected.
	USB and BT (**Bluetooth**) LEDs turn on.	ARC function is selected

Note

- When you press any button, standby LED (Red) on the main unit blinks.
- When you press (Mute) button, standby LED (Red) blinks slowly.
- When this unit reaches minimum volume, standby LED (Red) turns on for 2 seconds and blinks slowly.
- When this unit reaches maximum volume, standby LED (Red) turns on for 2 seconds.
- When you press volume (+/—) button continually, standby LED (Red) blinks quickly.

Installing the sound bar

You can hear the sound by connecting the unit to the other device : TV, Blu-ray disc player, DVD player, etc.

Place the unit in front of the TV and connect it to the device you want. (Refer to pages 18 - 25.)



Caution

- For best performance of wireless connection such as **Bluetooth** or wireless subwoofer, do not install the unit on Metallic furniture because wireless connection communicates through a module positioned on the bottom of the unit.
- Be careful not to make scratches on the surface of the Unit / Subwoofer when installing or moving them.

Mounting the main unit on a wall

You can mount the main unit on a wall.



Caution

Because it is difficult to make a connection after installing this unit, you should connect the cables before installation.

Preparation materials

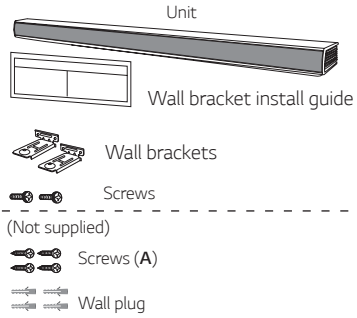

1. Match the TV's BOTTOM EDGE of Wall bracket install guide with the bottom of TV and attach to the position.

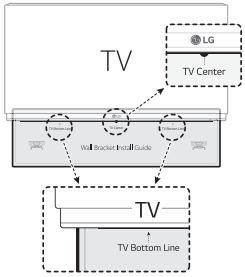

2. When you mount it on a wall (concrete), use the wall plugs. You should drill some holes. A guide sheet (Wall bracket install guide) is supplied to drill. Use the sheet to check the point to drill.

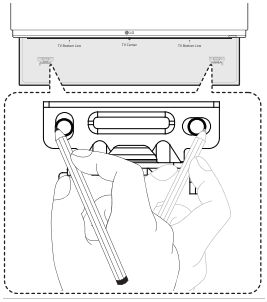

3. Remove the Wall bracket install guide.

4. Fix the brackets with screws (**A**) as shown in the illustration below.

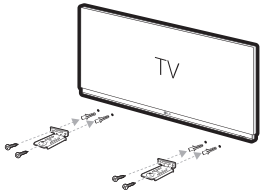

Note

Screws (**A**) and Wall Plugs are not supplied for mounting the unit. We recommend the Hilti (HUD-1 6 x 30) for the mounting.

5. Put the unit on the brackets to match screw holes on the bottom of the unit.

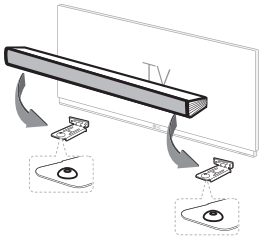

6. Fix the unit with the screws firmly.

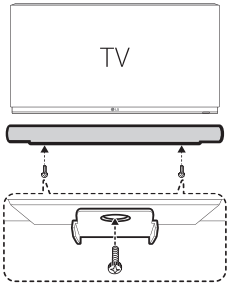

Note

To detach the unit, perform it in reverse order.

Caution

- Do not install this unit upside down. It can damage the parts of this unit or be the cause of personal injury.
- Do not hang onto the installed unit and avoid any impact to the unit.
- Secure the unit firmly to the wall so that it does not fall off. If the unit falls off, it may result in an injury or damage to the product.
- When the unit is installed on a wall, please make sure that a child does not pull any of connecting cables, as it may cause it to fall.

Positioning the speakers

For the best surround sound, place the speaers as shown below.

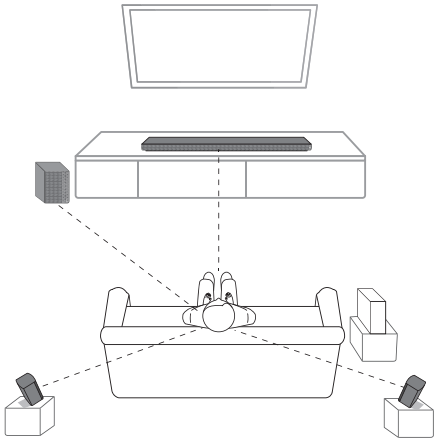

Connecting the AC Adapter

Connect the speaker to the power supply with the supplied AC adapter.

1. Connect the supplied AC power cord to the AC adapter.
2. Connect the AC adapter cable to DC IN adapter input.
3. Plug the AC power cord into an AC outlet.

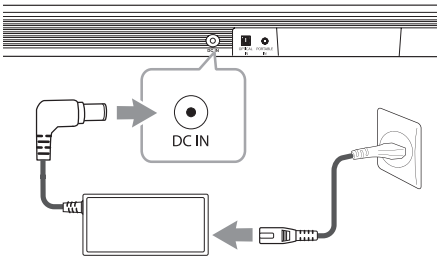

Caution

Only use the AC adapter supplied with this device. Do not use a power supply from another device or manufacturer. Using any other power cable or power supply may cause damage to the device and void your warranty.

Wireless subwoofer and rear speaker connection

Wireless subwoofer connection

LED indicator of wireless subwoofer

LED Color	Status
Green (Blink)	Attempting to make connection.
Green	The connection is completed.
Red	The wireless subwoofer is in standby mode or the connection is failed.
Off (No display)	The power cord of wireless subwoofer is disconnected.

Setting up the wireless subwoofer for the first time

1. Connect the power cord to the subwoofer and plug the power cord into a power outlet.
2. Turn on the main unit : The sound bar and wireless subwoofer will be **automatically** connected.
   - Green LED on the rear of wireless subwoofer turns on.

Manually pairing wireless subwoofer

When your connection is not completed, you can check red LED on the wireless subwoofer and the wireless subwoofer does not make sound. To solve the problem, follow the steps below.

1. Press **Pairing** button on the rear of the wireless subwoofer.

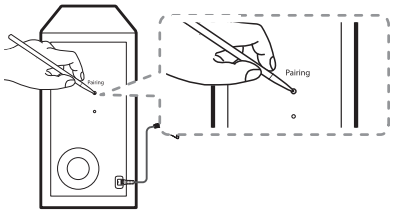

   - The green LED on the rear of the wireless subwoofer blinks quickly.
2. Turn on the main unit.
3. Pairing is completed.
   - The green LED on the rear of the wireless subwoofer turns on.

Note

- It takes a few seconds (and may take longer) for the main unit and the subwoofer to communicate with each other and make sounds.
- The closer the main unit and the subwoofer, the better sound quality. It is recommended to install the main unit and the subwoofer as close as possible and avoid the cases below.
  - There is a obstacle between the main unit and the subwoofer.
  - There is a device using same frequency with this wireless connection such as a medical equipment, a microwave or a wireless LAN device.
  - Keep the sound bar and the subwoofer away from the device (ex. wireless router, microwave oven, etc.) over 1m to prevent wireless interference.

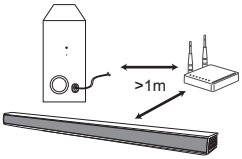

Rear speakers connection

Connecting the rear speakers

1. Connect the black stripe wire to the terminal marked - (minus) and the other end to the terminal marked + (plus).

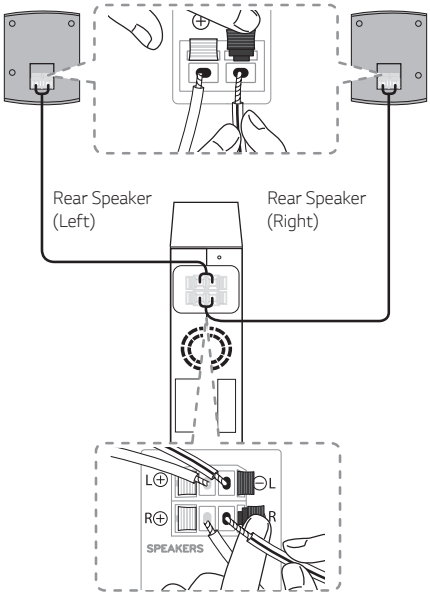

2. Connect the wireless receiver and the rear speakers (right, left) with the speaker cables.

Color	Position
Grey	Rear right
Blue	Rear left

Caution

- Use the speaker supplied with this unit only. Using any other speaker may cause malfunction.
- Be sure to match the speaker cable to the appropriate terminal on the components: + to + and – to –. If the cables are reversed, the sound will be distorted and will lack bass.

LED indicator of wireless receiver

LED Color	Status
Yellow - green	The wireless receiver is receiving the signal from the sound bar.
Red	The wreless receiver is in standby mode.
Off (No display)	The power cord of wireless receiver is disconnected.

Setting up the wireless receiver for the first time

1. Connect the power cord to the wireless receiver to the outlet.
2. Turn on the main unit : The sound bar and wireless receiver will be **automatically** connected.
   - Yellow - green LED on the wireless receiver turns on.

Manually pairing wireless receiver

When your connection is not completed, you can see the red LED on the wireless receiver and rear speakers are not made sound. To solve the problem, follow the below steps.

1. Press **PAIRING** button on the rear of the wireless receiver.

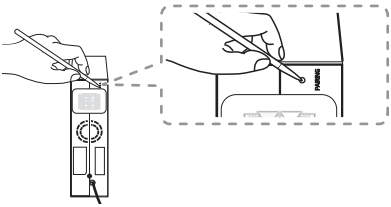

   - The yellow - green LED on the wireless receiver blinks quickly.
2. Turn on the main unit
3. Paring is completed.
   - The yellow - green LED on the wireless receiver turns on.

Surround sound

You can enjoy magnificent surround sound for all the input sound source with rear speakers.

If you turn on the surround function, the whole speaker outputs sound.
When you turn off the surround function, the speakers output sound as an original input sound channel.

To turn on surround function, press and hold **REAR LEVEL** + button for about 2 seconds.

To turn off surround function, press and hold **REAR LEVEL** — button for about 2 seconds

Note

BASS BLAST or **STANDARD** sound effects may be applied differently depending on regional option.

Surround function ON

Sound Effect	Input	Output
ASC	2.0 Ch	
	5.1 Ch	
STANDARD	2.0 Ch	
	5.1 Ch	
BASS BLAST	2.0 Ch	
	5.1 Ch	
CINEMA	2.0 Ch	
	5.1 Ch	

Surround function OFF

Sound Effect	Input	Output
ASC	2.0 Ch	
	5.1 Ch	
STANDARD	2.0 Ch	
	5.1 Ch	
BASS BLAST	2.0 Ch	
	5.1 Ch	
CINEMA	2.0 Ch	
	5.1 Ch	

How to Affix the Ferrite Core

Ferrite core may not be provided depending on each nation's regulations.

Affix the Ferrite Core for speaker cables

You must affix a ferrite core in order to reduce or eliminate electrical interference.

1. Pull the stopper [a] of the ferrite core to open.
2. Wind the speaker cables around the ferrite core twice.
3. Close the ferrite core until it clicks.

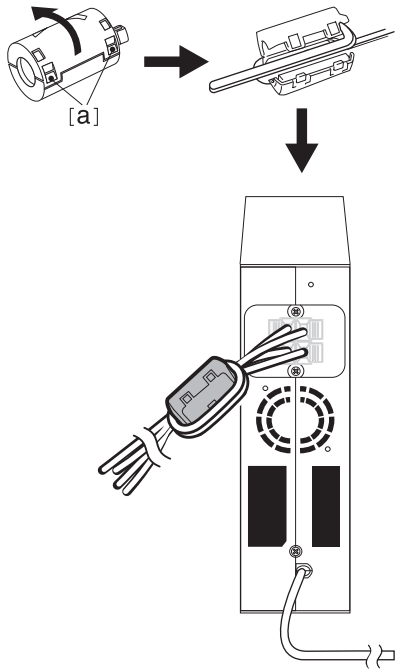

Note

- If there is a strong electromagnetic wave product nearby, interference may occur. Put the main unit and wireless receiver away from there.
- The wireless receiver will automatically switch to standby mode in a few minutes after the sound bar is turned off.
  When the wireless reciever is in standby mode, the LED will turn on in red.
- When you turn on the sound bar, the wireless receiver will turn on and the LED will change to yellow - green and then the rear speakers makes sound within a few seconds.
- It takes a few seconds (and may take longer) for the main unit and Wireless Receiver to communicate with each other.
- Use the rear speaker at least 30 cm (11.8 inches) away from either TV screen or PC monitor.
- When the wireless receiver is being connected or disconneced with the main unit, output sound is maybe interrupted.
- Set the distance between the sound bar and the wireless receiver as close as possible and keep them away from the device (ex. wireless router, microwave oven, etc.) over 1 m (3.28 ft) to prevent wireless interference.

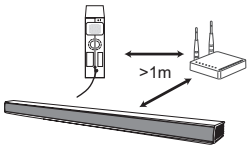

Connecting to your TV

Please connect this unit and the TV using the optical digital cable or HDMI cable considering the capability of the TV.

Using an OPTICAL cable

1. Connect the OPTICAL IN jack on the back of the unit to OPTICAL OUT jack on the TV using an OPTICAL cable.

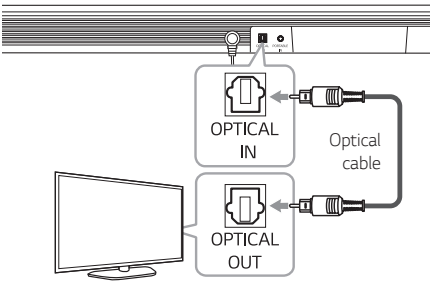

2. Select the input source to OPTICAL by pressing **F** button on the remote control or unit repeatedly.

Note

- Before connecting the optical cable, be sure to remove the protection plug cover if your cable has the cover.
- You can enjoy the TV audio through the speakers of this unit. In the case of some TV models, you must select the external speaker option from the TV menu. (For details, reference your TV user manual.)
- Set up the sound output of TV to listen to the sound through this unit :
  TV setting menu → [Sound] → [TV Sound output] → [External speaker (Optical)]
- Details of TV setting menu vary depending on the manufacturers or models of your TV.
- If this unit is connected by OPTICAL and ARC at the same time, the ARC signal is a high priority.

LG Sound Sync

Sound Sync Wireless

You can control some functions of this unit by your TV's remote control with LG Sound Sync. It is compatible with an LG TV that supports LG Sound Sync. Make sure there is an LG Sound Sync logo on your TV.

Controllable function by LG TV's remote control : Volume up/down, mute

Refer to the TV's instruction manual for the details of LG Sound Sync.

Make one of the following connections, depending on the capabilities of your equipment.

Note

- You can also use the remote control of this unit while using LG Sound Sync. If you use TV's remote control again, the unit synchronizes with the TV.
- When the connection fails, make sure of the condition of the TV and power.
- Make sure of the condition of this unit and the connection in the cases below when using LG Sound Sync.
  - The unit is turned off.
  - Changing from one function to another.
  - Disconnecting the optical cable.
  - Disconnecting the wireless connection caused by interference or distance.
- The amount of time to turn off this unit is different depending on your TV when you set AUTO POWER function to ON.
- The details of the TV settings menu may vary depending on the model of your TV.

With wired connection

1. Connect your LG TV to the unit by using an optical cable.

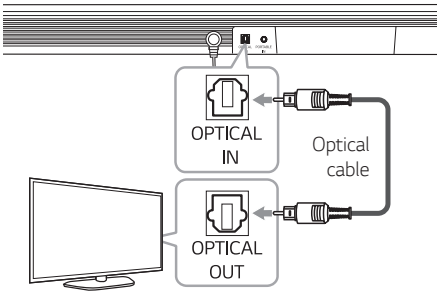

2. Set up the sound output of TV to listen to the sound through this unit :
   TV setting menu → [Sound] → [TV Sound output] → [LG Sound Sync (Optical)]
3. Turn on the unit by pressing ⏻ on the remote control or ⏻ / I on the unit.
4. Select the input source to OPTICAL by pressing **F** button on the remote control or on unit repeatedly.

With wireless connection

1. Turn on the unit by pressing ⏻ on the remote control or ⏻ / I on the unit.
2. Select the input source to LG TV by pressing **F** button on the remote control or unit repeatedly.
3. Set up the sound output of TV to listen to the sound through this unit :
   TV setting menu → [Sound] → [TV Sound output] → [LG Sound Sync (Wireless)]

Note

If you turned off the unit directly by pressing ⏻ on the remote control or ⏻ / I on the unit., LG Sound Sync (Wireless) will be disconnected. To use this function again, you should reconnect the TV and the unit.

Using an HDMI cable

If you connect this unit to a TV that supports HDMI CEC and ARC (Audio Return Channel), you can enjoy the TV audio through the speakers of this unit without connecting the optical cable. Please refer to your TV user manual when you check HDMI CEC/ARC function of your TV.

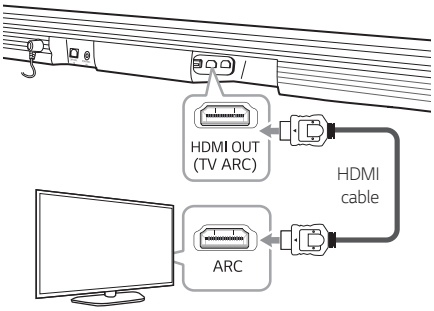

Note

- ARC function is automatically selected when ARC signal comes in from TV, no matter what kind of the function you are using.
- You can enjoy the TV audio through the speakers of this unit. In the case of some TV models, you must select the external speaker option from the TV menu. (For details, reference your TV user manual.)
- Set up the sound output of TV to listen to the sound through this unit :
  TV setting menu → [Sound] → [TV Sound output] → [External speaker (HDMI ARC)]
- Depending on your LG TV model, you may need to turn on the SIMPLINK function on your LG TV.
- Details of the TV settings menu may vary depending on the manufacturer or model of your TV.
- When you return to ARC function from another function, you need to select the input source to OPTICAL. Then this unit changes to ARC function automatically.

ARC (Audio Return Channel) function

The ARC function enables an HDMI capable TV to send the audio stream to HDMI OUT of the unit.

To use this function :

- Your TV must support the HDMI-CEC and ARC function and the HDMI-CEC and ARC must be set to On.
- The setting method of HDMI-CEC and ARC may differ depending on the TV. For details about ARC function, refer to your TV manual.
- You must use the HDMI cable (Type A, High Speed HDMI™ cable with Ethernet).
- You must connect the HDMI OUT on the unit with HDMI IN of the TV that supports ARC function using an HDMI cable.
- You can connect only one Sound bar to TV compatible with ARC.

What is SIMPLINK?

Some functions of this unit are controlled by the TV's remote control when this unit and LG TVs with SIMPLINK are connected through HDMI connection.

Controllable functions by LG TV's remote control : Power on/off, volume up/down, mute, etc.

Refer to the TV owner's manual for the details of SIMPLINK function.

LG TV's with SIMPLINK function has the logo as shown above.

Note

- Depending on the state of the unit, some SIMPLINK operation may differ from your purpose or not work.
- Depending on a TV or a player which is connected with this unit, SIMPLINK operation may differ from your purpose.

Additional information for HDMI

- When you connect an HDMI or DVI compatible device make sure of the following:
  - Try switching off the HDMI/DVI device and this player. Next, switch on the HDMI/DVI device and leave it for around 30 seconds, then switch on this player.
  - The connected device's video input is set correctly for this unit.
  - The connected device is compatible with 720 x 576p (or 480p), 1280 x 720p, 1920 x 1080i or 1920 x 1080p video input.
- Not all HDCP-compatible HDMI or DVI devices will work with this player.
  - The picture will not be displayed properly with non-HDCP device.

Note

- If a connected HDMI device does not accept the audio output of the player, the HDMI device's audio sound may be distorted or may not output.
- Changing the resolution when the connection has already been established may result in malfunctions. To solve the problem, turn off the player and then turn it on again.
- When the HDMI connection with HDCP is not verified, the TV screen is changed to black. In this case, check the HDMI connection, or disconnect the HDMI cable.
- If there are noises or lines on the screen, please check the HDMI cable (length is generally limited to 4.5 m(15 ft).
- You cannot change the video resolution in the HDMI IN mode. Change the video resolution of the connected component.
- If the video output signal is abnormal when your personal computer is connected to HDMI IN jack, change the resolution of your personal computer to 576p (or 480p), 720p, 1080i or 1080p.

HDMI cable Checklist

Some HDMI cables do not support the ARC function, this can result in no sound output.

When connecting this unit to the TV, if there is no sound, there might be a problem with the HDMI cable. Therefore connect this unit to the TV and check whether the Type A, High speed HDMI™ Cable with Ethernet.

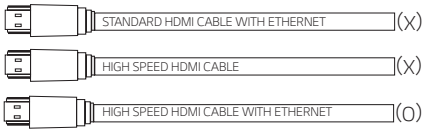

Connection through HDMI Cable

Your television must support the newest HDMI features (HDMI CEC[1)] / ARC (Audio Return Channel)) to fully enjoy the Live broadcasting channel with audio system through an HDMI cable. Unless your TV supports these HDMI features, the audio system should be connected through an OPTICAL cable.

1) HDMI CEC (High-Definition Multimedia Interface Consumer Electronics Control)

Consumer Electronics Control (CEC) is an HDMI feature designed to allow the user to command and control the CEC-enabled devices, that are connected through HDMI by using only one of their remote controls.

※ Trade names for CEC are SimpLink (LG) , Anynet+ (Samsung), BRAVIA Sync/ Link (Sony), EasyLink (Philips), EZ-Sync/ VIERA Link (Panasonic), etc..

Optional equipment connection

HDMI connection

You can enjoy the sound and picture from HDMI connection on external device.

For enjoying sound only

You can enjoy the sound from the external device you connect.

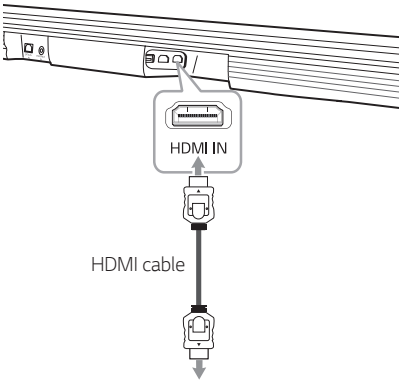

To the Blu-ray disc player, DVD player, etc.

1. Connect HDMI IN jack on the back of the unit to HDMI OUT jack on the audio device such as Blu-ray disc player, DVD player, etc.
2. Select the input source to HDMI IN by pressing **F** button on the remote control or unit repeatedly.

For enjoying both sound and picture

You can enjoy both sound and picture from the external device you connect.

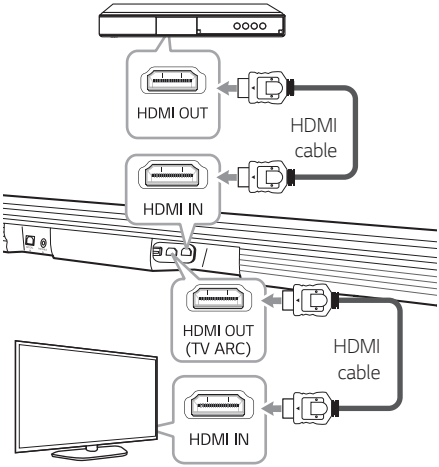

1. Connect HDMI IN jack on the back of the unit to HDMI OUT jack on the external device such as Blu-ray disc player, DVD player, etc.
2. Connect HDMI OUT (TV ARC) jack on the back of the unit to HDMI IN jack on the TV.
3. Select the input source to HDMI IN by pressing **F** button on the remote control or unit repeatedly.

Note

- Audio and Video signal can't pass through when this unit is turned off.
- HDMI OUT (TV ARC) jack is for TV connection. Even though multi channel is inputted to the unit through an HDMI cable, the unit can only output PCM 2 channel to TV.

OPTICAL IN connection

Connect an optical output jack of external devices to the OPTICAL IN jack.

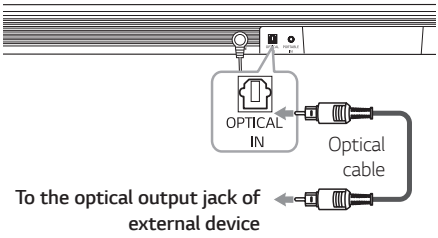

1. Connect the OPTICAL IN jack on the back of the unit to optical out jack of your external device.
2. Select the input source to OPTICAL by pressing **F** button on the remote control or unit repeatedly.
3. Listen to sound.

Note

Before connecting the optical cable, be sure to remove the protection plug cover if your cable has the cover.

PORTABLE IN connection

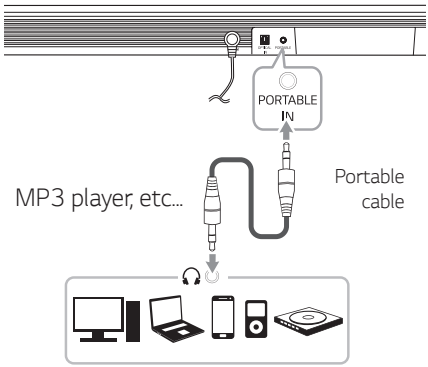

Listening to music from your portable player

The unit can be used to play the music from many types of portable players or external devices.

1. Connect the portable player to the PORTABLE IN connector of the unit by using 3.5 mm stereo cable.
2. Select the input source to PORTABLE by pressing **F** button on the remote control or unit repeatedly.
3. Turn on the portable player or external device and start playing it.

USB connection

Connect USB memory device to the USB port on the back of the unit.

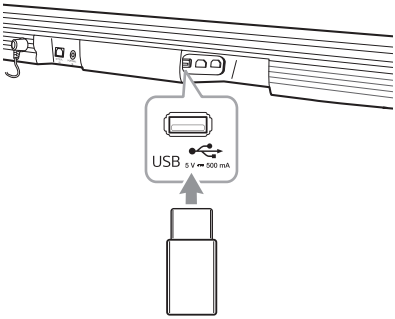

Note

If an HDMI cable is connected on the unit, inserting a USB device may be hampered depending on a USB device shape.

For more information of playing files on a USB, refer to the page 26.

Removing the USB Device from the unit.

1. Choose a different function/mode.
2. Remove the USB device from the unit.

Compatible USB devices

- MP3 Player : Flash type MP3 player.
- USB Flash Drive : Devices that support USB 2.0.
- The USB function of this unit does not support some USB devices.

USB device requirement

- Devices which require additional program installation connected to a computer, are not supported.
- Do not extract the USB device while in operation.
- For a large capacity USB, it may take longer than a few minutes to be searched.
- To prevent data loss, back up all data.
- This unit recognizes up to 2000 files.
- The unit's USB Port cannot be connected to PC. The unit can not be used as a storage device.
- The exFAT file system is not supported on this unit. (FAT16/FAT32/NTFS systems are available.)
- Depending on some devices, it may not available to recognize the followings on this unit.
  - External HDD
  - Card readers
  - Locked devices
  - Hard type USB devices
  - USB hub
  - Using USB extension cable
  - iPhone/iPod/iPad
  - Android device

Playable file

Sampling Frequency

MP3 : within 32 to 48 kHz
WMA : within 32 to 48 kHz
OGG : within 32 to 48 kHz
FLAC : 32 kHz, 44.1 kHz, 48 kHz, 88.2 kHz, 96 kHz, 176.4 kHz and 192 kHz (16 bit/ 24 bit)
WAV : 32 kHz, 44.1 kHz, 48 kHz, 88.2 kHz, 96 kHz, 176.4 kHz and 192 kHz (16 bit/ 24 bit)

Bitrate

MP3 : within 80 to 320 kbps
WMA : within 56 to 128 kbps
OGG : within 64 to 500 kbps

- Maximum files : Up to 2000
- Maximum directories : Up to 200
- A protected file by DRM (Digital rights management) cannot be played on the unit.
- Video files in the USB storage device can not be played.
- Depending on the performance of your USB device, playback may not work well.

Note

- Folders and files on the USB are recognized as below.

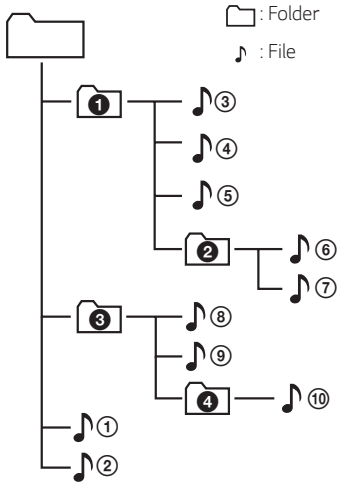

- File will be played from file ♪① to file ♪⑩ one by one.
- Files will be played in order recorded and it may be different depending on the record circumstances.
- You can't see a folder or file through this unit.

Basic operations

USB operation

1. Connect the USB device to the USB port.
2. Select the input source to USB by pressing **F** button on the remote control or unit repeatedly.

To	Do this
Playback	Press ▶II.
Pause	During playback, press ▶II.
Skip to the next/ previous file	During playback, press ▶▶I on the remote control to go to the next file. Playing less than 2 seconds, press I◀◀ on the remote control to go to the previous file. Playing after 3 seconds, press I◀◀ on the remote control to go to the beginning of the file.
Search for a section within a file	Press and hold I◀◀ / ▶▶I during playback and release it at the point you want to listen to.
Resume playback	This unit memorizes a current song which is played before changing the function or turning off the unit.

Note

- The resume point may be cleared when you pull out the power cord or removing the USB device from the unit.
- If the USB function is not working, check the USB function is selected.
- When you pause the USB playback, USB LED on the main unit blinks.

Other operations

Turn off the sound temporarily

Press (Mute) to mute your unit.

To cancel it, press (Mute) again on the remote control or change the volume level.

Using your TV remote control

You can control some functions of this unit by your TV's remote control even by another company's product. Controllable functions are volume up/down and mute.

Press and hold **BASS BLAST** on the remote control for about 2 seconds.

To turn off this function, press and hold **CINEMA** on the remote control for about 2 seconds.

Note

- Supported TV brands

LG	Panasonic	Philips	Samsung
Sharp	Sony	Toshiba	Vizio

- Make sure that the sound output of your TV is set to [External speaker].
- Depending on the remote control, this function may not work well.
- This function does not operate on LG TV's Magic Remote controls.
- This function may not work well when some TV control functions such as CEC, SIMPLINK and LG Sound Sync set to ON.

Auto power down

This unit will turn itself off to save electric consumption if the main unit is not connected to an external device and has not been used for 15 minutes.

This unit also turns off after six hours if the Main unit has been connected to another device using the analog input. (Ex : Portable, etc..)

AUTO POWER On/Off

This unit automatically turns on by an input source such as Optical, LG TV or **Bluetooth**.

When you turn on your TV or an external device connected to this unit, this unit recognizes the input signal and selects the suitable function. You can hear the sound from your device.

If you try to connect your **Bluetooth** device, this unit turns on and the unit will be connected to your **Bluetooth** device.

This function turns on or off each time you press **AUTO POWER ON/OFF.**

Note

- After the unit is turned on by AUTO POWER function, it will be automatically turned off if there is no signal for a certain period of time from the TV connected by LG Sound Sync (Optical/Wireless).
- After the unit is turned on by AUTO POWER function, it will be automatically turned off if there is no signal for a certain period of time from the external device.
- If you turned off the unit directly, it cannot be turned on automatically by the AUTO POWER function. However the unit can be turned on by the AUTO POWER function when an optical signal comes in after there has been at least 5 seconds of no signal input.
- Depending on the connected device, this function may not operate.
- If you disconnect **Bluetooth** connection by this unit, some **Bluetooth** devices try to connect to the unit continually. Therefore it is recommended to disconnect the connection before turn off the unit.
- If you want to use AUTO POWER, SIMPLINK must be turned off. It takes for about 30 seconds to switch on or off SIMPLINK.
- When you turn this unit on for the first time, the status of the Auto Power function is turned on.
- To use this function, the main unit must be registered in paired devices list of **Bluetooth** devices.
- You can set the AUTO POWER function only when this unit is turned on.

Auto function change

This unit recognizes input signals such as Optical, **Bluetooth**, LG TV and Portable and then changes to the suitable function automatically.

When an Optical Signal comes in

When you turn on the external device connected to this unit by an optical cable, this unit changes the function to optical. You can hear the sound from your device.

When you try to connect BLUETOOTH device

When you try to connect your **Bluetooth** device to this unit, **Bluetooth** function is selected. Play your music on the **Bluetooth** device.

When an LG TV Signal comes in

When you turn on your LG TV connected by LG Sound Sync (Wireless connection), this unit changes the function to LG TV. You can hear the sound from your TV.

When a Portable device is connected

When you connect your portable device using a portable cable, this unit changes the function to Portable. You can hear the music from your device.

Note

- To change to optical function, it needs at least 5 seconds of no signal.
- This unit does not change the function to optical if SIMPLINK of the connected TV, Blu-ray disc player, set-top box or etc. device set to on or connected CEC supported device is turned on.
- If you want to use the auto function change, trun off SIMPLINK function on your LG TV. It takes for about 30 seconds to turn off SIMPLINK.
- If the **Bluetooth** connection lock function is set, **Bluetooth** connection will be only available on BT (**Bluetooth**) and LG TV function. (Refer to the page 30.)

Quick Start

This unit can stay in standby mode with low power consumption, so that the unit can reduce boot time when you turn on this unit.

To turn on this function, press ⏻/I on the unit for 3 seconds when the unit is turned on.

All of the function LEDs blink twice.

To turn off this function, press ⏻/I on the unit for 3 seconds again when the unit is turned on.

The standby LED blinks twice and turn on the currnet function's LED.

Note

- If the Quick start function is set and an AC power is accidently re-connected to the unit by power failure etc., the Quick start function will activate when the unit is turned on and off once.
- When the Quick start function is set, power consumption will be higher than when the Quick start is off.
- This function may not work depending on the models.

Using BLUETOOTH® technology

About BLUETOOTH

Bluetooth is wireless communication technology for short range connection.

The sound may be interrupted when the connection has interference from other electronic waves or when you connect **Bluetooth** in the other rooms.

Connecting individual devices under **Bluetooth** wireless technology does not incur any charges. A mobile phone with **Bluetooth** wireless technology can be operated via the Cascade if the connection was made via **Bluetooth** wireless technology.

- Available Devices : Smart phone, MP3, Notebook, etc..
- Version : 4.0
- Codec : SBC

BLUETOOTH Profiles

In order to use **Bluetooth** wireless technology, devices must be able to interpret certain profiles.This unit is compatible with following profile.

A2DP (Advanced Audio Distribution Profile)

Listening to music stored on the BLUETOOTH devices

Pairing your unit and a BLUETOOTH device

Before you start the pairing procedure, make sure that the **Bluetooth** feature is turned on in your **Bluetooth** device. Refer to your **Bluetooth** device's user guide. Once a pairing operation is performed, it does not

need to be performed again.

1. Select the input source to BT (**Bluetooth**) by pressing F button repeatedly. BT (**Bluetooth**) LED blinks.
2. Operate the **Bluetooth** device and perform the pairing operation. When searching for this unit with the **Bluetooth** device, a list of the devices found may appear in the **Bluetooth** device display depending on the type of **Bluetooth** device. Your unit appears as "LG SJ4R (XX)"

Note

- XX means the last two digits of **Bluetooth** address. For example, if your unit has a **Bluetooth** address such as 9C:02:98:4A:F7:08, you will see "LG SJ4R (**08**)" on your **Bluetooth** device.
- Depending on the **Bluetooth** device type, some device have a different pairing way. Enter the PIN code (0000) as needed.

3. When this unit is successfully connected with your **Bluetooth** device, BT (**Bluetooth**) LED will be turned on.
4. Listen to music.
   To play a music file stored on your Bluetooth device, refer to your **Bluetooth** device's user guide.

Note

- When using **Bluetooth** technology, you have to make a connection between the unit and the **Bluetooth** device as close as possible and keep the distance short.
  However it may not work well in the case below :
  - If there is a obstacle between the unit and the **Bluetooth** device.
  - If there is a device using the same frequency as the **Bluetooth** technology such as medical equipment, a microwave or a wireless LAN device.
- You should connect your **Bluetooth** device to this unit again when you restart it.
- The sound may be interrupted when the connection has interference by other electronic waves.
- Pairing is limited to one **Bluetooth** device per unit and multi-pairing is not supported.
- Depending on the type of the device, you may not be able to use the **Bluetooth** function.
- You can enjoy **Bluetooth** function using smart phone, MP3, Notebook, etc..
- The more distance between the unit and the **Bluetooth** device, the lower the sound quality becomes.
- **Bluetooth** connection will be disconnected when the unit is turned off or the **Bluetooth** device gets far from the unit.
- When the **Bluetooth** connection is disconnected, connect the **Bluetooth** device to the unit again.

Note

- When **Bluetooth** device is not connected, BT (**Bluetooth**) LED blinks.
- When you connect **Bluetooth** device (iOS device etc.) to this unit or operate the device, the volume level can be synchronized with each other.
- You can control **Bluetooth** device using ⏮ / ⏭ (Skip) and ⏯ (Play/Pause) buttons on the remote control.
- If you change to another function after connecting **Bluetooth**, **Bluetooth** connection will be disconnected. When you return to **Bluetooth** function, **Bluetooth** connection will be connected automatically.

BLUETOOTH connection lock (BT lock)

You can limit **Bluetooth** connections to only BT (**Bluetooth**) and LG TV function to prevent unintended **Bluetooth** connections.

Press and hold **AUTO POWER ON** on the remote control for about 2 seconds to turn on this function in BT (**Bluetooth**) function.

To turn off this function, press and hold **AUTO POWER OFF** on the remote control for about 2 seconds in BT (**Bluetooth**) function.

Note

Even if you set up **Bluetooth** connection lock to On, this sound bar turns on by Auto Power function. Turn off Auto Power function to prevent it.

Using BLUETOOTH App

Note

- Only Android OS is available to use "Music Flow Bluetooth" app with this unit.
- Additional data charges may occur if installed over 3G/4G, according to your device plan.

About "Music Flow Bluetooth" App

"Music Flow Bluetooth" app brings a suite of new features to this unit.

To enjoy more features, it is recommended that you download and install the free "Music Flow Bluetooth" app.

Install "Music Flow Bluetooth" App onto Your BLUETOOTH Device

There are two ways to install "Music Flow Bluetooth" app onto your **Bluetooth** device.

Install "Music Flow Bluetooth" App through QR code

1. Install "Music Flow Bluetooth" app through QR code. Use the scanning software to scan the QR code.

2. Tap an icon for installation.

Note

- Make sure that your **Bluetooth** device is connected to the Internet.
- Make sure that your **Bluetooth** device has a scanning software application. If you don't have one, download one from "Google Android Market (Google Play Store)".
- Depending on area, QR code may not work.

Install "Music Flow Bluetooth" App through "Google Android Market (Google Play Store)"

1. Tap the "Google Android Market (Google Play Store)" icon.
2. In the search bar, type in "Music Flow Bluetooth" and then tap search.
3. In the search result list, find and tap "Music Flow Bluetooth" to start downloading **Bluetooth** app.
4. Tap an icon for installation.
5. Tap an icon for downloading.

Note

- Make sure that your **Bluetooth** device is connected to the Internet.
- Make sure that your **Bluetooth** device is equipped with "Google Android Market (Google Play Store)".

Activate Bluetooth with "Music Flow Bluetooth" App

"Music Flow Bluetooth" app helps to connect your **Bluetooth** device to this unit.

1. Tap "Music Flow Bluetooth" app icon on the home screen to open "Music Flow Bluetooth" app, and go to the main menu.
2. If you want to get more information to operate, tap [Setting] and tap [Help] menu.

Note

- "Music Flow Bluetooth" app will be available in the software version as follow;
  - Android O/S : Ver 4.0.3 (or later)
- If you use "Music Flow Bluetooth" app for operation, there would be some differences between "Music Flow Bluetooth" app and the supplied remote control. Use the supplied remote control as necessary.
- Depending on the **Bluetooth** device, "Music Flow Bluetooth" app may not work.
- After connection of "Music Flow Bluetooth" app, music may be output from your device. In this case, try connecting procedure again.
- If you operate other applications or change the settings on your Bluetooth device while using "Music Flow Bluetooth" app, "Music Flow Bluetooth " app may operate abnormally.
- When "Music Flow Bluetooth" app operates abnormally, check your **Bluetooth** device and the connection of "Music Flow Bluetooth" app and then try to connect again.
- Depending on the smart phone's operating system, you have some differences for "Music Flow Bluetooth" operation.
- Even though **Bluetooth** connection will be disconnected, you can use "Music Flow Bluetooth" app when you change the function.
- Additional features offered by "Music Flow Bluetooth" app may not work depending on the distance between this unit and **Bluetooth** device and wireless conditions.

Sound adjustment

Setting sound effect

This system has a number of pre-set surround sound fields. You can select a desired sound mode by using each sound effect buttons.

The displayed items for the equalizer may be different depending on sound sources and effects.

Sound effect	Description
ASC (Adaptive Sound Control)	Analyzes the property of the input sound and provides the sound optimized for the content in real time.
BASS BLAST	Reinforces the treble, bass and surround sound effect.
CINEMA	You can enjoy more immersive and cinematic surround sound.

Note

- In some of the sound effect modes, there will be no sound or low sound from some of the speakers. It depends on the mode of sound and the source of audio, it is not a defect.
- You may need to reset the sound effect mode, after switching the input, sometimes even after the sound file changed.

Adjust the subwoofer level settings

You can adjust the sound level of subwoofer as your preference.

Press **WOOFER LEVEL +/—** button to adjust woofer level.

Note

When the subwoofer level reaches maximum or minimum , standby LED (Red) on the main unit turns on for 2 seconds.

Adjust the rear speakers level settings

You can adjust the sound level of rear speakers as your preference.

Press **REAR LEVEL +/—** button to adjust woofer level.

Note

- When the rear speaers level reaches maximum or minimum , standby LED (Red) on the main unit turns on for 2 seconds.
- Adjusting rear speakers level is applyed only when the rear speakers are connected.

Troubleshooting

General

PROBLEM	CAUSE & CORRECTION
The unit does not work properly.	• Turn off the power of this unit and the connected external device (TV, Woofer, DVD-player, Amplifier, etc.) and turn them on again. • Disconnect the power cord of this unit and the connected external device (TV, Woofer, DVD-player, Amplifier, etc.) and then try connecting again. • Previous setting may not be saved when device power is shut off.
No Power	• The power cord is unplugged. Plug in the power cord. • Check whether electricity failed. Check the condition by operating other electronic devices.
No sound	• Incorrect input source is selected. Check the input source and select the correct input source. • The mute function is activated. Press (Mute) or adjust the volume level to cancel the mute function. • When you are using connection with a external device (set top box, **Bluetooth** device etc.), adjust volume level of the device. • Connect the audio cables into the connection terminals correctly.
No woofer sound	• The power cord of the subwoofer is not connected. Plug the power cord into the wall outlet securely. • Pairing between the unit and the subwoofer gets disconnected. Connect the unit and the subwoofer. (Refer to the page 13.)
The remote control does not work properly.	• The remote control is too far from the unit. Operate the remote control within about 7 m. • There is an obstacle in the path of the remote control and the unit. Remove the obstacle. • The batteries in the remote control is exhausted. Replace the batteries with new one.
The AUTO POWER function does not work.	• Check connection of the external device such as TV, DVD/Blu-Ray player or **Bluetooth** device. • Check the state of SIMPLINK on your LG TV and turn off SIMPLINK. • Depending on the connected device, this function may not operate.
LG Sound Sync does not work.	• Check whether your LG TV supports LG Sound Sync. • Check connection of LG Sound Sync (Optical or wireless). • Check sound setting of your TV and this unit.

PROBLEM	CAUSE & CORRECTION
The unit does not connect with **Bluetooth** device	• Turn off the **Bluetooth** connection lock function. (Refer to the page 30.)
When you feel the output sound of the unit is low.	Check the details below and adjust the unit according to them. • With the sound bar connected with TV, change the AUDIO DIGITAL OUT setting on TV Setup Menu from [PCM] to [AUTO] or [BITSTREAM]. • With the sound bar connected with Player, change the AUDIO DIGITAL OUT setting on Player Setup Menu from [PCM] to [PRIMARY PASS-THROUGH] or [BITSTREAM]. • Change Audio DRC setting on connected device setup menu to [OFF] state.

NOTES to use wireless

PROBLEM	CAUSE & CORRECTION
This device may have wireless interference.	• Wireless may not operate normally in weak signal area. • Please install the device close enough to wireless subwoofer. • Do not install the device on metal furniture for optimum performance.
Bluetooth device may malfunction or make noise in the following cases.	• When any part of your body contact the transceiver of the **Bluetooth** device or sound bar. • When there is an obstacle or wall or the device is installed in a secluded spot. • When there is a device(a wireless LAN, a medical equipment or a microwave) using same frequency, make the distance between the products as far away as possible each other. • When to connecting the device to the **Bluetooth** device, make the distance between the products as close as possible each other. • When the device gets too far from the **Bluetooth** device, the connection is disconnected and also malfunction may occur.

NOTES to release Demo mode

PROBLEM	CAUSE & CORRECTION
Can not change input source with **F** button such as BT (Bluetooth), HDMI etc. and All the function LEDs are turned on.	• Unplug the power cord and plug it in again. If that doesn't work, press and hold **F** button (About 15 seconds) on the main unit until the function LED indicates current selected function.
Remote Control does not work. (No response)	

Trademarks and licenses

All other trademarks are trademarks of their respective owners.

Manufactured under license from Dolby Laboratories. Dolby, Dolby Audio, and the double-D symbol are trademarks of Dolby Laboratories.

For DTS patents, see http://patents.dts.com. Manufactured under license from DTS Licensing Limited. DTS, the Symbol, & DTS and the Symbol together are registered trademarks, and DTS Digital Surround is a trademark of DTS, Inc. © DTS, Inc. All Rights Reserved.

The **Bluetooth®** word mark and logos are registered trademarks owned by the Bluetooth SIG, Inc. and any use of such marks by LG Electronics is under license.
Other trademarks and trade names are those of their respective owners.

The terms HDMI and HDMI High-Definition Multimedia Interface, and the HDMI logo are trademarks or registered trademarks of HDMI Licensing LLC in the United States and other countries.

Specifications

General	
Power consumption	Refer to the main label.
AC adapter	• Model : DA-50F25 • Manufacturer : Asian Power Devices Inc. • Input : 100 - 240 V ~ 50 - 60 Hz 1.5 A Max. • Output : 25 V ⎓ 2 A
Dimensions (W x H x D)	Approx. 890 mm X 55 mm X 85 mm With foot
Operating temperature	5 °C to 35 °C
Operating humidity	5 % to 90 %
Bus Power Supply	5 V ⎓ 500 mA
Available Digital Input Audio Sampling Frequency	32 kHz, 44.1 kHz, 48 kHz, 88.2 kHz, 96 kHz
Available Digital Input Audio format	Dolby Audio, DTS Digital Surround, PCM

Input/Output	
OPTICAL IN (Digital audio in)	3 V (p-p), Optical jack x 1
PORTABLE IN (Portable in)	0.32 Vrms (3.5 mm stereo jack) x 1
HDMI IN	19 Pin (Type A, HDMI™ connector) x 1
HDMI OUT	19 Pin (Type A, HDMI™ connector) x 1

Amplifier (RMS Output)	
Total	420 W RMS
Front	60 W RMS x 2 (4 Ω at 1 kHz, THD 10%)
Rear	60 W RMS x 2 (3 Ω at 1 kHz, THD 10%)
Subwoofer	180 W RMS (3 Ω at 80 Hz, THD 10%)

Wireless subwoofer	
Power requirements	Refer to the main label on the wireless subwoofer.
Power consumption	Refer to the main label on the wireless subwoofer.
Type	1 Way 1 Speaker
Impedance	3 Ω
Rated Input Power	180 W RMS
Max. Input Power	360 W RMS
Dimensions (W x H x D)	Approx. 171 mm X 320 mm X 252 mm

SPJ4-S (SPJ4-S, S65S3-S)

Wireless receiver	
Power requirements	Refer to the main label on the wireless receiver.
Power consumption	Refer to the main label on the wireless receiver.
Dimensions (W x H x D)	Approx. 60 mm X 220 mm X 175 mm

Rear speakers (Each)	
Type	1 Way 1 Speaker
Impedance	3 Ω
Rated Input Power	60 W RMS
Max. Input Power	120 W RMS
Dimensions (W x H x D)	Approx. 88 mm X 122 mm X 81 mm

- Designs and specifications are subject to change without prior notice.

Maintenance

Handling the unit

When shipping the unit

Please save the original shipping carton and packing materials. If you need to ship the unit, for maximum protection, re-pack the unit as it was originally packed at the factory.

Keeping the exterior surfaces clean

- Do not use volatile liquids such as insecticide spray near the unit.
- Wiping with strong pressure may damage the surface.
- Do not leave rubber or plastic products in contact with the unit for a long period of time.

Cleaning the unit

To clean the player, use a soft, dry cloth. If the surfaces are extremely dirty, use a soft cloth lightly moistened with a mild detergent solution. Do not use strong solvents such as alcohol, benzine, or thinner, as these might damage the surface of the unit.


LG
Life's Good