www.lg.com

MFL71760813
(2102-REV01)

50UP80*
55UP80*
60UP80*
65UP80*

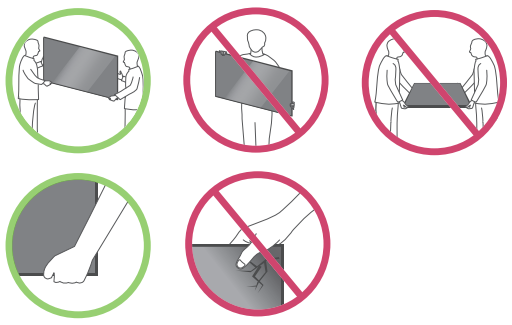

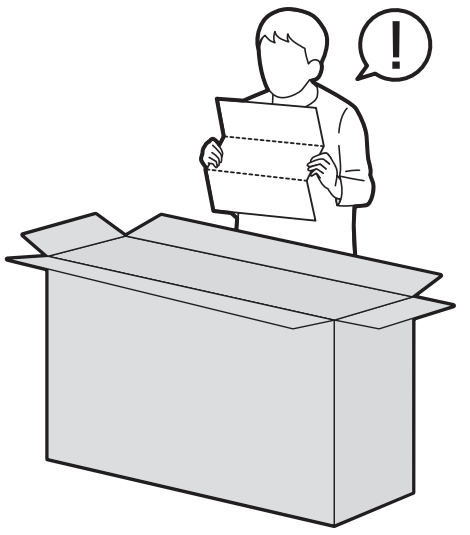

50/55UP80*

1

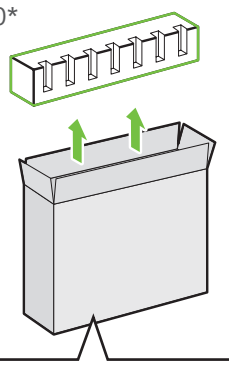

2

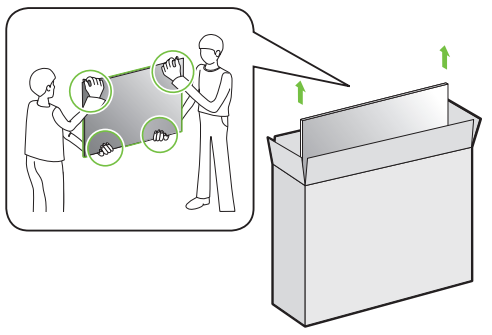

3

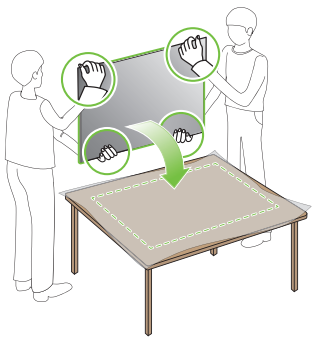

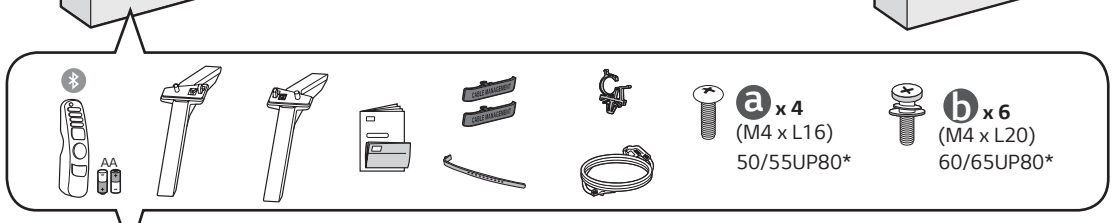

60/65UP80*

1

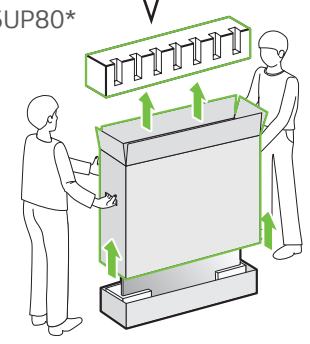

2

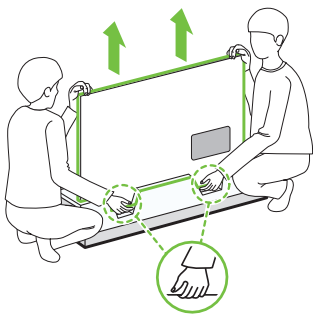

3

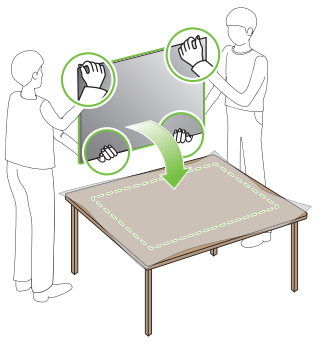

1

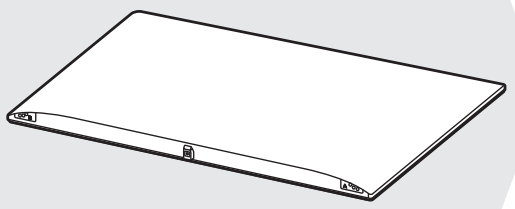

2

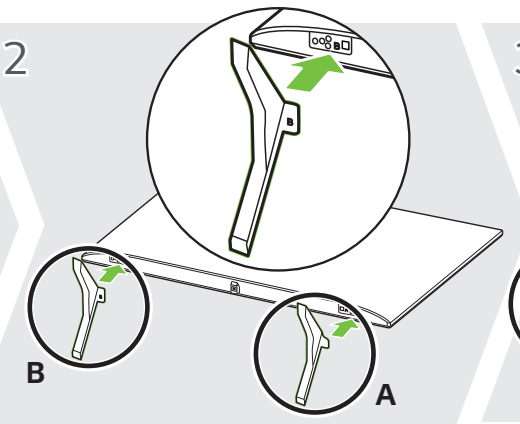

3

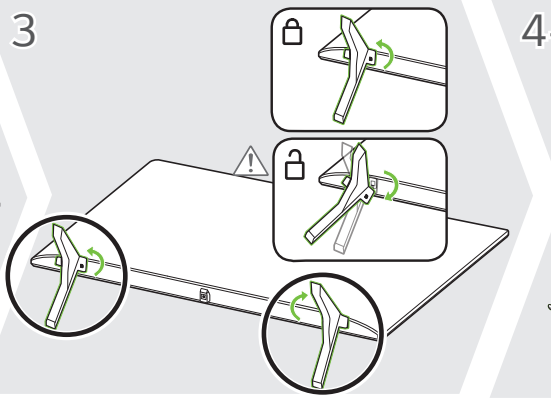

4-A 50/55UP80*

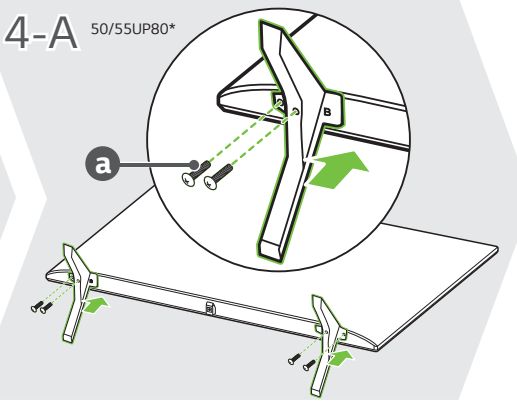

4-B 60/65UP80*

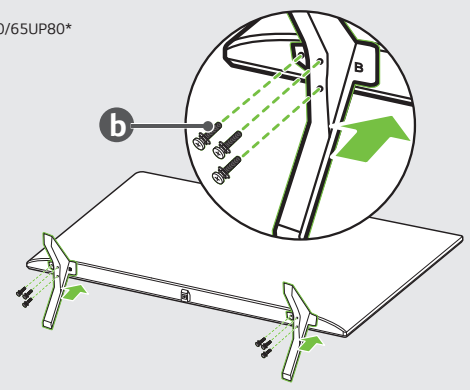

5

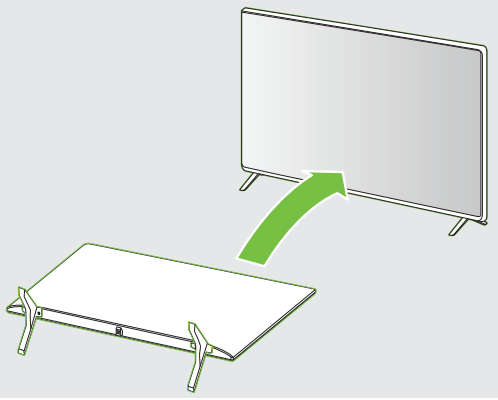

6

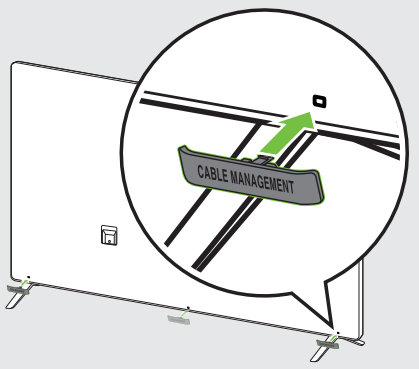

7

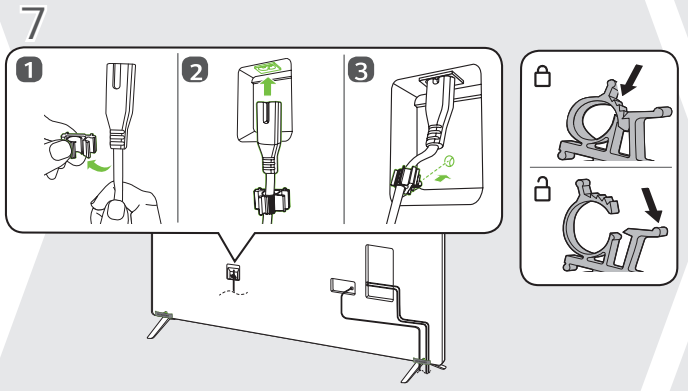

8

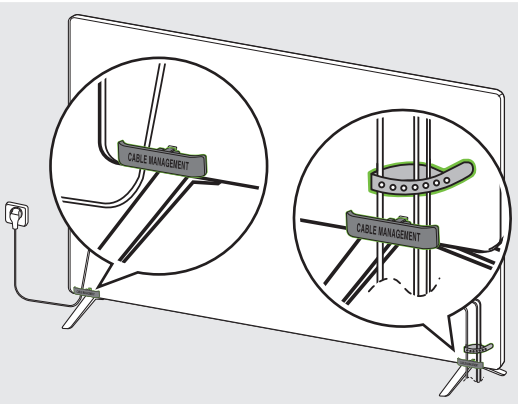

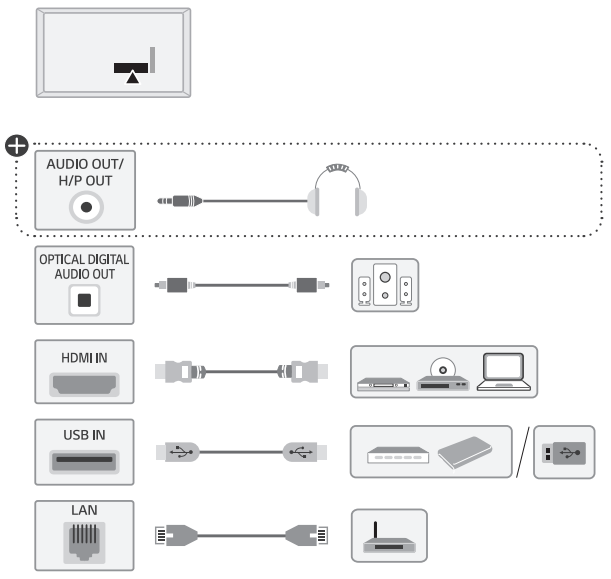

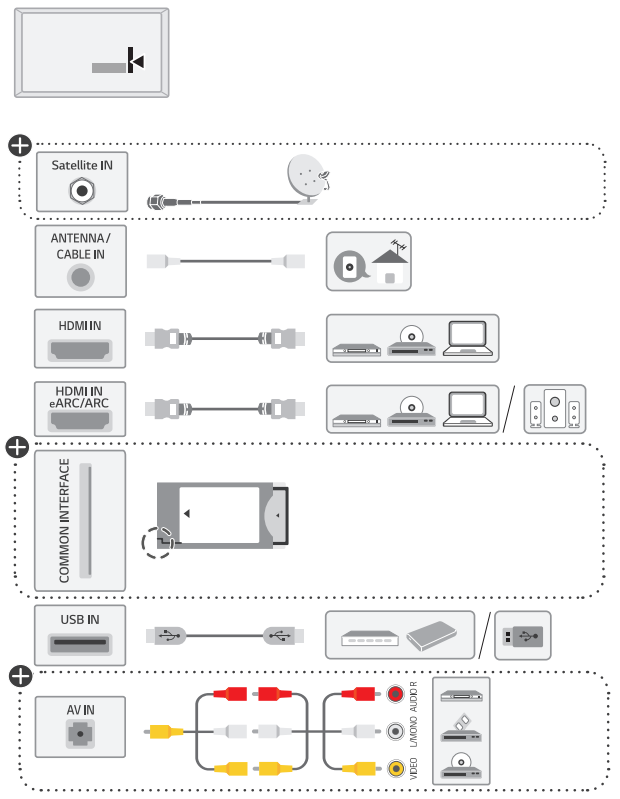

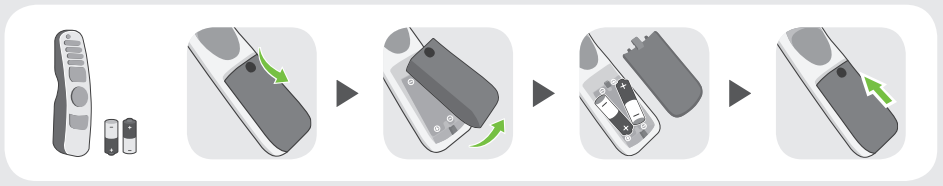



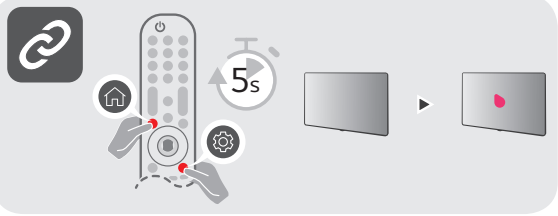



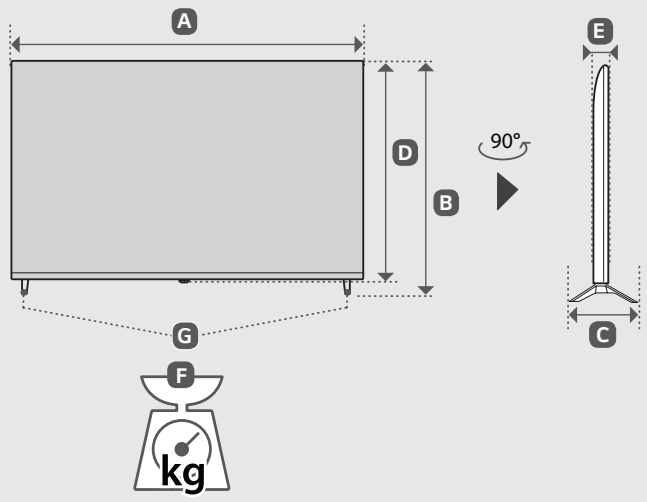

	A	B	C	D	E	F	F - G
	(mm)					(kg)	
50UP8000PTB	1121	708	232	651	57.1	11.9	11.7
55UP8000PTB 55UP8000PTZ	1235	772	232	715	57.5	14.2	14.0
60UP8000PTA 60UP8000PTB 60UP8000PTZ	1356	845	271	783	57.5	17.4	17.1
65UP8000PTB 65UP8000PTZ	1454	899	271	838	57.7	21.8	21.5
Power requirement / Kebutuhan daya				AC 100-240 V ~ 50 / 60 Hz			

English
- Read **Safety and Reference.**
- The Analog Gender adapter can be purchased separately at Customer Service.

Indonesia
- Baca **Referensi dan Manual.**
- Adaptor Analog Gender dapat dibeli terpisah di Layanan Pelanggan.

⊕ : Depending on model / Tergantung pada model