Scan the QR code to see the manual.

OWNER'S MANUAL

DISHWASHER

Before beginning installation, read these instructions carefully. This will simplify installation and ensure that the product is installed correctly and safely. Leave these instructions near the product after installation for future reference.

ENGLISH

DB475***

MFL71916190
Rev.01_012425

www.lg.com

Copyright © 2023-2025 LG Electronics. All Rights Reserved

TABLE OF CONTENTS

This manual may contain images or content that may be different from the model you purchased.

This manual is subject to revision by the manufacturer.

SAFETY INSTRUCTIONS

READ ALL INSTRUCTIONS BEFORE USE 4
WARNING 4
CAUTION 9
CARING FOR THE ENVIRONMENT 11

INSTALLATION

Parts and Specifications 12
Preparing Cabinet Opening 14
Levelling the Appliance 17
Securing Door Panel to Dishwasher 19
Securing Dishwasher to Cabinet Opening 22
Installing the Drain Hose 23
Preparing Water and Electrical Connections 24
Final Installation Check 25

OPERATION

Operation Overview 26
Before Using 27
Control Panel 31
Wash Cycles 32
Options and Extra Functions 33
Programme Table 36
Information for Energy Test (EN60436) 40
Loading the Dishwasher 41
Adding Cleaning Agents 46
Refilling 47
Useful Tips 48

SMART FUNCTIONS

LG ThinQ Application 49
Smart Diagnosis 51

MAINTENANCE

Cleaning and Caring 53

TROUBLESHOOTING

Before Calling for Service.....58

SAFETY INSTRUCTIONS

READ ALL INSTRUCTIONS BEFORE USE

The following safety guidelines are intended to prevent unforeseen risks or damage from unsafe or incorrect operation of the appliance.

The guidelines are separated into ‘WARNING’ and ‘CAUTION’ as described below.

Safety Messages

⚠ This symbol is displayed to indicate matters and operations that can cause risk.

Read the part with this symbol carefully and follow the instructions in order to avoid risk.

⚠ **WARNING**

This indicates that the failure to follow the instructions can cause serious injury or death.

⚠ **CAUTION**

This indicates that the failure to follow the instructions can cause minor injury or damage to the product.

WARNING

⚠ **WARNING**

- To reduce the risk of explosion, fire, death, electric shock, injury or scalding to persons when using this product, follow basic precautions, including the following:

Technical Safety

- This appliance is not intended for use by persons (including children) with reduced physical, sensory or mental capabilities, or lack of experience and knowledge, unless they have been given supervision

or instruction concerning use of the appliance by a person responsible for their safety. Children should be supervised to ensure that they do not play with the appliance.

- Observe the information given in Specifications regarding the maximum number of place settings to be washed of the dishwasher.
- The water pressure must be between 0,05 MPa and 1,0 MPa.

Installation

- Never attempt to operate the appliance if it is damaged, malfunctioning, partially disassembled, or has missing or broken parts, including a damaged cord or plug.
- If the power cord is damaged or the hole of the socket outlet is loose, do not use the power cord and contact an authorized service centre.
- Do not modify the power cord provided with the appliance. Please contact the LG Customer information centre to advise of its incompatibility.
- This appliance should only be transported by two or more people holding the appliance securely.
- Do not install the appliance in a damp and dusty place. Do not install or store the appliance in any outdoor area, or any area that is subject to weathering conditions such as direct sunlight, wind, or rain or temperatures below freezing.
- Do not plug multiple socket outlets, an extension power cable or adapter with this appliance.
- Disconnect the power cord, house fuse or circuit breaker before installing or servicing the appliance.
- When moving or installing the product in a different location, call qualified service personnel for installation and service.
- Fix the drain hose securely in place.
- This appliance is not designed for maritime use or for mobile installations such as in RVs, trailers, or aircraft.
- This appliance must be positioned near to an electrical power supply.

- When installing or moving the appliance, be careful not to pinch, crush, or damage the power cord.
- Use new hose or hose-set supplied with the appliance. Reusing old hoses can cause a water leak and subsequent property damage.
- Improper connection of the equipment-grounding conductor can result in risk of electric shock. Check with a qualified electrician or service personnel if you are in doubt as to whether the appliance is properly grounded.
- This appliance must be grounded. In the event of malfunction or breakdown, grounding will reduce the risk of electric shock by providing a path of least resistance for electric current.
- This appliance is equipped with a power cord having an equipment-grounding conductor and a grounding power plug. The power plug must be plugged into an appropriate socket outlet that is installed and grounded in accordance with all local codes and ordinances.
- After installing, check the hose connection for leaks before moving the appliance into the cabinet opening.
- Do not damage or place heavy items on the power cord of the appliance.
- This appliance is intended to be used in household and domestic applications only and must not be used for commercial purposes.
- For a permanently connected dishwasher: This appliance must be connected to a grounded metal, permanent wiring system, or an equipment-grounding conductor must be run with the circuit conductors and connected to the equipment-grounding terminal or lead to the appliance.
- Connect the ground wire to the green ground connector in the terminal box.

Operation

- Immediately unplug the power plug and contact an LG Electronics customer information centre if you detect a strange sound, odour, or smoke coming from the appliance.

- Do not repair or replace any part of the appliance. All repairs and servicing must be performed by qualified service personnel unless specifically recommended in this Owner's Manual. Use only authorized factory parts.
- Do not leave the appliance door open. Children may hang on the door or crawl inside the appliance, causing damage or injury.
- Do not use flammable gas and combustible substances (benzene, gasoline, thinner, petroleum, alcohol, etc.) near the appliance.
- Do not attempt to separate any panels or disassemble the appliance. Do not apply any sharp objects to the control panel in order to operate the appliance.
- Do not bend the power cable excessively or place a heavy object on it.
- Do not put animals, such as pets into the appliance.
- Do not touch the power plug or the appliance controls with wet hands.
- If there is a gas leakage (isobutane, propane, natural gas, etc.), do not touch the appliance or power plug and ventilate the area immediately.
- In case of flood, disconnect the power plug and contact the LG Electronics Customer Information Centre.
- Under certain conditions, hydrogen gas may be produced in a hot-water system that has not been used for two weeks or more. HYDROGEN GAS IS EXPLOSIVE. If the hot-water system has not been used for such a period, before using the appliance turn on all hot water tap and let the water flow from each for several minutes. This will release any accumulated hydrogen gas. As the gas is flammable, do not smoke or use an open flame during this time.
- Keep the area underneath and around your appliances free of combustible materials such as lint, paper, rags, chemicals, etc.
- Some dishwasher detergents are strongly alkaline. They can be extremely dangerous if swallowed. Avoid contact with the skin and eyes and keep children away from the dishwasher when the door is open. Check that the detergent receptacle is empty after completion of the wash cycle.

- Do not operate the appliance unless all enclosure panels are properly in place.
- Use only detergents or wetting agents recommended for use in a appliance and keep them out of the reach of children.
- Do not wash and dry articles that have been soaked in explosive substances such as gasoline, solvents, solvent-based detergent.
- When loading items to be washed:
  - Locate sharp items so that they are not likely to damage the door seal.
  - Load sharp knives with the handles up to reduce the risk of cut-type injuries.
- Do not wash plastic items unless they are marked “dishwasher safe” or the equivalent. For plastic items not so marked, check the manufacturer’s recommendations.
- Do not touch any heating element (where it is exposed) during or immediately after use.
- Do not abuse, sit on, or stand on the door or dish rack of the dishwasher.
- After cleaning the dishes, turn off the tap. Turn on the tap again and check the connection status of water supply hose before cleaning.
- Do not open the door while the appliance is in operation. Water will splash out and could cause a slipping hazard.
- Be careful not to catch your hand when closing the door of the appliance.
- Do not come into contact with any fitted steam outlet.
- Small parts, such as rack clips and filter retaining posts can be a choke hazard to small children if removed from the dishwasher. Keep out of reach of small children.
- Knives and other utensils with sharp points must be loaded in the basket with their points down or placed in a horizontal position.
- The door should not be left in the open position since this could present a tripping hazard.

- Do not touch the heat dry blower. During operation, after cycles complete and for periods after operation the heat dry blower can remain extremely hot so you should not touch the area. (Only for models with a heat dry blower.)

Maintenance

- Never unplug the appliance by pulling on the power cable. Always grip the power plug firmly and pull straight out from the socket outlet.
- Securely plug the power plug in the socket outlet after completely removing any moisture and dust.
- Do not spray water inside or outside the appliance to clean it.
- Disconnect the appliance from the power supply before cleaning the appliance. Setting the controls to the OFF or stand by position does not disconnect this appliance from the power supply.

Disposal

- Before discarding an old appliance, unplug it. Cut off the cable directly behind the appliance to prevent misuse.
- Dispose of all packaging materials (such as plastic bags and styrofoam) away from children. The packaging materials can cause suffocation.
- Remove the door before disposing of or discarding this appliance to avoid the danger of children or small animals getting trapped inside.

CAUTION

⚠ CAUTION

- To reduce the risk of fire, electric shock, or injury to persons when using your product, basic safety precautions should be followed, including the following:

Installation

- Install the product on a firm and level floor.
- Do not put the drain hose under the dishwasher during installation.

Operation

- Turn off the water tap and unplug the appliance if the appliance is to be left for an extended period of time, such as during vacations.
- Do not place objects on the top of the appliance.
- Do not wipe or coat the surface of the product with liquid detergent or bleach (chlorine bleach, oxygen bleach, etc). Failure to follow these instructions may result in corrosion or discoloration of the coating.
- Do not touch water draining from the machine as it may be hot.
- If the drain hose and the water supply hose are frozen in winter, defrost before using.
- Do not put hands, feet, or metal objects below or behind the appliance.
- Do not wash dishes stained with chemical products such as oil, cream or lotions used in a massage parlor, skin care shop, beauty shop or barber shop.

Maintenance

- If cooking oil is spilled on the exterior of the product, wipe it off immediately. Do not clean the exterior of the product with cleaners which contain alcohol, thinners, bleach, benzene, flammable liquids, or abrasives. These substances may discolor or damage the appliance.

CARING FOR THE ENVIRONMENT

Disposal of Your Old Appliance

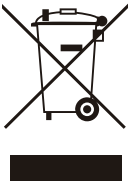

- This crossed-out wheeled bin symbol indicates that waste electrical and electronic products (WEEE) should be disposed of separately from the municipal waste stream.
- Old electrical products can contain hazardous substances so correct disposal of your old appliance will help prevent potential negative consequences for the environment and human health. Your old appliance may contain reusable parts that could be used to repair other products, and other valuable materials that can be recycled to conserve limited resources.
- You can take your appliance either to the shop where you purchased the product, or contact your local government waste office for details of your nearest authorised WEEE collection point. For the most up to date information for your country, please see www.lg.com/global/recycling.

INSTALLATION

Parts and Specifications

NOTE

- Appearance and specifications may change without notice to improve the quality of the appliance.

Front View

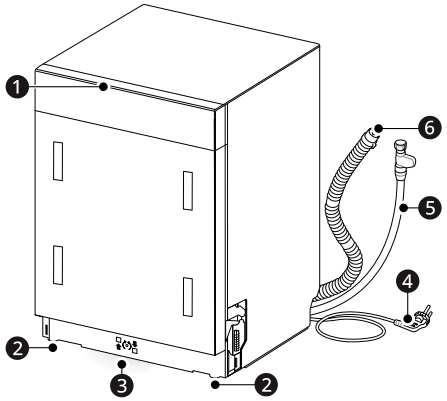

❶ Control Panel

❷ Levelling Feet

❸ Status Indicator Light

❹ Power Cord

❺ Water Supply Hose

❻ Drain Hose

Interior View

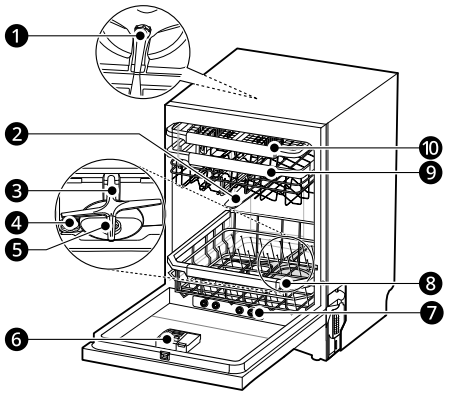

❶ Top Wash Impeller

❷ Upper Spray Arm

❸ Lower Spray Arm

❹ Salt Dispenser Cap

❺ Filtration System

❻ Detergent and Rinse Aid Dispenser

❼ Steam Nozzle

❽ Lower Rack

❾ Upper Rack

❿ Cutlery Rack

Accessories

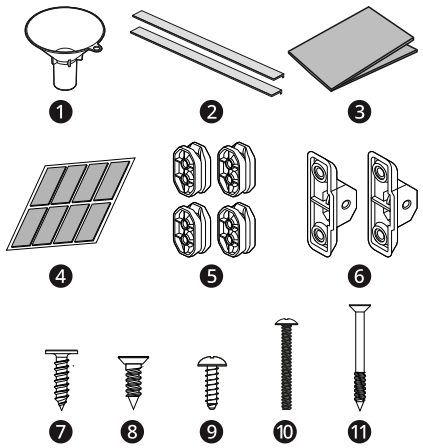

❶ Funnel

❷ Noise Strip (Side)

❸ Moisture Barrier Tape (Aluminum tape)

❹ Fleece Tapes: 8 EA

❺ Panel Brackets (Upper & Middle)

❻ Panel Brackets (Lower)

❼ Wood Screws (Φ 4 x 16 mm): 2 EA

❽ Bracket Screws (Φ 4 x 14 mm): 12 EA

❾ Wood Screws (Φ 4 x 14 mm): 2 EA

❿ Door Adjustment Screws (Φ 4 x 34 mm): 2 EA

⓫ Wood Screws (Φ 4 x 40 mm): 2 EA

Specifications

Model	DB475***
Power Supply	220 - 240 V~, 50 Hz
Dimension (Width X Height X Depth)	598 mm X 815 mm X 554 mm
Product Weight	Approx. 45 kg
Max. Capacity	14 Place Settings
Permissible Inlet Water Pressure	0,05 - 1,0 MPa
Power Consumption	1600 - 1800 W

Information on LED Lighting

This product contains the light source of energy efficiency class G.

- The LED lighting automatically turns on and off.
- The LED lighting is not dimmable.
- The LED lighting does not contain mercury.
- Please see www.lg.com/global/recycling.

If the LED lighting is not working
Please contact the LG Electronics customer information centre. Do not attempt removal of the LED lighting.

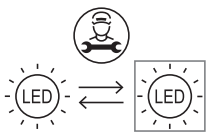

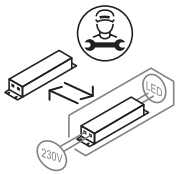

Preparing Cabinet Opening

Choosing the Proper Location

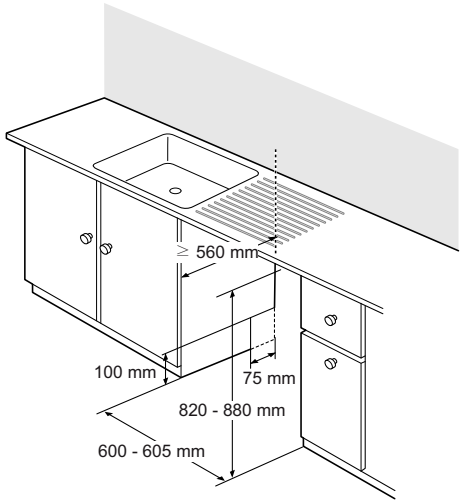

- Cut out for hoses and electrical cables on either side. (Approximately 100 mm X 75 mm)
- Select a location as close to the sink as possible for ease of connection to the water and drain pipes. To ensure drainage, the appliance should not be installed more than 1 metre away from the sink.
- If the appliance is installed in a corner, allow minimum clearance of at least 50 mm between the appliance and an adjacent cabinet or wall.
- Before sliding the appliance into the installation opening, all necessary height adjustments should be made using a spanner.

⚠ CAUTION

- Any bare wood surrounding the appliance should be sealed with a waterproof paint or sealant to prevent it from swelling.
- Install the appliance on a flat and stable area. Do not place any objects in-between the floor and base or leg off the appliance.

NOTE

- This installation must be conducted by qualified service personnel to ensure it has been installed correctly.
- Do not pull or lift the appliance using the handle; doing so can damage the door and hinges. Open the door and grab the body frame and the top front opening of the tub to move or lift the appliance.

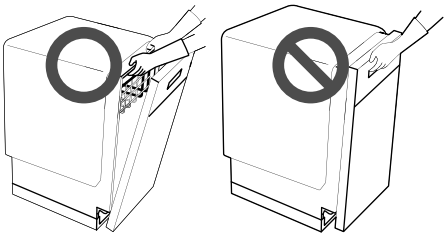

- Do not push the door of the dishwasher with knees.

Checking the Door Panel

This dishwasher has different installation types depending on the door panel (not provided). Before installing the dishwasher, check the weight and dimensions of the door panel you have selected.

The owner's manual and installation sheet are divided into **(Case A) Mounting the sliding panel** and **(Case B) Mounting the fixed panel**, so follow the instructions for each case.

- **(Case A) Mounting the sliding panel** (which means front panel slides up as the door is opened.)
  - Height: **720** - **780** mm

- Weight : **2,5** - **11** kg

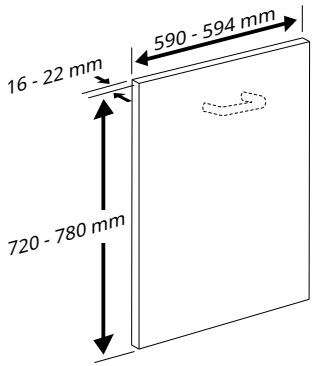

- **(Case B) Mounting the fixed panel**
  - Height: **650** - **720** mm
  - Weight : **3,5** - **9** kg

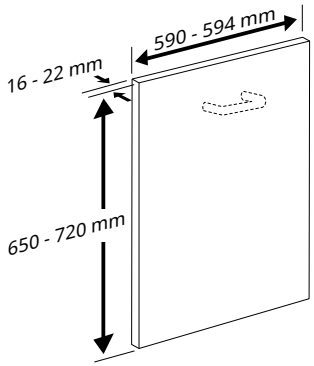

- If the door panel weighs **between 8 kg and 11 kg**, adjust the door spring tension to make the door easier to open. See the **Регулировка натяжения пружины двери (Adjusting Door Spring Tension)** section.

NOTE

- You can adjust the width dimensions of the wood panel to match the cabinet width.

Attaching the Strip to the Appliance Side Cabinet

To reduce noise attach the strip to the appliance sides, if the opening space allows.

1 Remove the double-side tape from the side strips.

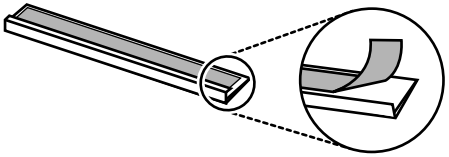

2 Attach the side strip to the front of the side cabinet and then push down the side strip so that the side strip adheres well to the cabinet.

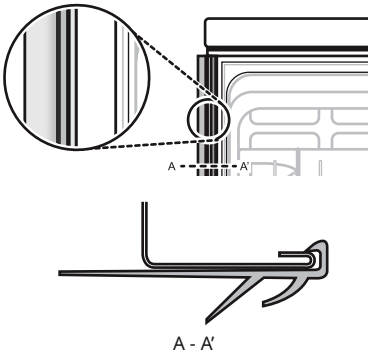

3 Repeat the above steps for attaching the opposite side strip to the opposite side cabinet.

Installing Moisture Barrier Tape

When the appliance is installed without the top cover, the counter top underside may be damaged by steam or condensation when the door is opened.

Install the moisture barrier tape to the underside of counter top to protect the counter top from condensation when the appliance opened.

NOTE

- Moisture barrier tape is included in the manual assembly bag.
- If the counter top is made of granite or waterproof materials, the moisture barrier tape is not required.
- Condensation may occur on the underside or along the front edge of the counter top when the room temperature is low.

1 Clean and dry the underside of the counter top on which the tape will be attached.

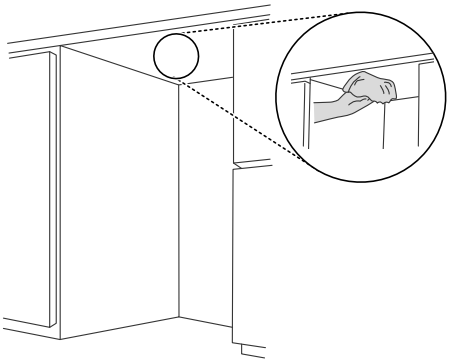

2 Remove the protective film from the tape.

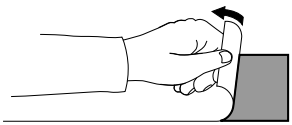

3 Install the tape to the underside of the counter top.

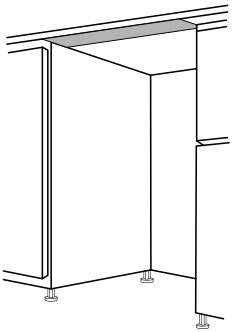

Installing Fleece Tape

(Case A) Mounting the sliding panel

Attaching fleece tape between the dishwasher door and the door panel will reduce the friction when the door slides up and down.

1 Install the fleece tape close to the bracket openings to make sure the door slides smoothly.

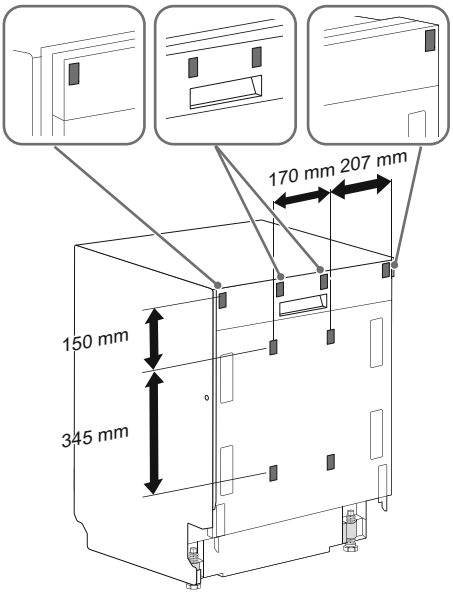

2 Peel the fleece tape strips off the carrier and attach them to the door.

Levelling the Appliance

Removing the Sliding Links

(Case B) Mounting the fixed panel

In order to assemble as mounting the fixed panel, the sliding links must be disassembled. Remove the sliding links by loosening the 2 screws on each left and right.

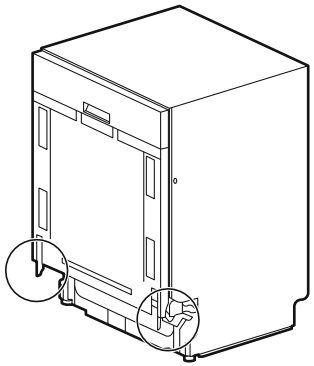

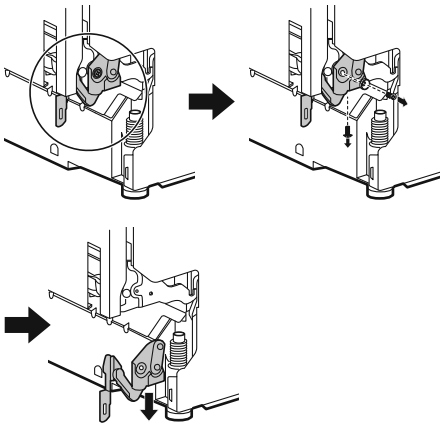

⚠ CAUTION

- When disassembling the link assembly, be sure to wear gloves as there is a risk of injury.
- When reassembling the link assembly, door malfunction may occur, call qualified service personnel for installation and service.

Checking the Level

Levelling the appliance prevents unnecessary leakage and poor washing. Check whether the appliance is perfectly level after installation.

- If the appliance rocks when pushing the top plate of the appliance diagonally, adjust the feet again.

NOTE

- When the appliance is correctly leveled, there should be no slant, stickiness or rubbing sound when the door is opened.

Adjusting and Leveling the Appliance

When the appliance is not perfectly level, turn the adjustable feet until the appliance no longer wobbles.

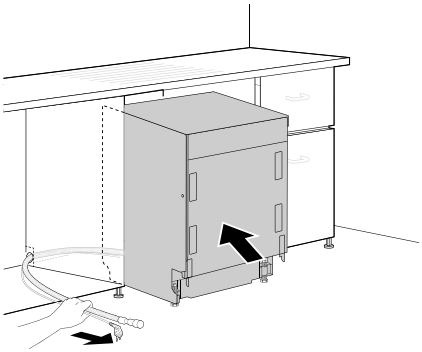

Slide the dishwasher into the cabinet, opening carefully.

⚠ CAUTION

- Make sure that the drain hose behind the machine and inside the cabinet is not kinked or stretched.

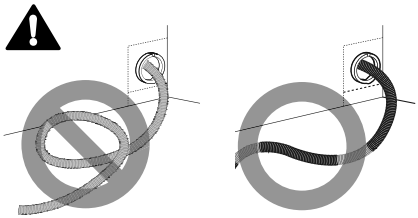

Adjusting Front Levelling Feet

- Use a flat-blade screwdriver to turn the front levelling feet and adjust the front of the tub.
- Turn the front levelling feet clockwise to raise the front of the tub up to 60 mm ❶ and counterclockwise to lower it up to 60 mm ❶.

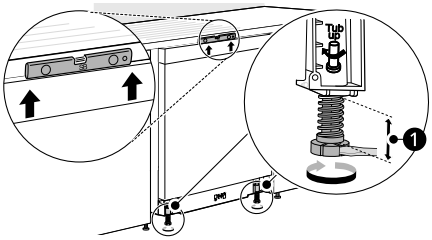

- The adjustments work identically for both front levelling feet.

Adjusting Back Levelling Feet

- Use a phillips screwdriver to adjust the rear levelling foot and the rear of the tub using the centre screw at the base of the appliance in the front.
- Turn the centre screw clockwise to raise the rear of the tub and counterclockwise to lower it.

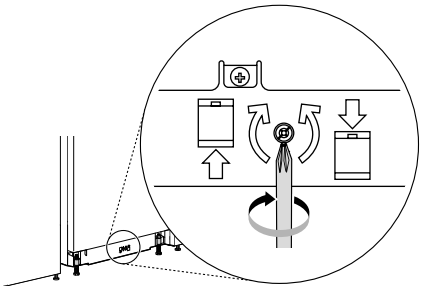

NOTE

- To avoid damaging the screw, do not use an electric screwdriver.
- Use a spirit level to check the correct alignment in all directions.

Case 1. The Door is Slanted to the Right

1 Unscrew (counter-clockwise) the front left leg and correct the level.

2 Check the opening of door and repeat if necessary until the door opens and closes properly.

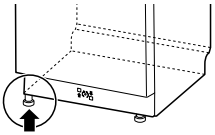

Case 2. The Door is Slanted to the Left

1 Unscrew (counter-clockwise) the front right leg and correct the level.

2 Check the opening of door and repeat if necessary until the door opens and closes properly.

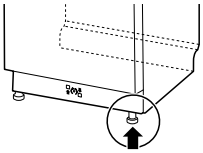

Securing Door Panel to Dishwasher

Adjusting Appliance Height

1 Adjust the height of the appliance so the top of the door is as close to the height of the surrounding cabinet doors or drawer fronts as possible.

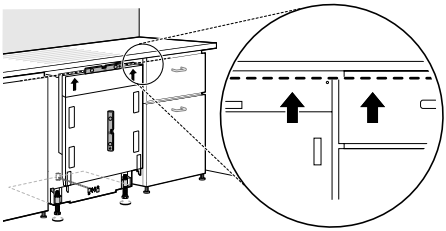

2 Measure the difference in height (X mm) between the top of the dishwasher door and the tops of the surrounding cabinet doors or drawers.

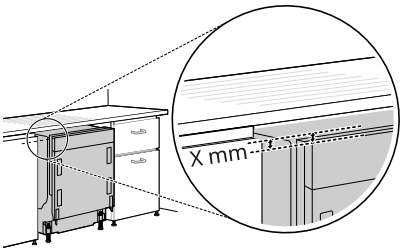

3 Using the measurement from step 2, make a mark (X mm) up from the bottom of both rulers at the top of the provided installation template.

Draw a line between the marks and trim off the top of the template at the line.

Cut out the squares marked on the midline of the template so that you can see the centre line.

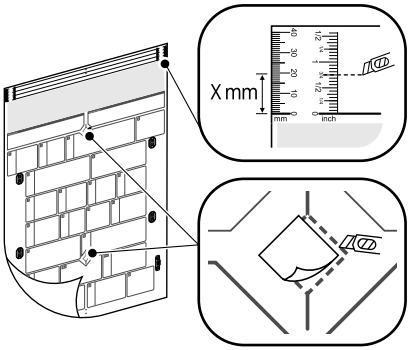

Adjusting Door Spring Tension

If the door panel weighs **between 8 kg and 11 kg**, adjust the door spring tension to make the door easier to open.

1 Open the dishwasher door to about 30 °.

- Do not adjust the spring strength with the dishwasher door fully open.

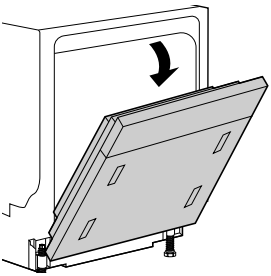

2 Use the door adjustment screws (Φ 4 x 34 mm) provided to adjust the door spring tension at the bottom of the dishwasher.

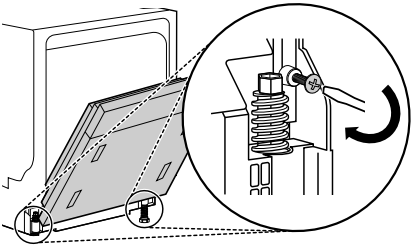

⚠ CAUTION

- Tighten the door adjustment screws completely.

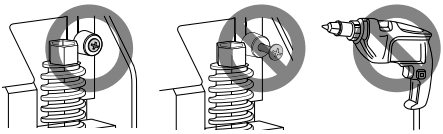

- Adjust the spring strength properly. If you do not adjust the spring strength, the door may fall open or spring closed unexpectedly. Tightening harder than 15 kgf·cm (15 Nm) may result in a crack in the screw boss.

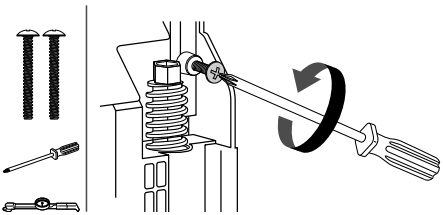

Preparing Door Panel

1 Mark a centre line lengthwise down the back of the door panel.

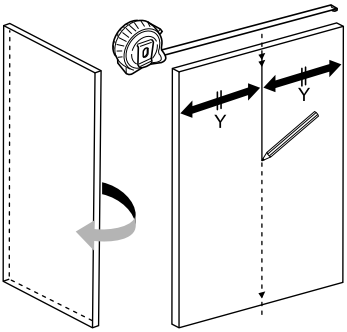

2 Align the top and centre line on the installation template with the top and centre line of the door panel. Securely tape the installation template to the back of the door panel.

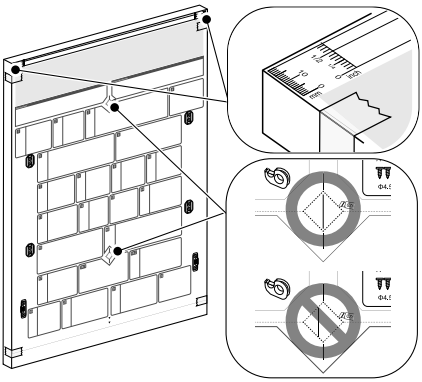

3 **(Case A) Mounting the sliding panel**

Use a 2 mm diameter drill bit to drill 10 mm deep pilot holes at the 12 points marked on the template.

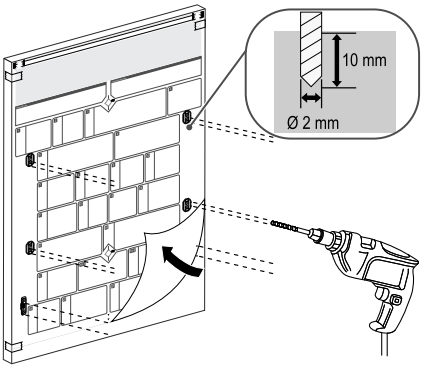

(Case B) Mounting the fixed panel

Use a 2 mm diameter drill bit to drill 10 mm deep pilot holes at the 10 points marked on the template.

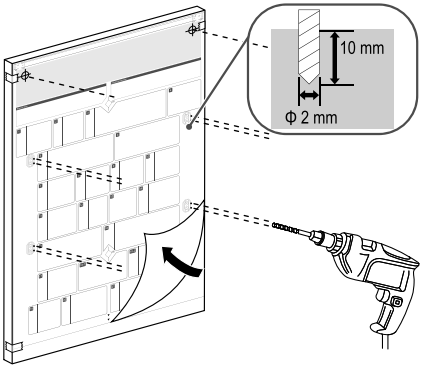

4 Remove the template, and attach the upper and middle panel brackets (provided) to the door panel using the provided bracket screws (Φ 4 x 14 mm).

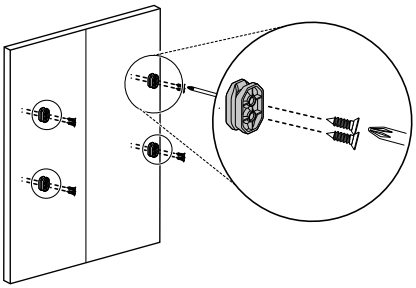

(Case A) Mounting the sliding panel

Attach the lower panel brackets (provided) to the door panel using the provided bracket screws (Φ 4 x 14 mm).

- Position the lower panel brackets with the flat side facing out.

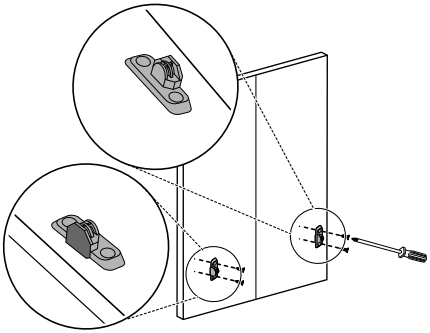

5 Attach a handle to the front of the door panel before mounting the panel on the dishwasher. Make sure to countersink the screws so the panel slides smoothly.

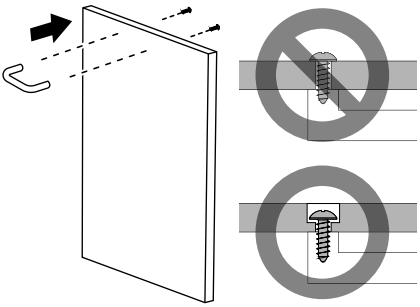

Mounting Door Panel

1 Mount the door panel on the dishwasher door by inserting the brackets on the panel into the bracket openings in the door. Leave a 180 mm gap to tighten the screws in step 2.

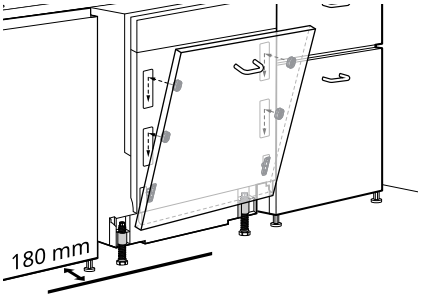

2 **(Case A) Mounting the sliding panel**

Attach the door panel to the dishwasher door on the sides using the provided wood screws (Φ 4 x 14 mm).

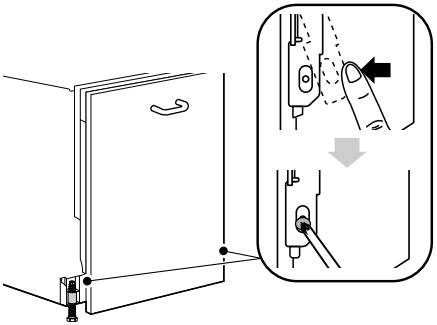

(Case B) Mounting the fixed panel

Remove the 2 screws from the control panel. Attach the door panel to the dishwasher door using the provided wood screws (Φ 4 x 40 mm).

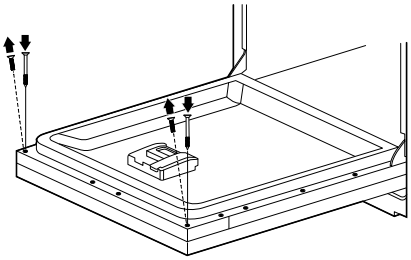

Securing Dishwasher to Cabinet Opening

Securing Dishwasher to Cabinet Framework

1 Remove the 2 plastic caps from the mounting bracket access holes.

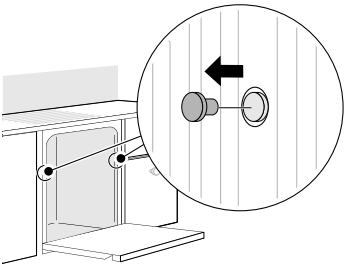

2 Drive a wood screw (Φ 4 x 16 mm) through the mounting bracket and into the cabinet frame.

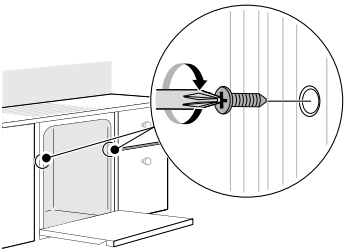

3 Reinstall the plastic caps.

NOTE

- External water leakage could result if the installation of the screws to the surrounding timber cabinet is not done correctly.
- Please ensure that the height levelling of the dishwasher is done by adjusting the feet before installing the side cabinet securing screws.

Attaching a Custom Kick Plate

Attach a custom kick plate. If needed, use a saw to cut a notch in the top of the custom kick plate to provide clearance for the door panel when opening the door.

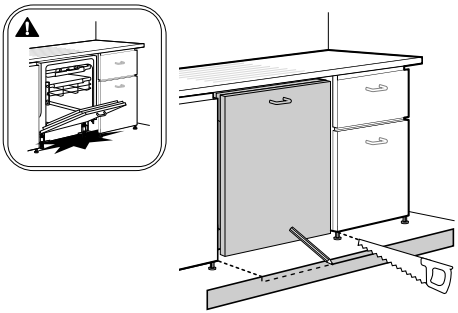

Installing the Drain Hose

If the end of the drain hose does not fit to the drain line, use a drain extension kit (optional) that is resistant to heat and detergent.

- This should be available from a plumbing shop or a hardware store.

Connection to the Waste Spigot

Check the waste spigot when initially installing. An OE error can occur when the waste spigot below the sink is not drilled out properly. To connect the drain hose, carefully drill out at least a 15 mm diameter hole in the waste spigot before connecting and securing.

⚠ CAUTION

- Make sure that plastic debris is not remaining inside of spigot after it has been drilled out.
- Do not attempt to open the waste hole with a screwdriver and hammer. This will induce debris to become stuck and cause a malfunction.
- Caution should be taken when passing hoses through Cabinetry holes as they may have sharp edges and could damage the hoses. Smooth or sand edges to avoid damaging the drain or inlet hoses before installing them.

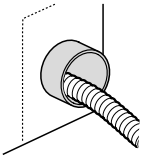

- Make sure that the line is not kinked or sharply bent. Bending or kinking hoses during installation can cause a drain malfunction.

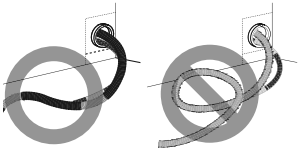

- Make sure the drain hose is straight before feeding the end of it through the hole for the water supply.

To prevent siphoning, one of the following methods must be used.

Method 1

When the drain hose is connected to a waste spigot, the hose must be looped up to the underside of the bench top and secured.

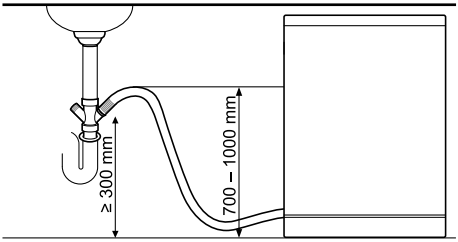

Method 2

When the drain hose is connected to a separate standpipe ❶, it is essential that an airtight connection ❷ be made. If not, it can induce odours.

- Standpipe diameter is at least 40 mm.

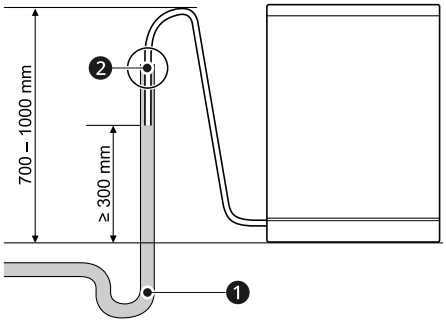

Preparing Water and Electrical Connections

Connecting the Hose to the Water Tap

Connect the water supply hose ❶ to the water tap.

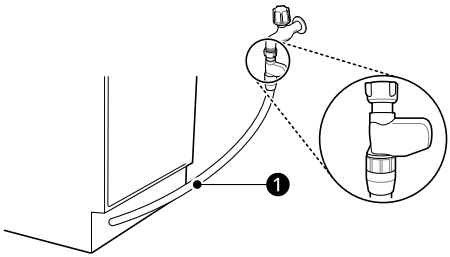

⚠ WARNING

- Do not shorten or damage the water supply hose as it contains electrical wires and components. It can not be detached or removed from the appliance for installation purposes.
- It is important that the water supply hose not be tampered with, cut, disassembled, pulled, or kinked. It contains electrical wiring inside and if damaged, can cause an electrical hazard.

⚠ CAUTION

- Only use the threaded nut of the water supply hose to tighten it to the tap.
- Do not twist or kink the water supply hose when connecting it to the tap.

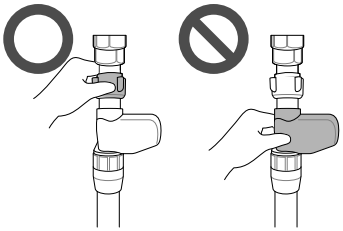

- This appliance may be fed with either hot or cold water. If the water connection can not be maintained below 65°C, the appliance must be connected to cold water.
- Use sealant tape or sealing compound on the tap's thread to avoid water leaks.
- Make sure that the line is not kinked or sharply bent.

NOTE

- Before connecting the water supply hose to the tap, turn on the tap to flush out foreign substances (dirt, sand or sawdust) in the water lines. Let water drain into a bucket.
- It takes about 3 – 4 minutes for the first supply water.

Routing Electrical Wiring

Connect the appliance to an earthed socket in accordance with the current wiring regulations, protected by a minimum 15 amp circuit breaker or time delay fuse.

Wiring must be two wires with earth.

The power cord should not be positioned behind the appliance but within 1,2 metres of the side so that the plug is easily accessible.

⚠ WARNING

- For personal safety, remove house fuse or open circuit breaker or switch off power plug before installation.
- Do not use an extension cord or double adapter.
- The plug must be plugged into an appropriate outlet that is properly installed and grounded in accordance with all local codes and ordinances.
- Repairs to the appliance must only be carried out by qualified service personnel. Repairs carried out by inexperienced persons may cause injury or serious malfunctioning. Contact our local service centre.
- Connect to a properly rated, protected, and sized power circuit to avoid electrical overload.

Final Installation Check

Testing the Dishwasher

1 Turn on electrical power.

2 Turn on house water supply.

3 The door should open and close smoothly and without harsh noises, if the unit has been levelled correctly.

4 Run the appliance on a **Полоскание (Rinse)** cycle to verify proper operation and check for leaks.

Installation Check Error Codes

Error Code	Possible Cause and Solution
OE	**Drain hose kinked or pinched.** • Feed the drainage and supply hoses through the hole under the sink. Then gradually slide the dishwasher into the cabinet while pulling on the hoses under the sink to take up any slack. This helps avoid kinking the hoses or trapping them beneath the dishwasher.
	Waste spigot under sink is clogged. • Drill out the waste spigot under the sink.
IE	**Water supply line kinked under dishwasher.** • Feed the drainage and supply hoses through the hole under the sink. Then gradually slide the dishwasher into the cabinet while pulling on the hoses under the sink to take up any slack. This helps avoid kinking the hoses or trapping them beneath the dishwasher.
	House water supply not turned on. • Turn water on. Water pressure may be too high or too low.

OPERATION

Operation Overview

Using the Appliance

1 Open the door and press the Power button.

- The unit will turn on. Check the indicators.

2 Check that there is rinse aid and dishwasher salt present.

- Refill the rinse aid and the salt, if the corresponding icons illuminate. For more information, refer to **Refilling** section.
- : Salt Refill Icon
- : Rinse Aid Refill Icon

3 Check the filters.

- Always clean the filter either after a wash or before a wash so that it does not impair the washing results.

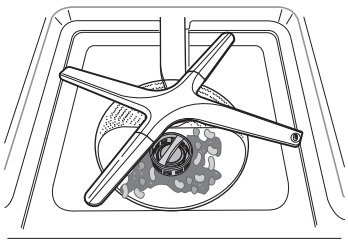

4 Ensure the spray arms can unobstructedly rotate.

- Ensure that the upper spray arms and the lower spray arms rotate well. Remove the spray arm and clean it if it does not rotate.

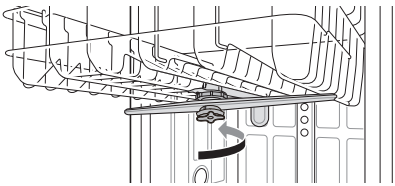

5 Load the dishes in the rack.

- Make certain that no dishes or utensils are in the path of the spray arms.
- Do not place one dish on top of another.

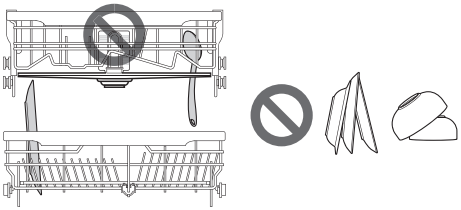

6 Add the proper amount of detergent powder to the dispenser.

- If using Tablets, they can simply be placed directly on the base of the tub, or on the lower part of the inner door.

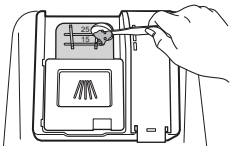

7 Set and start the programme.

- The programme will start automatically in 4 seconds after any setting is selected.

⚠ WARNING

- Do not load any items in upper rack when the lower rack is pulled out and loaded. Failure to do so may result in injury as the appliance could become unbalanced and topple over.
- Push the upper rack in all the way.
- Empty the lower rack first and then the upper one. It will avoid water dripping from the upper rack onto the dishes below.
- Do not open the door during operation or right after it has completed the wash cycle as the steam may cause scalding as the door is opened.

NOTE

- Never use liquid dishwashing detergent in the appliance.
- It is not recommended to rinse the dishes manually before operating the dishwasher because it increases water and energy consumption.
- Washing tableware in a household dishwasher usually consumes less energy and water in the use phase than hand dishwashing when the household dishwasher is used according to the manufacturer's instructions.
- Loading the household dishwasher up to the capacity indicated by the manufacturer will contribute to energy and water savings.

Before Using

This model has a water softener to soften hard water.

NOTE

- The appliance can be used without dishwasher salt if not required, however, the hardness level needs to be set to H0 so that the icon does not remain lit.
- In order to provide satisfactory rinsing results, the appliance requires soft water, i.e., containing little or no lime, otherwise water stains will be left behind on the dishes and inside the appliance.
- If the tap water exceeds a certain level of hardness, it must be softened, i.e., decalcified. This is achieved by adding dishwasher salt to the water softener inside the appliance. The required amount of the salt is set up according to how hard tap water is.

Checking Water Hardness Level

Method 1

1 Check the water hardness in your area. The water utility company can help you with this.

2 Set the softening system level of the appliance according to the water hardness level.

Method 2

You can check water hardness by using the test strip included in the product.

1 Immerse all reaction zones of the test strip for about a second. Do not in running water.

2 Shake off excess liquid from the strip and wait for 1 minute.

3 Check the water hardness colour from the strip. Refer to the wrapper.

Water Hardness Table

Water Hardness							Softening level	Ratio*1
ppm	°d	°e	°f	mmol/l (Ca+Mg)	mg/l (Ca)	Range		
0	<4	<5	<7	<0,7	<29	Soft	H0	-
75	4 - 7	5 - 9	7 - 13	0,7 - 1,3	29 - 50		H1	1:24
125	7 - 14	9 - 17,5	13 - 25	1,3 - 2,5	50 - 100		H2	1:7
250	14 - 21	17,5 - 26	25 - 38	2,5 - 3,8	100 - 150		H3	1:4
375	>21	>26	>38	>3,8	>150	Hard	H4	2:1

*1 The number of water softerner regeneration(s)*2: The number of wash cycle(s)*3

*2 A water softner regeneration takes place at the end of a main wash operation according to the **Эко (Eco)** programme.

*3 A wash cycle consists of 4 operations(Pre-wash, Main wash, Rinse, Heating rinse) according to the **Эко (Eco)** programme.

Setting the Water Softening System

For effective washing results, adjust the setting corresponding to the hardness level of water used in water supply. The water softener has 5 adjustment levels, and the appliance is programmed at the factory for a water hardness level of H2. You can check the default setting value and adjust it in the following steps:

1 Press **Power** and **Половинная загрузка (Half Load)** button simultaneously.
- Current setting value indicated.

2 Press the **Отсрочка старта (Delay Start)** button, and then set up the intended value.
- Scope of setting value is H0 to H4.

3 Press the **СТАРТ (START)** button to save the setting.
- The power turns off after saving.

NOTE

- The **Salt Refill** icon turns on in the display if dishwasher salt is not in the softening system.
- If the hardness setting is set to H0, no icon indicates in spite of no salt.

Filling with Dishwasher Salt

The salt dispenser must be filled with salt before starting the washing programme. In case of insufficient salt, the **Salt Refill** icon indicates on the display, unless the hardness level has been set to H0.

⚠ CAUTION

- Once you have filled with dishwasher salt you must run the Rinse cycle immediately to remove the salt and the salt water around the inner tub in order to prevent corrosion.

1 Remove the lower rack and remove the cap of the salt dispenser located on the left side of the filters.

2 Before using the appliance for the first time, it is necessary to pour 1 kg of dishwasher salt and 1 litre of water at the same time if intending to use the water softener system. When refilling the salt, use a funnel. Refer to **Before Using** section.

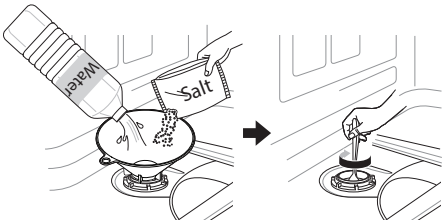

3 Refit the cap tightly.

4 Run the **Полоскание (Rinse)** cycle without dishes.

Salt Refill Cycle (1 kg for each load)

	H1	H2	H3	H4
Cycles	130	50	20	10

- The table describes information of **Авто (Auto)** programme.
- Cycle may vary on the salt refill amount.

⚠ CAUTION

- Do not pour any detergent in the salt dispenser. It will cause a malfunction.
- Wipe off any spilled salt around the salt dispenser cap. Saline solution that runs into can cause corrosion in the tub and to the dishwasher load.
- Seal the cap properly by aligning it horizontally and turning it clockwise. A loosely fitted cap may cause the saline solution to leak from the salt dispenser into the tub and cause corrosion.
- After refilling the dishwasher salt, a wash programme should be operated without dishes, as any spilled salt inside the appliance may cause rust or damage to the appliance if the left unwashed.

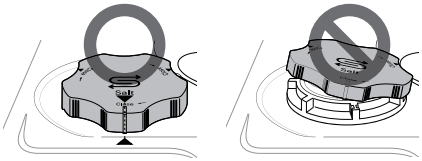

Adding Rinse Aid

The **Rinse Aid Refill** icon appears in the display when more rinse aid is needed.

The use of rinse aid is recommended to prevent water spots on dishes and to enhance drying results.

1 Open the rinse aid lid by lifting up the flap.

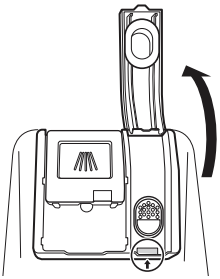

2 Add a liquid rinse aid to the maximum fill level. The rinse aid should be settled in the dispenser while filling, or air bubbles may result in poor drying results.

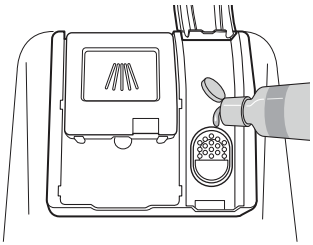

3 Close the lid to lock the dispenser. Rinse aid is dispensed automatically during the final rinse cycle.

⚠ CAUTION

- Wipe off any spilled rinse aid to prevent suds.

NOTE

- Only use liquid rinse aid in the appliance.
- Do not overfill the rinse aid dispenser.
- Too much or too little rinse aid can inhibit the drying results.
- If rinse aid flows out of the dispenser, wipe it off. Otherwise many suds can occur and stain the dishwasher.

Setting the Rinse Aid Level

The dispenser has five adjustment levels. The default programme is rinse aid level 2. This can be checked and altered by using the buttons on the control panel.

1 Ensure the appliance is off.

2 Press **Power** and **Двойная зона (Dual Zone)** simultaneously to check the current setting.

3 Press **Отсрочка старта (Delay Start)** to change the rinse aid dispenser setting. Each press of the button changes the setting one step from L0(off) to L4.

4 Once the desired rinse aid dispenser setting is selected, press **СТАРТ (START)** to save.
   - The power turns off after saving.

⚠ CAUTION

- If the rinse aid lid is not closed properly, a large amount of rinse aid will release into the tub and cause washability problems.

NOTE

- The **Rinse Aid Refill** icon will illuminate when more rinse aid is needed.
- If you notice cloudy spots, streaks or water marks on the glassware after washing, increase the setting level.
- Setting the control too high can cause foaming, which will cause poor wash results.
- If the glass is smeared or foam is present on the bottom, decrease the level setting.
- Setting the rinse aid control too low can cause spotting and streaking on dishes and poor drying results.

Control Panel

Control Panel Features

For Steam Models

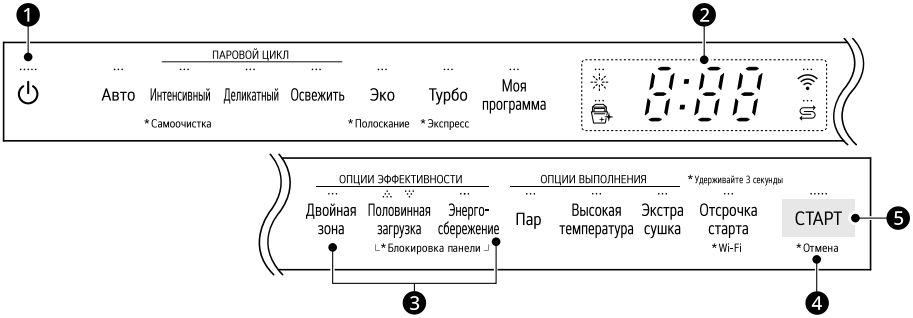

❶ **Power**

- Press **Power** button to turn power on and off.
- After the cycle is complete, the power automatically turns off for purposes of safety and economy.
- If there is a power surge, power outage, or disruption of any kind, power is automatically turned off for safety.
- When power is connected again, it will turn on automatically and resume the cycle.

❷ **Display**

- 8:88 : **Digital Display**
  - The digital display on the control panel shows the ESTIMATED cycle time. When the cycle and options are selected, the display shows the total estimated time to complete those selections. During operation, the display shows the remaining estimated operating time.
  - The estimated time shown on the display does not include delay times for heating water, etc.
  - If **Отсрочка старта (Delay Start)** is selected, the display shows the delay time in hours.
  - The **Авто (Auto)** cycle time may vary depending on the soil level of your load.
- : **Rinse Aid Refill Icon**
  - This icon flashes when the rinse aid level is low. The LED automatically shuts off when the rinse aid is refilled or the level is set to 0.
- : **Machine Clean Icon**
  - This icon flashes after every 30 cycles.
  - To activate or deactivate the icon, press the **Деликатный (Delicate)** button for 3 seconds.
- : **Wi-Fi**
  - When the appliance is connected to the internet through a home Wi-Fi network, this icon illuminates.
- : **Salt Refill Icon**
  - This icon flashes when the salt level is low. The LED automatically shuts off when the salt is refilled.

❸ **Chime On/Off**

- To activate or deactivate the button sounds, press and hold **Двойная зона (Dual Zone)** and **Энергосбережение (Energy Saver)** simultaneously for 3 seconds. The error alert sound cannot be turned off.

❹ **Отмена (Cancel)**

- The drain pump activates and the cycle cancels. Once the appliance finishes draining, the power turns off.
- Press and hold **СТАРТ (START)** button for 3 seconds to activate the cancel function.

❺ **СТАРТ (START)**

- To operate the appliance, either (depending on display type) press **СТАРТ (START)** button and close the door or close the door and press **СТАРТ (START)** button.
- If **СТАРТ (START)** button is not pressed to start the cycle within 4 minutes, the power will automatically turn off.

Wash Cycles

Wash Cycles

Авто (Auto)
This cycle senses the soil amount and water clarity and optimizes the wash to achieve the best cleaning. The wash time may vary depending on the soil level.

Интенсивный (Intensive)
This cycle is for heavily soiled dishes and dishes with hardened on soil. This cycle defaults to the strongest spray intensity and uses it to wash heavily soiled dishes.

Деликатный (Delicate)
Use this cycle to clean delicate items such as fine china and stemware.

Освежить (Refresh)
This cycle freshens up and warms dishes that have been unused for a long time.

- Do not use detergent when using this cycle.

Эко (Eco)
It provides the most efficient energy and water consumption for a good washing result and drying result on a normally soiled load and as it uses very little energy.

Турбо (Turbo)
This cycle will clean moderately soiled dishes using slightly more energy and water.

- **Экстра сушка (Extra Dry)** is set to on as default. If you do not want to dry dishes after washing, turn off the **Экстра сушка (Extra Dry)** option. Not drying the dishes will result in a shorter cycle time.

Моя программа (Download Cycle)
Use a dedicated cycle downloadable via Wi-Fi or NFC. (depending on model).

NOTE

- Only the cycle code for the currently downloaded cycle appears on the appliance. See the smartphone app for cycle codes, names, and more information about the available cycles.
  - Default Cycle: P1. Pots & Pans

Самоочистка (Machine Clean)
This cycle is for cleaning the inside of the appliance. Use the cycle without dishes in the appliance. It eliminates residual soils, odor, white spots, limescale, and other dirt. Add citric acid or another cleaning agent for more effective results.

- Press and hold **Интенсивный (Intensive)** for 3 seconds to activate.

Полоскание (Rinse)
This cycle is a quick rinse only for dishes that will not be washed immediately. The cycle rinses dishes that have excess soil to soften dried on residue. Rinsing the dishes helps prevent odors in the appliance.

- Press and hold **Эко (Eco)** for 3 seconds to activate.

NOTE

- Do not use detergent with this option.
- This cycle does not have drying.

Экспресс (Express)
This cycle will quickly clean lightly soiled dishes.

- Press and hold **Турбо (Turbo)** for 3 seconds to activate.

NOTE

- This cycle does not have drying. Select the **Экстра сушка (Extra Dry)** option or another cycle for better drying. **Экстра сушка (Extra Dry)** will add to the overall cycle time.
- Detergent tablets are not recommended for use of **Экспресс (Express)** cycle. If the detergent tablets are used, it may cause detergent residue on dishes due to the relatively low rinse temperatures.

Options and Extra Functions

Select the desired cycle button and then select the options for that cycle. For more information, see the **Cycle/Option Guide** section.

Options and Extra Functions

Двойная зона (Dual Zone)
This option automatically sets the spray intensity to soft for the upper spray arm and strong for the lower spray arm. Place heavily soiled dishes like plates and bowls in the lower rack and lightly soiled dishes like cups and small plates in the upper rack to get the best results.

Половинная загрузка (Half Load)
This option washes intensively by selecting the upper or lower racks. For small loads, use just the upper or lower rack to save energy and time. By pressing the **Половинная загрузка (Half Load)** button, the settings ∴ (Upper), ∵ (Lower) and the cancellation of the this option are available.

Энерго-сбережение (Energy Saver)
This option saves energy by reducing the wash and rinse temperatures. Wash time is increased to maintain wash results. Do not use this cycle with heavily soiled dishes.

Пар (Steam)
This option adds steam during the cycle to improve wash results.

Высокая температура (High Temp)
Raises the main wash or heating rinse temperature to improve cleaning.

- A chime will sound to alert you of any residual temperatures inside the appliance. Wait for the appliance to completely cool down before opening the door.

Экстра сушка (Extra Dry)
Select this option for better drying results. This option adds extra drying time to the cycle and raises the heating rinse temperature.

- When the rinse aid is empty, this option is selected automatically.

Отсрочка старта (Delay Start)
This feature delays the start of a selected cycle. Each time the **Отсрочка старта (Delay Start)** button is pressed, the delay time increases by an hour. The delay time can be set from 1 to 12 hours, in one-hour increments.

- To cancel this feature, turn the power off.
- To change the cycle and cycle option, open the door and then select another cycle and cycle option. The countdown will continue.

Блокировка панели (Control Lock)
This feature helps prevent settings from being changed during a cycle. Selecting this feature locks all of the buttons, except for the **Power** button, on the control panel. This feature does not lock the door.

- On models with the external display, while a cycle is running, press and hold **Половинная загрузка (Half Load)** and **Энерго-сбережение (Energy Saver)** simultaneously for 3 seconds to activate or deactivate this feature. On models with a concealed display, open the

door during operation and follow the same instruction.

- When this feature is activated, the display code CL will show on the display.
- To start a new cycle, deactivate this feature.
- This feature can be set at any time by turning on the appliance.

Wi-Fi

Press and hold **Отсрочка старта (Delay Start)** for 3 seconds to connect to the network. Refer to **SMART FUNCTIONS** sections for detailed information about this feature.

Auto Open Dry

This feature may vary depending on the model purchased.

The Auto Open Dry feature enhances the drying performance by opening the door automatically during the drying stage within the displayed program time. For optimum drying results wait until the program ends before unloading the dishwasher. The program is fully complete when the display shows "End". The door opening time varies depending on the program selected.

- To activate or deactivate this feature, press and hold the **Энерго-сбережение (Energy Saver)** button and the **Высокая температура (High Temp)** button simultaneously for 3 seconds.
- This feature is not available when the **Самоочистка (Machine Clean)** and **Полоскание (Rinse)** cycle is selected.
- When you select the **Моя программа (Download Cycle)**, this feature may operate even if the feature is deactivated. Because the **Моя программа (Download Cycle)** is designed to achieve the best results in a specific purpose regardless of appliance settings.
- The display shows whether this feature is on or off.

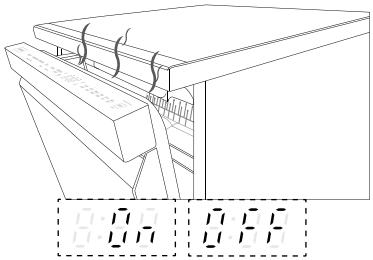

⚠ WARNING

- Keep children away from the appliance while the appliance is operating. Exposure to high temperature steam may cause scalding or burns.

Status Indicator Light

The Status Indicator light at the bottom of the dishwasher shows the status of the appliance: whether it has encountered any problems,whether it is operating normally, or whether it is ready to wash dishes.

White LED

- Pulses when the cycle is running
- Remains on when the cycle is finished.
- Turns off when the door is opened.
- Turn the power on, and then press and hold the **Высокая температура (High Temp)** button for 3 seconds until On shows on the display.
  - The default setting is on OFF. When OFF shows on the display, the white LED stays on for 90 seconds after the cycle has finished.
  - You can set the light setting to on the display so that the dishwasher keeps the white LED on until the door is opened manually. (and the Auto Open Dry feature is set to OFF).

Red LED

- Flashes if the appliance encounters an error. For more information about error codes, see the **TROUBLESHOOTING** section.

Programme Table

Programme Guide

On DB475*** Models

Programme	Soil Level	Wash		Rinse		Dry
		Pre-wash	Main wash	Rinse	Heating rinse	
Авто (Auto)	All levels	●	● (65 - 70 °C)	●	● (62 °C)*1 (70 °C)*2	●
Интенсивный (Intensive)	Heavy	●	● (75 °C)	●	● (62 °C)*1 (70 °C)*2	●
Деликатный (Delicate)	Light	●	● (55 °C)	●	● (62 °C)*1 (70 °C)*2	●
Освежить (Refresh)		●		●	● (62 °C)*1 (75 °C)*2	●
Эко (Eco)	Moderate	●	● (48 °C)*1 (42 °C)*2	●	● (38 °C)*1 (64 °C)*2	●
Турбо (Turbo)	Moderate	●	● (65 °C)	●	● (62 °C)*1 (65 °C)*2	
Экспресс (Express)	Light	●	● (45 °C)	●	● (62 °C)*1 (60 °C)*2	
Полоскание (Rinse)	Light			●		
Самоочистка (Machine Clean)		●	● (50 °C)	●	● (70 °C)	●

*1 **Auto Open Dry** feature is on.

*2 **Auto Open Dry** feature is off.

NOTE

- When the **Auto Open Dry** feature is activated, the heating rinse temperature may vary.

Regulation for Europe(On DB475*** Models)

Programme	Water Consumption (L)*1	Energy Consumption (kWh)*1	Duration (min)*1
Авто (Auto)	12,9	0,91 - 0,97	162
Интенсивный (Intensive)	23,1	1,60	185
Деликатный (Delicate)	16,5	1,07	124
Эко (Eco)	9,5	0,54	299
Освежить (Refresh)	10,0	0,76	120
Турбо (Turbo)	18,5	0,84	78
Экспресс (Express)	9,6	0,58	56
Полоскание (Rinse)	6,6	0,01	18
Самоочистка (Machine Clean)	12	0,78	83

*1 **Auto Open Dry** feature is on.

NOTE

- Running time may vary according to the water temperature, ambient temperature, water pressure and voltage.
- Information that the values given for programmes other than the eco programme are indicative only.

NOTE

- Regulation EU 2019/2022 is related to the Energy Efficiency classes by Regulation EU 2019/2017.
- Scan the QR code on the energy label supplied with the appliance, which provides a web link to the information related to the performance of the appliance in the EU EPREL database. Keep the energy label for reference together with the owner's manual and all other documents supplied with the appliance.
- The model name can be found on the rating label of the appliance. Open the door and look at the right side of the door.
- To find the same information in EPREL, visit https://eprel.ec.europa.eu and search using the model name.

Available Options

NOTE

- The **Энерго-сбережение (Energy Saver)** option is not available with the **Высокая температура (High Temp)** or **Экстра сушка (Extra Dry)** option.
- The **Отсрочка старта (Delay Start)** option can be selected for every washing programme in this table.

For Steam Models

Programme	Двойная зона (Dual Zone)	Половинная загрузка (Half Load)	Энерго-сбережение (Energy Saver)	Пар (Steam)	Высокая температура (High Temp)	Экстра сушка (Extra Dry)
Авто (Auto)	●	●	●	●	●	●
Интенсивный (Intensive)	●	●		●	●	●
Деликатный (Delicate)		●	●	●		●
Освежить (Refresh)				●		●
Эко (Eco)	●	●	●	●	●	●
Турбо (Turbo)	●			●	●	●
Экспресс (Express)	●				●	●
Полоскание (Rinse)						
Самоочистка (Machine Clean)						
Моя программа (Download Cycle)						

Information for Energy Test (EN60436)

Appliance loaded in accordance with standard specifications.

NOTE

- When the salt dispenser is operated, the data below increases.
  - Water Consumption: 4 L
  - Energy Consumption: 30 W
  - Duration: 4 minutes

For Models with Auto Open Dry Function

- Capacity: 14 place settings
- Comparability programme: **Эко (Eco)**
  - The **Эко (Eco)** programme is used to assess compliance with the EU ecodesign legislation.
- Rinse Aid setting: L4
- Reference cleaner: 22 g of detergent into the dispenser inside.
- Height-adjustable Rack-U position: Middle
- **Auto Open Dry** setting: On
- Filter type: Manual

Loading the Dishes

DB475*** model

- Correct loading is done in accordance with the images provided in this chapter.
- Incorrect loading may result in lower drying or cleaning performance.

Cutlery Rack

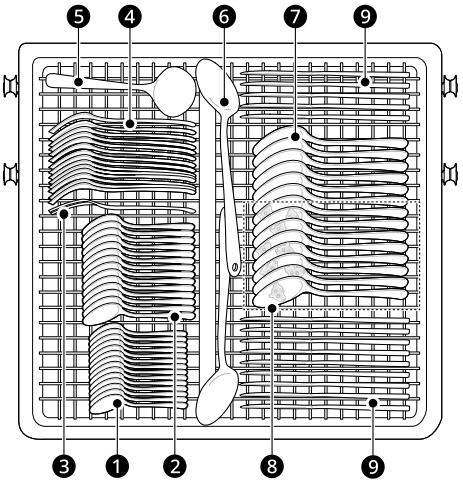

❶ Tea Spoons(No soiling)

❷ Dessert Spoons(No soiling)

❸ Serving Fork(No soiling)

❹ Forks(Egg)

❺ Gravy Ladle(No soiling)

❻ Serving Spoons(No soiling)

❼ Soup Spoons(Oat flake)

❽ Soup Spoons(Oat flake): 8 soup spoons are soiled.

❾ Knifes(No soiling)

Upper Rack

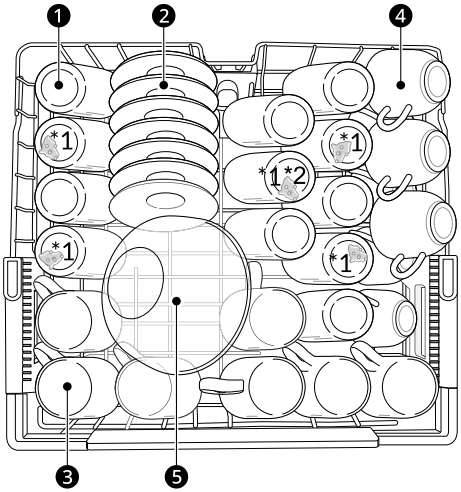

❶ Glasses(Milk)

*1 There are 5 glasses stained with milk.

*2 Milk Glass for EN60704-2-3: 2020

❷ Saucers(Black tea)

❸ Mugs(Black tea)

❹ Cups(Black tea)

❺ Glass bowl(Meat)

Lower Rack

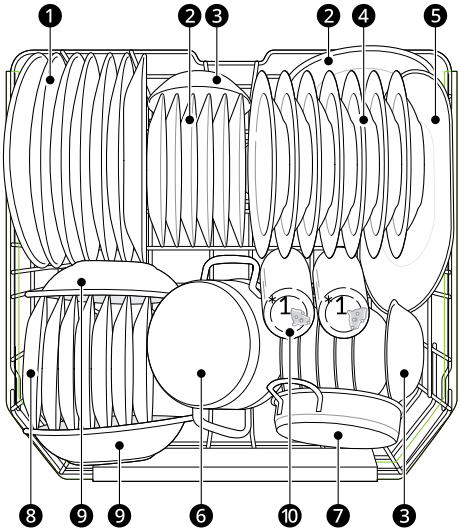

❶ Dinner plates(Egg)

❷ Melamine Dessert Plates(Egg)

❸ Dessert Bowls(Oat flake)

❹ Soup plates(Oat flake)

❺ Oval Platter(Meat)

❻ Small Pot(Spinach + Margarine)

❼ Oven Pot(Meat)

❽ Dessert Plates(Spinach)

❾ Melamine Bowls(Margarine)

❿ Glasses(Milk)

*1 There are 5 glasses stained with milk.

Loading the Dishwasher

For effective washing results, always follow the instructions.

- Remove large particles of food debris from plates including bones etc. before loading.
- Items with burnt on food should be soaked prior to loading the dishwasher.

- Deep based items should be placed upside down.
- Plastic items will not dry well, compared to other items.
- Make sure that all items do not touch each other.

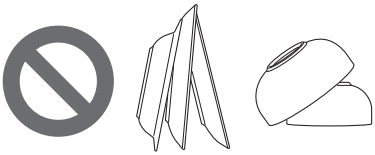

Items not Suitable for Dishwashers

The combination of high water temperature and dishwasher detergents may damage certain items. Do not wash the following items.

- Copper or anodised aluminium
- Hand painted silver or gold leaf crockery
- Wood or bone handled utensils
- Iron or non rust proof utensils
- Plastic items which are not appliance safe
- Expensive ware such as silver and dishes with golden rings
- Fragile item such as crystal glasses

⚠ CAUTION

- Do not place pots or pans with plastic handles in the appliance as the handles may deteriorate due to the heat and detergent.
- Water proof or long lasting lipstick smudges on glasses may not be removed during the wash.

Loading the Lower Rack

Daily Use Load

The lower rack is suitable for dinner plates, soup bowls, dishes, pots, pans, lids and even a grill tray.

Plates should be positioned upright and facing the centre of the rack and pots, pans and large dishes must be turned upside down.

To make it easier to load larger dishes, the front row of tines can be folded down.

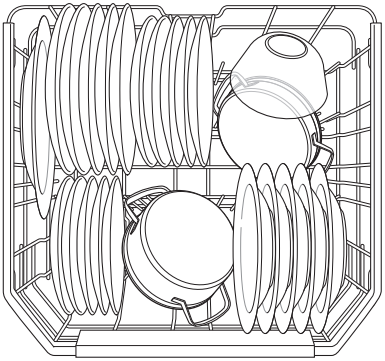

⚠ CAUTION

- The spray arms must not be blocked by items that are too tall or hang through the baskets. Test for free movement by manually rotating the spray arms.

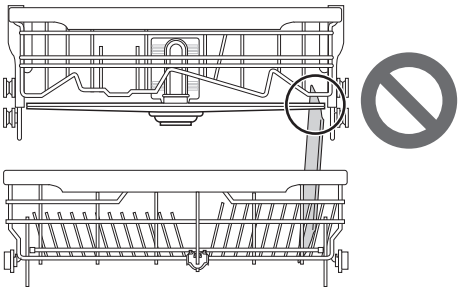

Folding Down the Rack Tines

Fold tines down to fit larger dishes; pull tines back up to fit smaller dishes.

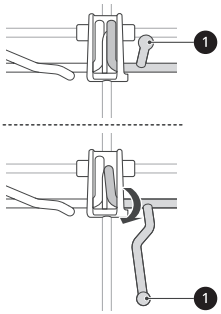

Loading the Upper Rack

Daily Use Load

The upper rack is suitable for delicate items such as, small plates, long cutlery, cups, glasses and appliance safe plastic items.

Cups, glasses and bowls must be positioned upside down.

Plates should be positioned upwards with the plate.

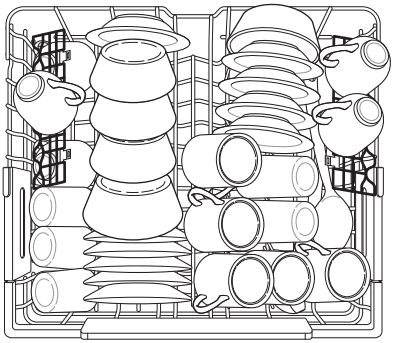

The cup racks provide support for long stem glasses.

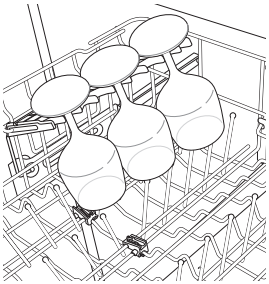

The left side row of tines can be folded down or the cup racks can be folded up out of the way for tall crockery items.

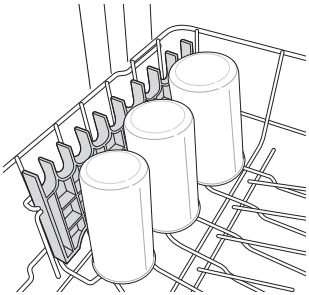

⚠ CAUTION

- The spray arms must not be blocked by items that are too tall or hang through the baskets. Test for free movement by manually rotating the spray arms.

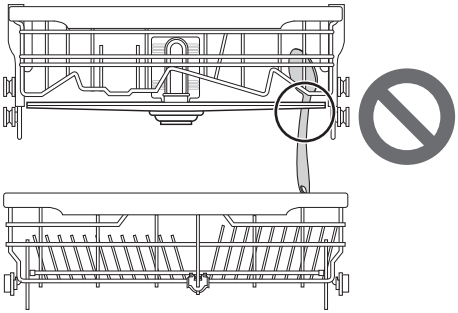

Removing and Replacing Cup Racks

The left and right cup racks are interchangeable and can be removed.

1 Slide cup rack down into its closed position.

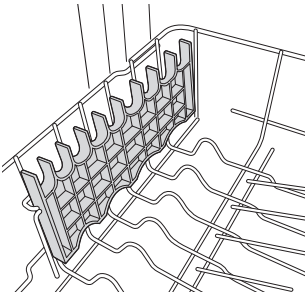

2 Locate assembly slot ❶ on cup rack and firmly pop rack off support bar on that side.

- The rack on the left pops free at the back. The rack on the right pops free at the front.

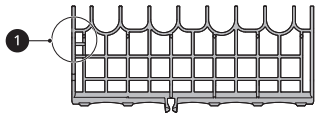

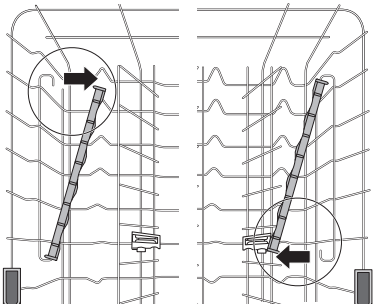

3 Slide cup rack off support bar on opposite side.

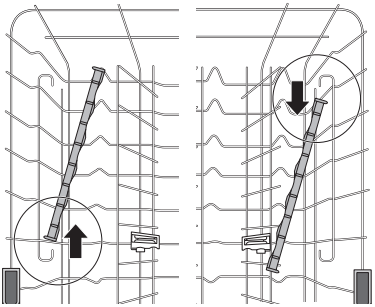

4 Reverse instructions to replace cup rack.

Height Adjustable Upper Rack

The height of the upper rack can be adjusted when you load glasses with long stems or tall crockery items.

There are three available positions for adjusting the height of the upper rack to create more space.

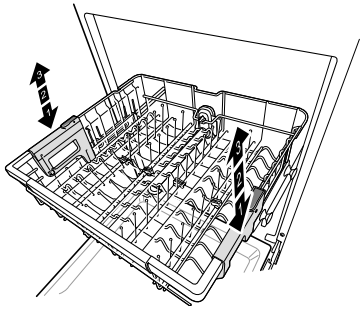

Lowering the Rack

Hold the rack at the centre of each side to support its weight. Then, push the button on each side to release the rack and lower it to the lower position.

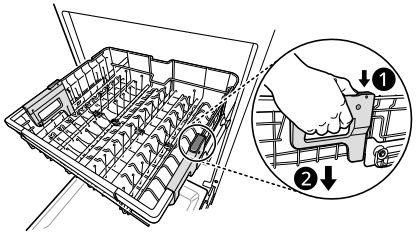

Raising the Rack

Lift the rack at the centre of each side until the rack locks into place in the upper position. It is not necessary to lift the lock levers to raise the rack.

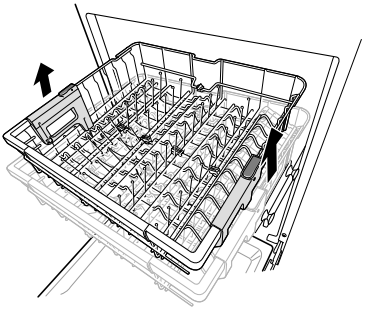

Possible plate size according to the upper rack position

Upper Rack Position	Plate Size (mm)		
	Upper Rack		Lower Rack
	with Cutlery Rack	without Cutlery Rack	
Upper	165	215	300
Middle	193	243	272
Lower	221	271	244

⚠ WARNING

- Before adjusting, ensure the rack is empty of all dishes. Otherwise dishes may get damaged or you may get injured.

NOTE

- Raise the upper rack without pushing the buttons on each side. Pushing the buttons when raising the rack will prevent the rack from locking into position.
- To set the rack to the middle position, it may be easier to lower the rack all the way down and then raise each side of the rack individually until it clicks into place.

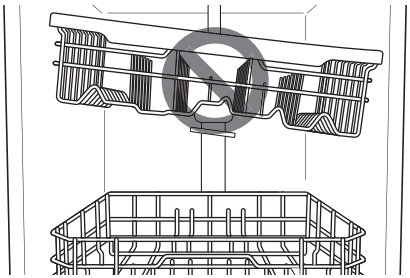

- There is a 56 mm gain in height when the upper rack is moved to the lower position.
- After adjusting the rack levels, check that the spray arms are free to rotate.
- With the lower position of the upper rack, check if the bottom part of upper rack including spray arm is not disturbing items on the lower rack.
- When the upper rack is in the lower position, push in the upper rack first, and the lower rack later.
- Pull out the lower rack first, and the upper rack later.
- When the upper rack is in the lower position, the possible height of dishes differs with models where the cutlery rack is fitted.

Loading the Cutlery Rack

The cutlery rack is best suited for flatware and most cooking or serving utensils. It can also fit small prep bowls and lids. The separators on the cutlery rack help keep utensils separated to avoid damage and improve cleaning.

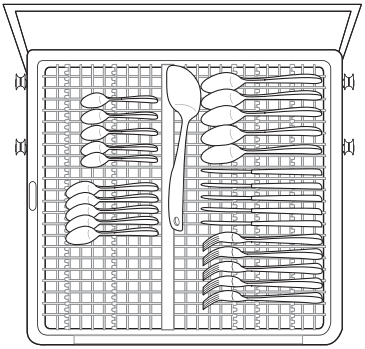

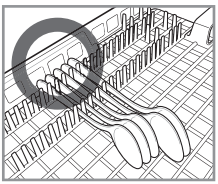

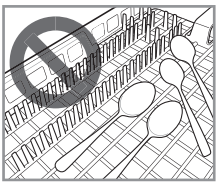

If the handles of your cutlery are too thick, then reverse the pieces so that the handles face the other direction.

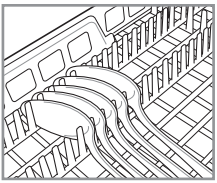

Height Adjustable Tray

The tray on the left side can be adjusted to a high or low position to accommodate utensils or cutlery of different sizes. Remove dishes before adjusting the tray. Adjust the tray by sliding the lever.

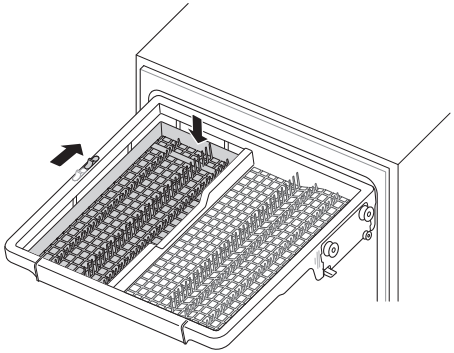

Removing the Cutlery Rack

The entire cutlery rack can be removed if more space is needed on the upper rack for larger items.

Always remove the cutlery from the rack before removing the rack.

Pull the rack out to the end of the rails. Then, lift the front of the rack so that the rollers clear the stop on the end of the rail. The rack can now be slid forward and removed from the rails.

Inserting the cutlery rack is in the reverse order.

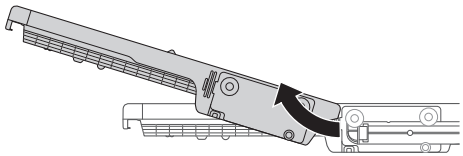

⚠ WARNING

- Be careful when loading and unloading items with sharp edges. Load sharp knives with the blade down to reduce the risk of injury.

Adding Cleaning Agents

Adding Detergent to the Dispenser

- Remove the label on the dispenser prior to running the appliance for the first time.
- The amount of detergent needed depends on the cycle, load size, and soil level of dishes.
- Put detergent into the detergent compartment before starting any cycle, except the **Полоскание (Rinse)** cycle.

1 Push the button on the dispenser lid to open the cover.

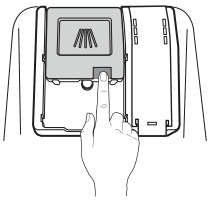

2 Add dishwashing detergent to the main wash compartment until the level is between the lines marked 15 and 25.

- Fill to over the 25 line for hard water or heavily soiled loads.
- Fill to the 15 line for soft water or lightly soiled loads.

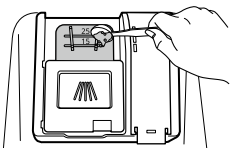

3 Push the detergent lid to slide the lid closed until it clicks.

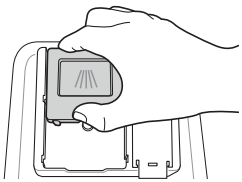

4 If a prewash is desired, fill the recessed prewash compartment area on the lid with detergent.

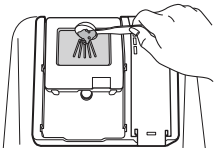

Programme	Amount of detergent
	Main wash (dispenser)
Авто (Auto)	20 g
Интенсивный (Intensive)	20 g
Деликатный (Delicate)	20 g
Освежить (Refresh)	-
Эко (Eco)	22 g
Турбо (Turbo)	20 g
Моя программа (Download Cycle)	20 g
Самоочистка (Machine Clean)	20 g
Полоскание (Rinse)	-
Экспресс (Express)	20 g

⚠ WARNING

- Dishwasher detergent and rinse aid contain chemical components, like all other household detergent. So, they must be kept out of the reach of children.

⚠ CAUTION

- Use only detergent intended for dishwashers. Incorrect detergent may cause the appliance to fill with suds during operation. Excess suds may reduce wash results and may cause the appliance to leak.
- To avoid damaging the appliance, do not pull up on the dispenser to close the appliance door.

- Only use the detergent and rinse aid that has been qualified with standard. Use of an unqualified detergent and rinse aid may present a risk of damage, corrosion, poor washing results, poor drying, and leakage.
- If too much detergent is used, too many suds can occur. It may cause leakage of suds and stain the dishes in the dishwasher.

NOTE

- Too much detergent can leave a film on dishes and in the tub, resulting in poor wash results.
- After washing, check whether the detergent was completely washed out.
- Some appliance detergent tablets may become stuck in the dispenser due to their excessive size. Tablets can be placed onto the base of the wash tub next to the filter before starting the cycle.
- Never use liquid dishwashing detergent in the appliance.
- Detergent tablets are not recommended for use with the **Экспресс (Express)** cycle. If the detergent tablets are used, it may cause detergent residue on dishes due to the relatively low rinse temperatures.

Refilling

To maintain the effective dry results, check and refill rinse aid regularly.

To maintain the effective wash results, check and refill dishwasher salt regularly.

Checking the Rinse Aid

When the **Rinse Aid Refill** icon illuminates lit, it means the rinse aid is almost empty. If necessary, refill the rinse aid dispenser.

Checking the Dishwasher Salt

After refilling the dishwasher salt, a wash programme should be operated without dishes, as any spilled salt inside the appliance may cause rust or damage to the appliance if the left unwashed.

When the **Salt Refill** icon illuminates, it means the salt is almost empty. If necessary, refill the salt dispenser.

⚠ CAUTION

- Do not add detergent or any other solution into the water softener housing other than dishwasher salt. Doing so will cause the water softening system to malfunction.

Useful Tips

Drying

- Plastic items may cause poor drying results compared to other items.
- To assist drying, the door can be opened for a short period of time after the cycle.

NOTE

- Make sure that all items do not touch each other.
- If dry results are not good or water stains remain, add the **Экстра сушка (Extra Dry)** option or set the rinse level.
- When using tablet type (2 in 1, 3 in 1) detergent, an additional rinse may be required, depending on the volume of dishes, in this case use the **Экстра сушка (Extra Dry)** option or set the rinse level.
- We recommend activating this function on models with automatic door opening.

Unloading the Dishwasher

- Before unload the dishes, check if the dishes cooled down to hand-warm condition.
- Empty the lower rack first and then the upper one. It will avoid water dripping from the upper rack onto the dishes below.

⚠ WARNING

- Do not pull out all full loaded racks at on time, the appliance can topple over. Unload each rack one by one.

SMART FUNCTIONS

LG ThinQ Application

The **LG ThinQ** application allows you to communicate with the appliance using a smartphone.

LG ThinQ Application Features

Communicate with the appliance from a smartphone using the convenient smart features.

Monitoring
This function checks the current status, cycle, options running time and cycle end time for the application on a single screen.

Моя программа (Download Cycle)
You can download new and special cycles that are not included in the basic cycles on the appliance.

Appliances that have been successfully registered can download a variety of specialty cycles specific to the appliance.

Only one cycle can be stored on the appliance at the same time.

Once cycle download is completed in the appliance, the appliance keep the downloaded cycle until a new cycle is downloaded.

Machine Clean Reminder
This function shows how many cycles remain before it is time to run the **Самоочистка (Machine Clean)** cycle.

Smart Diagnosis
This function provides useful information for diagnosing and solving issues with the appliance based on the pattern of use.

Settings
Allows you to set various options on the appliance and in the application.

Push Alert
When the cycle is complete or the appliance has problems, you have the option of receiving push notifications on a smartphone. The notifications are triggered even if the **LG ThinQ** application is off.

NOTE

- In the following cases, you must update the network information for each appliance in the **LG ThinQ** application under **Device Cards** ⟶ **Settings** ⟶ **Change Network**.
  - wireless router is changed
  - wireless router password is changed
  - Internet service provider is changed
- The application is subject to change for appliance improvement purposes without notice to users.
- Functions may vary by model.

Installing LG ThinQ Application and Connecting an LG Appliance

Models with QR Code

Scan the QR code attached to the product using the camera or a QR code reader application on your smartphone.

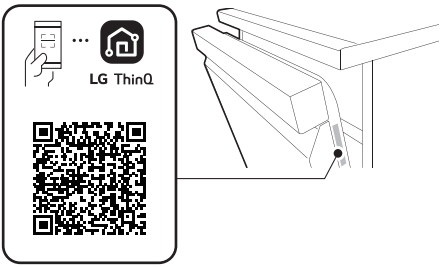

Models without QR Code

1 Search for and install the **LG ThinQ** application from the Google Play Store or Apple App Store on a smartphone.

ENGLISH

2 Run the **LG ThinQ** application and sign in with your existing account or create an LG account to sign in.

3 Touch the add (+) button on the **LG ThinQ** application to connect your LG appliance. Follow the instructions in the application to complete the process.

NOTE

- To verify the Wi-Fi connection, check that icon on the control panel is lit.
- The appliance supports 2,4 GHz Wi-Fi networks only. To check your network frequency, contact your Internet service provider or refer to your wireless router manual.
- **LG ThinQ** is not responsible for any network connection problems or any faults, malfunctions, or errors caused by network connection.
- The surrounding wireless environment can make the wireless network service run slowly.
- If the distance between the appliance and the wireless router is too far, the signal strength becomes weak. It may take a long time to connect or installation may fail.
- If the appliance is having trouble connecting to the Wi-Fi network, it may be too far from the router. Purchase a Wi-Fi repeater (range extender) to improve the Wi-Fi signal strength.
- The network connection may not work properly depending on the Internet service provider.
- The Wi-Fi connection may not connect or may be interrupted because of the home network environment.
- The appliance cannot be connected due to problems with the wireless signal transmission. Unplug the appliance and wait about a minute before trying again.
- If the firewall on your wireless router is enabled, disable the firewall or add an exception to it.
- The wireless network name (SSID) should be a combination of English letters and numbers. (Do not use special characters.)
- Smartphone user interface (UI) may vary depending on the mobile operating system (OS) and the manufacturer.
- If the security protocol of the router is set to **WEP**, you may fail to set up the network. Please change it to other security protocols (**WPA2** is recommended) and connect the product again.

Deactivating Network Connection

On your smartphone, disconnect to your home Wi-Fi network.

1 Run the **LG ThinQ** application.

2 Select and touch the **Dishwasher** in the application.

3 Select and touch the **Delete Product** on the settings menu to disconnect it.

Wireless LAN Module Specifications

Module Name	LCW-003
Frequency Range	2412 to 2472 MHz
Output Power (Max)	18.37 dBm

Module Name	LCWB-001
Wireless LAN Frequency Range	2412 to 2472 MHz
Wireless LAN Output Power (Max)	18.14 dBm
Bluetooth Frequency Range	2402 to 2480 MHz
Bluetooth Output Power (Max)	7.03 dBm

Wireless function S/W version : V 1.0

For consideration of the user, this device should be installed and operated with a minimum distance of 20 cm between the device and the body.

NOTE

- Only one wireless module applies to the product.

Declaration of Conformity

CE

Hereby, LG Electronics declares that the radio equipment type Dishwasher is in compliance with Directive 2014/53/EU. The full text of the EU declaration of conformity is available at the following internet address:

http://www.lg.com/global/support/cedoc/cedoc#

Open Source Software Notice Information

To obtain the source code that is contained in this product, under GPL, LGPL, MPL, and other open source licenses that have the obligation to disclose source code, and to access all referred license terms, copyright notices and other relevant documents, please visit https://opensource.lge.com.

LG Electronics will also provide open source code to you on CD-ROM for a charge covering the cost of performing such distribution (such as the cost of media, shipping, and handling) upon email request to opensource@lge.com.

This offer is valid to anyone in receipt of this information for a period of three years after our last shipment of this product.

Smart Diagnosis

This feature is only available on some models.

Use this feature to help you diagnose and solve problems with your appliance.

NOTE

- For reasons not attributable to LGE's negligence, the service may not operate due to external factors such as, but not limited to, Wi-Fi unavailability, Wi-Fi disconnection, local app store policy, or app unavailability.
- The feature may be subject to change without prior notice and may have a different form depending on where you are located.

Using LG ThinQ to Diagnose Issues

If you experience a problem with your Wi-Fi equipped appliance, it can transmit troubleshooting data to a smartphone using the **LG ThinQ** application.

- Launch the **LG ThinQ** application and select the **Smart Diagnosis** feature in the menu. Follow the instructions provided in the **LG ThinQ** application.

Using Audible Diagnosis to Diagnose Issues

Follow the instructions below to use the audible diagnosis method.

- Launch the **LG ThinQ** application and select the **Smart Diagnosis** feature in the menu. Follow the instructions for audible diagnosis provided in the **LG ThinQ** application.

1 Press the **Power** button to turn on the appliance.
   - Do not press any other buttons.

2 Place the mouthpiece of your smartphone in front of the display located on the control panel.

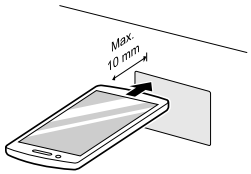

3 Press and hold the **Моя программа (Download Cycle)** button for 3 seconds or longer while holding the smartphone mouthpiece to the logo until the data transfer is complete.

- Keep the smartphone in place until the data transfer has finished. Time remaining for data transfer is displayed.

4 After the data transfer is complete, the diagnosis will be displayed in the application.

NOTE

- For best results, do not move the smartphone while the tones are being transmitted.

Customer Care and Service

Contact an LG Electronics customer information centre.

- To find an LG Electronics authorised service personnel, visit our website at www.lg.com and follow the instructions found there.
- Self-repair is not recommended as it could further damage the device and void the guarantee.

MAINTENANCE

To maintain performance and prevent problems, check the outside and inside of the appliance, including filters and spray arms regularly.

⚠ WARNING

- When cleaning the outside and inside of the appliance, do not use any solvent based solutions such as thinners or acetone. It may cause fire or explosion.

NOTE

- Prevent animals from nibbling on the power cable or water hose.

Cleaning and Caring

Cleaning the Exterior

In most cases, the exterior of the appliance can be cleaned with a soft damp cloth or sponge, then dried with a soft cloth. If the appliance has a stainless steel exterior, use a stainless steel cleaner.

⚠ CAUTION

- If cooking oil is spilled on the exterior of the product, wipe it off immediately. Do not clean the exterior of the product with cleaners which contain alcohol, thinners, bleach, benzene, flammable liquids, or abrasives. These substances may discolour or damage the appliance.

Cleaning the Interior

It is recommended to clean the interior, spray arms, or filters once every two weeks.

Clean the interior of the appliance periodically with a soft, damp cloth or sponge to remove food and dirt particles. Using harsh and solvent based chemicals can cause the internal tub to leave a white stain or the appearance of rust.

Food residue may be stuck in the narrow gaps inside the appliance after completion of washing. Wipe off all food residue.

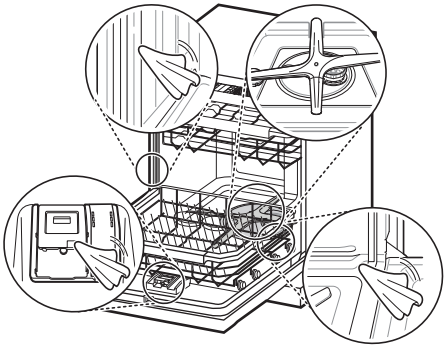

NOTE

- If you have not used the appliance for a long time, refresh the inside by running **Турбо (Turbo)** or **Самоочистка (Machine Clean)** programme with detergent. When the cycle is finished, clean the inside and outside of the appliance according to the **MAINTENANCE** instructions.

Cleaning the Tub

Using Citric Acid

Remove all dishes, cutlery basket and cutlery basket holder from appliance. Only racks should remain in tub. For best results, use citric acid powder (can be found in canning sections of most supermarkets or online). Measure 3 tablespoons (45 g) of citric acid powder. Fill main wash compartment with measured powder.

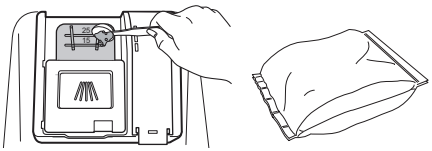

Using White Vinegar

If you cannot find citric acid powder, pour approximately 3/4 - 1 1/4 cups (200 - 300 mL) of white vinegar into shallow bowl and place in upper rack. Run **Авто (Auto)** cycle. Do not use detergent. When the cycle is finished, restart.

Run the programme a second time with/without vinegar.

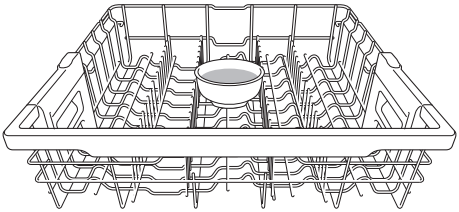

⚠ CAUTION

- Do not pour vinegar directly into the base.
- Excessive use of vinegar may cause damage to the appliance.

Cleaning the Filters

1 Remove the lower rack and position the bottom spray arm so a wider vee is open to the front.

2 Turn the inner filter counter-clockwise and take out the assembled inner filter and stainless steel filter.

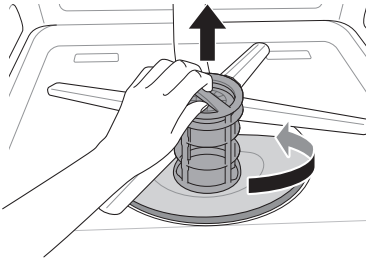

3 Clean the filters with a soft brush under running water. Reassemble the filters before reinstalling them.

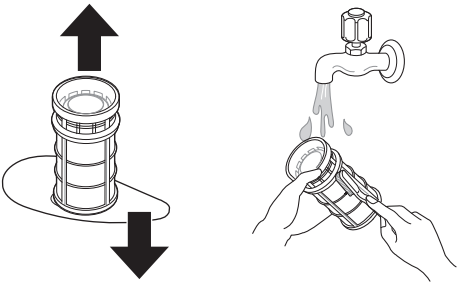

4 To replace the assembled filters, position the spray arm so the wider vee is toward the front. Fit the filters back into the filter holder and secure them by turning the inner filter clockwise until it clicks into place.

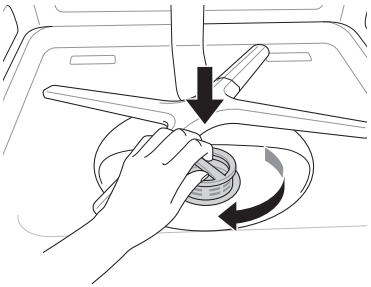

⚠ WARNING

- Be cautious of sharp edges when handling the stainless steel filter.

⚠ CAUTION

- After using the appliance, particles of food are filtered by the filters. Any unremoved food residue may cause bad smell. In addition, drainage may have a problem due to food residue stuck in the filters.

NOTE

- When inserting the filter, close it firmly until you hear it click into place.

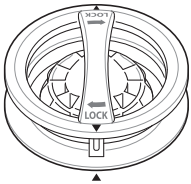

Cleaning the Spray Arms

If the spray arm holes are blocked by any food residue, dishes may not be cleaned well due to improper water spray.

Cleaning the Lower Spray Arm

1 Make sure that the water jet holes are not blocked by food particles.

2 If any food residue blocks the spray arm holes, remove it with a pin or any sharp tool.

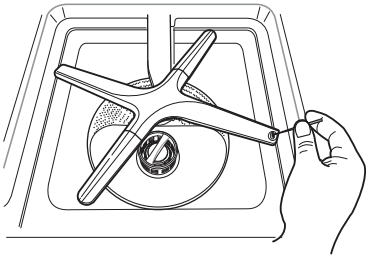

⚠ CAUTION

- To avoid breaking the variable angle spray arm end sections, do not pull or manually rotate them.

Cleaning the Upper Spray Arm

1 Pull the upper rack forward. Make sure that the water jet holes are not blocked by food particles.

2 When cleaning is necessary, remove the upper spray arm by turning the nut on the bottom of the spray arm 1/8 turn counterclockwise and pulling down.

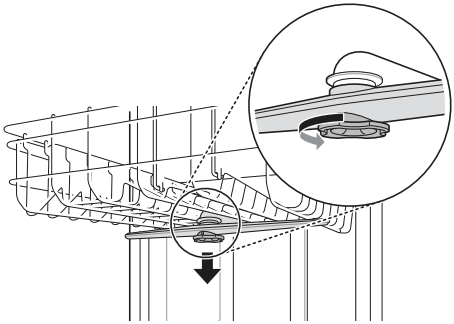

3 Remove food particles by rinsing or shaking the spray arm.

4 If any food residue blocks the spray arm holes, remove it with a pin or any sharp tool.

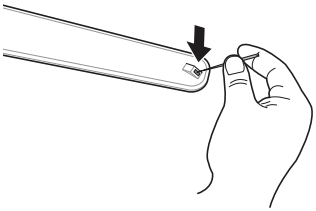

5 After removing the food residue, clean the spray arms holes under running water.

6 After cleaning the upper spray arm, press it up into place. Turn the nut 1/8 turn clockwise to make sure that the nut locks back into place.

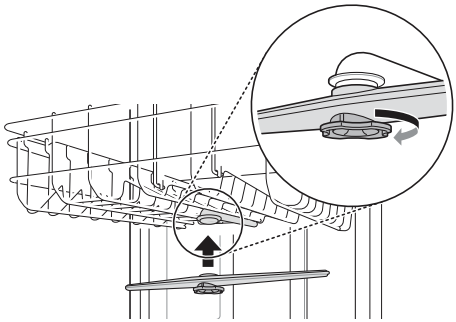

7 After assembly, check whether the spray arms rotate freely.

⚠ CAUTION

- Arms that cannot rotate freely as a result of obstructions or poor maintenance can cause water leakage from the door resulting in a malfunction or damage to property.

Cleaning the Water Supply Hose Filter

1 Unplug the appliance.

2 Turn off the water tap.

3 Unscrew the water supply hose.

4 Remove the seal and the plastic filter with a pair of small pliers or scissor grips.

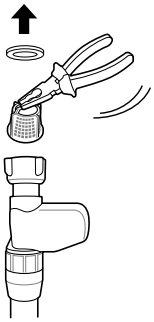

5 Clean the filter under running water with a brush.

6 Refit the filter and gasket and make sure that it is sitting correctly.

7 Refit and secure the water supply hose in reverse order. Do not use any mechanical device to tighten the hose. A soft cloth can be used to assist hand tightening.

NOTE

- If insufficient water flows into the appliance, check that the filter is not blocked.
- If there is a leak, the water supply hose will need to be checked for proper connection.
- Never over tighten the water supply valve or use mechanical devices to tighten.

Seasonal Maintenance and Storage

- If you will be absent for an extended period of time during warmer months, close the water valve and unplug the power cord, or turn off the circuit breaker. Clean the filter, tub and dispenser to prevent odour.
- If you will be absent for an extended period of time during colder months and there is a possibility of freezing temperatures, winterize the water supply lines and the appliance itself. Winterization must be performed by qualified service personnel.

TROUBLESHOOTING

Before Calling for Service

Operation of the appliance can lead to errors and malfunctions. The following tables contain possible causes and notes for resolving an error message or malfunction. You can remedy most of the problems by yourself, consequently save time and money, since you do not need to call service centre. The following table should assist you by troubleshooting.

Error Codes

The appliance is equipped with an automatic error-monitoring system to detect and diagnose problems at an early stage. If this appliance does not function properly or does not function at all, check the following before you call LG Electronics service centre.

Symptoms	Possible Cause & Solution
IE	**Water inlet problem.** • Check for a clogged, kinked or frozen water supply hose. • Check water supply.
OE	**Drainage Problem.** • Check for a clogged, kinked or frozen drain hose.
	Waste spigot is clogged. • Remove knockout on waste spigot.
	Filters are clogged. • Clean Filters.
bE	**Oversudsing caused by improper detergent, such as liquid dish soap.** • Do not use hand dishwashing liquids. Only use detergents which are designed for use in automatic dishwashers. • To remove detergent residue in the tub, pour approximately 100~200 ml of milk into a shallow bowl, place it to the upper rack and then run the appliance on the **Авто (Auto)** cycle.
	Failure to level appliance. • Make sure that the appliance is properly leveled.
HE	**Heater circuit failure** • Call for service if the same problem occurs again.
FE	**Excessive water supplied.** • Call for service if the same problem occurs again.
AE	**Water leakage problem** • Call for service if the same problem occurs again.
tE	**Thermistor failure** • Call for service if the same problem occurs again.

Symptoms	Possible Cause & Solution
LE	**Motor trouble** • Call for service if the same problem occurs again.
nE	**Vario motor trouble** • Call for service if the same problem occurs again.

Operation

Symptoms	Possible Cause & Solution
Noise	**Some level of noise is normal during operation.** • Detergent cover opening. • Drain pump at the beginning of drain cycle.
	The appliance is not level. • Adjust leveling feet.
	Nozzle arm knocking against dishes. • Reposition the dishes.
	Water pressure is too high. • Adjust water pressure.
Appliance will not operate.	**Door is not completely closed.** • Level the appliance again.
	Power supply or power cord is not connected. • Connect the power supply or cord properly.
	When the Блокировка панели (Control Lock) feature is activated, the display code CL will show on the display. • Deactivate the **Блокировка панели (Control Lock)** button. • Press and hold **Половинная загрузка (Half Load)** and **Энерго-сбережение (Energy Saver)** simultaneously for 3 seconds to activate or deactivate this feature.
	Fuse is blown or circuit breaker tripped. • Replace the fuse or reset the circuit breaker.
Appliance continuously beeps when the door is opened, during or right after a cycle has completed.	**The contents of the appliance are hot and care should be used when placing your hands inside the appliance.** • Close the door until the appliance and dishes have cooled down. The beeping will stop if the door is closed or the interior temperature has cooled.

Symptoms	Possible Cause & Solution
Water remains in sump after completion of cycle.	**Drain hose is kinked or clogged.** • Adjust hose or clear blockage.
	Water may remain if the power supply was lost before normal end of the course or was manually disconnected. • Re-start the course.
Sprays arms do not rotate smoothly.	**Holes of spray arms are blocked by food particles.** • Clean the holes of spray arms.
Upper rack is crooked.	**Rack is poorly adjusted.** • See the **Height Adjustable Upper Rack** section.
Lamps do not illuminate.	**Power is not connected.** • Connect power supply.
There is excessive foam inside the appliance.	**Failure to use the detergent exclusive for appliance.** • Use the detergent exclusive for appliance.
	An excessive amount of rinse may cause foam. • Reduce the rinse aid dispensing level.
Detergent is left in the detergent dispenser.	**Unbalanced upper rack.** • Adjust the left/right height of the upper rack.
	Detergent may not be dispensed because poor stacking of the dishes prevent automatic opening of the detergent dispenser. • Correctly arrange the dishes and always dry out the dispenser before adding new detergent so that it does not clump together.
Water leaks outside the appliance.	**The door may not be closed due to tilted appliance. In this case a water leak may occur.** • Check the levelling by adjust the leg.
	Wrong installation of drainage hose may cause water leak. • Check the connecting part of drainage hose.
	If the power is off, a water leak may be caused by a poor connection to the tap. • Check the connection water supply hose.

Performance

Symptoms	Possible Cause & Solution
Cloudiness on glassware	**Combination of excessive detergent and hard water** • Use less detergent and use a rinse aid to minimize the problem. • Check the setting of softening system.

Symptoms	Possible Cause & Solution
Black or gray marks on dishes	**Aluminum items rubbing dishes during cycle** • Reposition the dishes.
Yellow or brown film on inside surfaces of appliance	**Coffee or tea stains** • Eliminate the stain by using a stain removal product.
Yellow water remains inside the dishwasher.	**When initially using the appliance, Yellow water may generate in the water softener tank.** • This is a normal condition, and it is harmless to humans. It disappears after 1 - 3 cycles.
Spots and filming on dishes	**Wrong amount of detergent used** • Use the recommended amount of detergent.
	Overloading • Do not overload the appliance.
	Improper loading • See the **OPERATION** section.
	Insufficient water pressure • Water pressure should be between 0,05 - 1,0 MPa.
	Insufficient detergent • Add the recommended amount of detergent. See the **OPERATION** section.
	Rinse aid dispenser is empty. • Refill rinse aid dispenser.
	The water softener has no salt or insufficient the salt. • Check whether there is the salt in the water softener.
	Water hardness level may be set too low. • Increase the hardness level setting value.
	The rinse aid may be insufficient. • Refill the rinse aid or increase the dispensing level.
	Hard water buildup in the tub • Remove all dishes, cutlery basket and cutlery basket holder from appliance. Only racks should remain in tub. For best results, use citric acid powder (can be found in canning sections of most grocery stores or online). Measure 3 tablespoons (45 g) of citric acid powder. Fill main wash compartment with measured powder. If you cannot find citric acid powder, pour approximately 3/4 - 1 1/4 cups (200 - 300 mL) of white vinegar into shallow bowl and place in upper rack. Run **Авто (Auto)** cycle. Do not use detergent. When the cycle finish, run it again.

Symptoms	Possible Cause & Solution
Odour	**The previous cycle was stopped before completion and residual water remains in the appliance.** • Turn on the power, run the **Отмена (Cancel)** cycle option to remove the residual water, then run the **Турбо (Turbo)** cycle using detergent but with the appliance empty.
	There is food in the bottom of the unit or in the filter. • Clean the filter and the interior according to the **MAINTENANCE** section of the owner's manual.
	Unwashed dishes are left in the unit for a long time. • Cycle with one cup of white vinegar in a appliance safe glass or bowl placed on the upper rack. (Vinegar is an acid, and with constant use it could damage your appliance.)
Food soil remains on dishes.	**Improper cycle selection** • Select correct cycle based on soil level and type of dishware being washed.
	Water temperature is too low. • Check water supply connection or water heater setting.
	Dishwashing detergent was not used. • Use recommended detergent.
	Low inlet water pressure • Water pressure should be between 0,05 - 1,0 MPa.
	Water jet holes on spray arms blocked. • Clean the spray arms.
	Improper loading of dishes. • Make sure dishes do not block spray arm rotation or interfere with detergent dispenser.
	Filters are clogged. • Clean filters.
	Too much unremoved food debris on dishes. • Large particles of food residues should be removed from the dishes before starting wash.

Drying

Symptoms	Possible Cause & Solution
Dishes don't dry.	**Rinse agent dispenser empty.** • Check and refill the rinse agent dispenser if empty. For better drying result, slightly open the door after operation.

Symptoms	Possible Cause & Solution
Dishes don't dry.	**Tablets used may not have a built in rinse aid. This will reduce the drying performance.** • Change to a tablet that includes a rinse agent (contact the tablet manufacturer if unsure). Alternatively, you can use a liquid rinse agent in the dispenser if the tablets don't have a rinse agent built in.
	A cycle without the Экстра сушка (Extra Dry) option was selected. • Select a cycle that defaults to the **Экстра сушка (Extra Dry)** option.

Wi-Fi

Symptoms	Possible Cause & Solution
Your home appliance and smartphone are not connected to the Wi-Fi network.	**The password for the Wi-Fi that you are trying to connect to is incorrect.** • Find the Wi-Fi network connected to your smartphone and remove it, then register your appliance on **LG ThinQ**.
	Mobile data for your smartphone is turned on. • Turn off the **Mobile data** of your smartphone and register the appliance using the Wi-Fi network.
	The wireless network name (SSID) is set incorrectly. • The wireless network name (SSID) should be a combination of English letters and numbers. (Do not use special characters).
	The router frequency is not 2,4 GHz. • Only a 2,4 GHz router frequency is supported. Set the wireless router to 2,4 GHz and connect the appliance to the wireless router. To check the router frequency, check with your internet service provider or the router manufacturer.
	The distance between the appliance and the router is too far. • If the distance between the appliance and the router is too far, the signal may be weak and the connection may not be configured correctly. Move the location of the router so that it is closer to the appliance.

Information	You can see the month and year of manufacture on the label inside the dishwasher.
Информация	Вы можете увидеть месяц и год изготовления на этикетке внутри посудомоечной машины.
мәлімет	Жасалынған айы мен жылы ыдыс жуатын машинаның ішінде орналасқан апсырмада көрсетілген.

170, Seongsanpaechong-ro, Seongsan-gu, Changwon-si, Gyeongsangnam-do, 51533, Korea.
170, Сонгсанпэсонг-ро, Сонгсан-гу, Чангвон-си, Кенгсангам-до, 51533, Южная Корея.
170, Сонгсанпэсонг-ро, Сонгсан-гу, Чангвон-си, Кенгсангам-до, 51533, Оңтүстік Корея.