LG
Life's Good

Quick Start Guide

LED TV
LJ52**

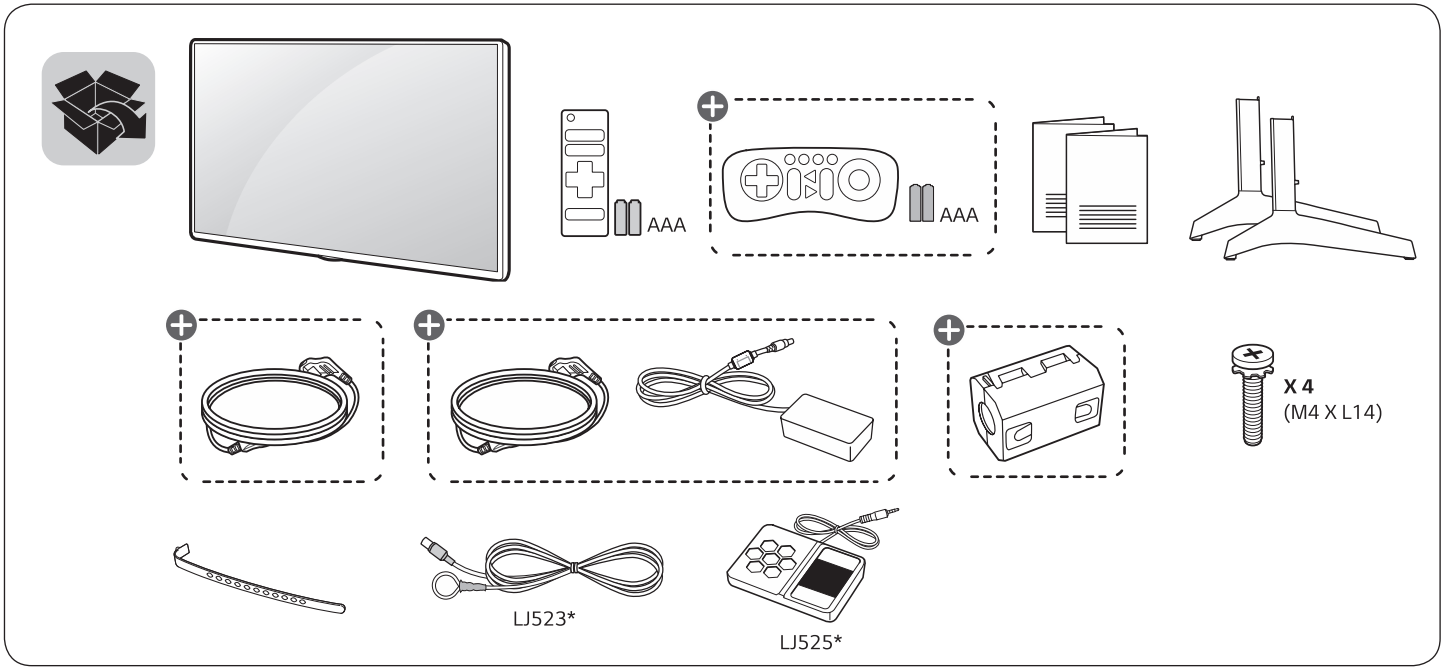

⊕ : Depending on model

Unpacking

Check your product box for the following items. If there are any missing accessories, contact the local dealer where you purchased your product. The illustrations in this manual may differ from the actual product and item.

*Image may vary depending on models

www.lg.com

P/No: MFL69446167 (1702-REV00)

English

- Read **Safety and Reference.**
- For the power supply and power consumption, refer to the label attached to the product.

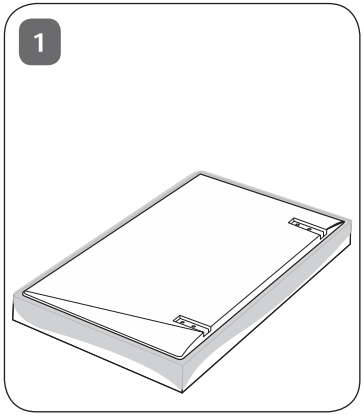

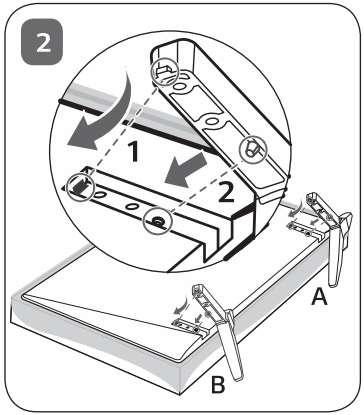

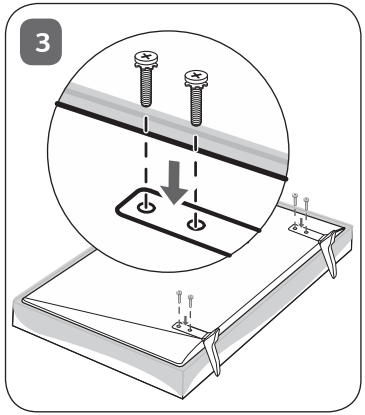

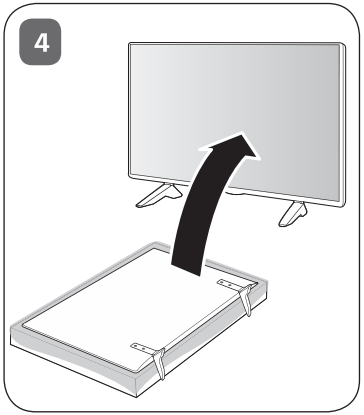

CAUTION

Image shown may differ from your TV.

When attaching the stand to the TV set, place the screen facing down on a cushioned table or flat surface to protect the screen from scratches.



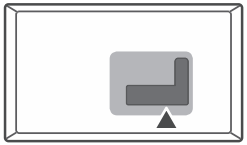

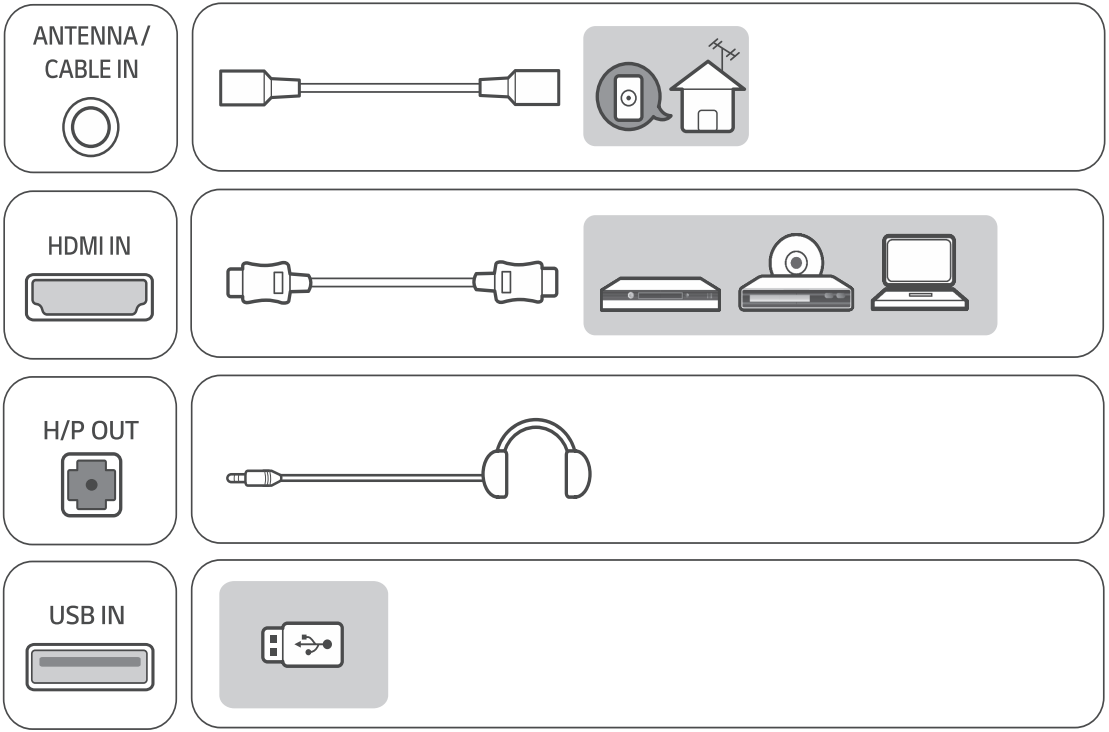

NOTE

Image shown may vary depending on model.
All connection cables & devices shown in the picture are not included along with the TV set.



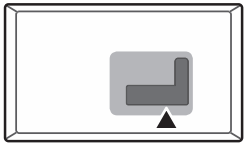

RADIO ANTENNA IN

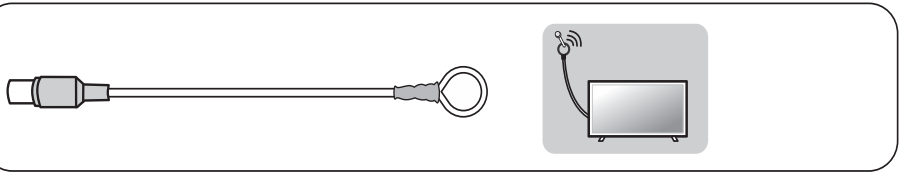

MOSQUITO AWAY

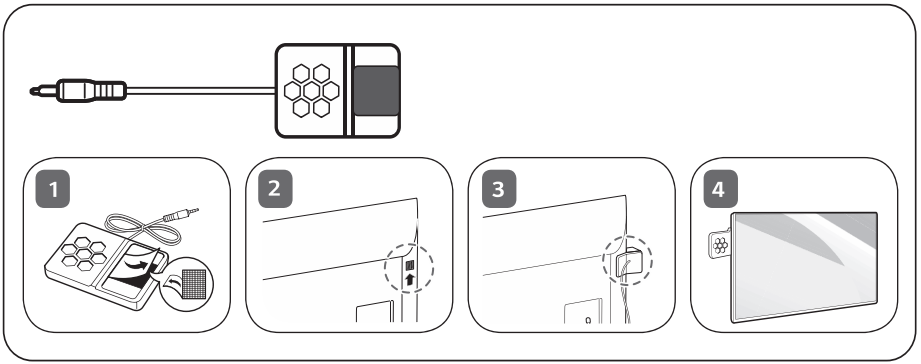

NOTE

Image shown may vary depending on model.
All connection cables & devices shown in the picture are not included along with the TV set.

: Depending on model



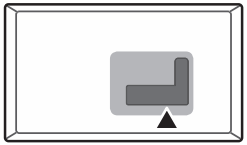

NOTE

Image shown may vary depending on model. All connection cables & devices shown in the picture are not included along with the TV set.

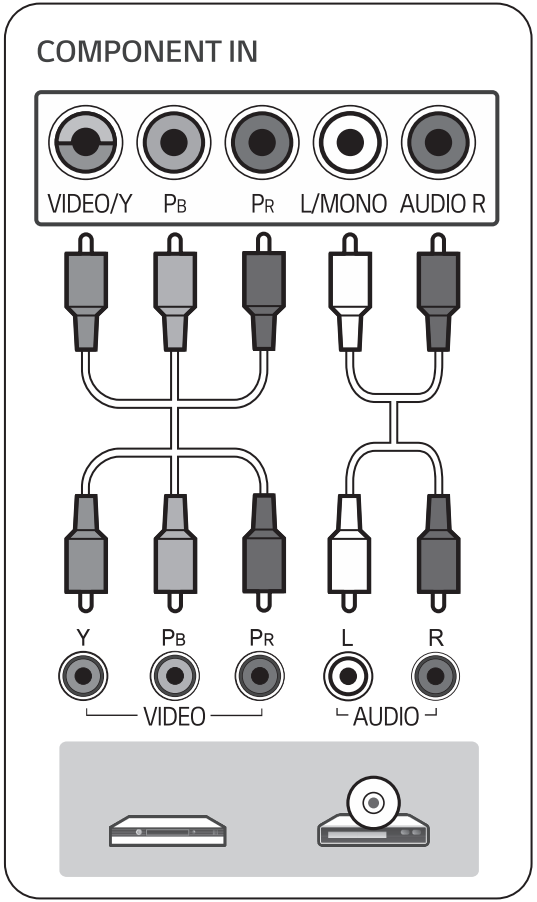

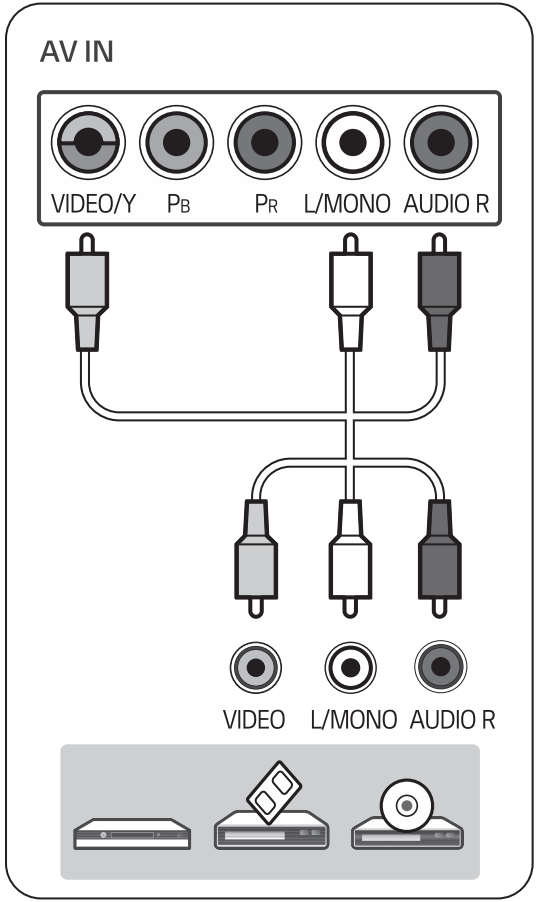

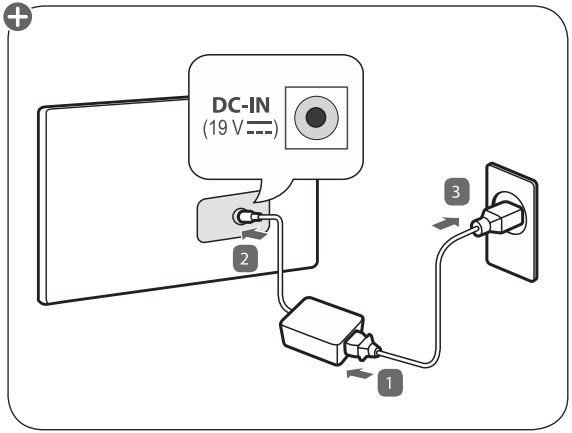

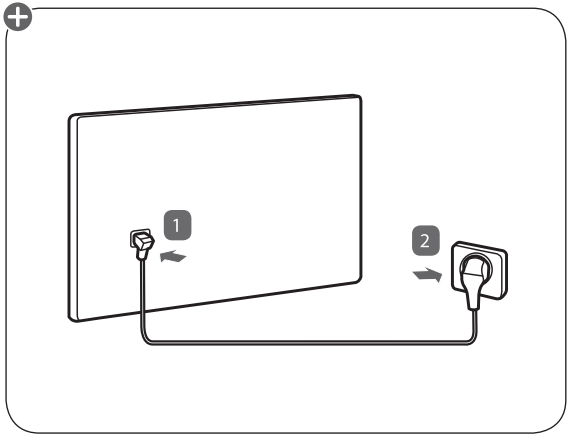

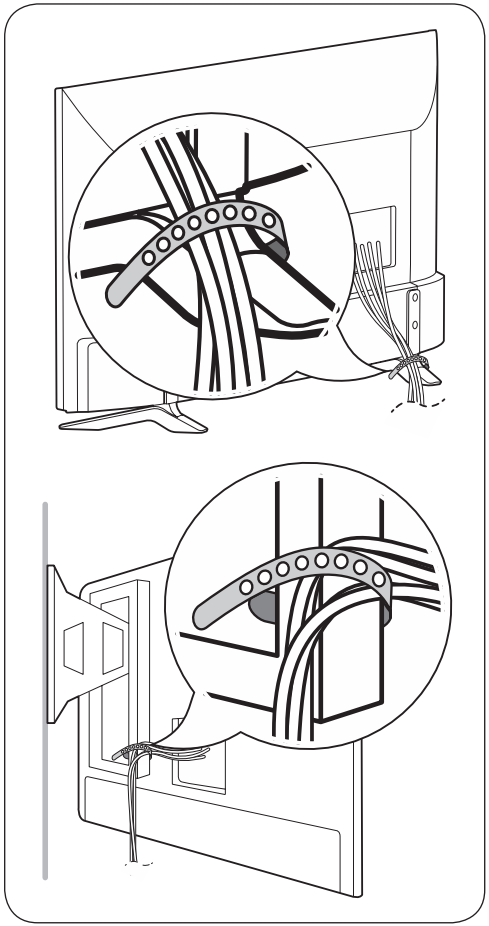

NOTE

Image shown may vary depending on model.

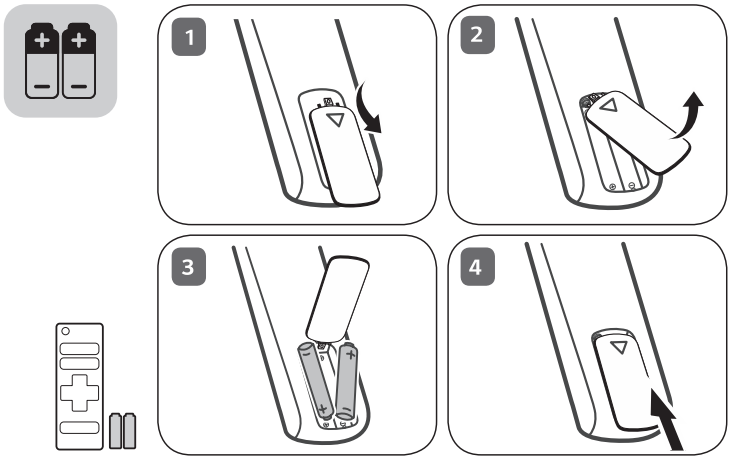

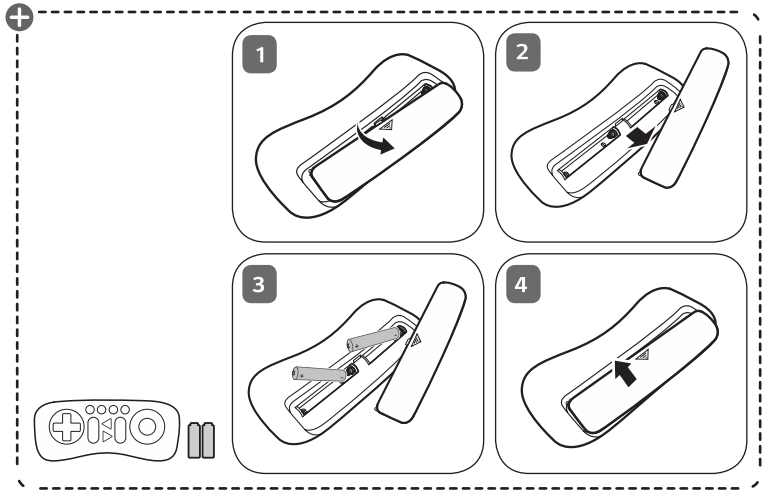

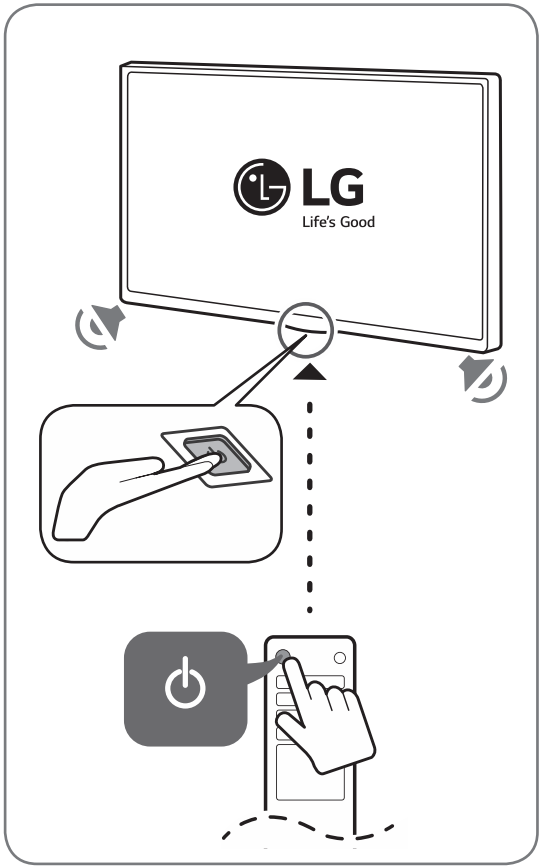

NOTE
Image shown may vary depending on model.

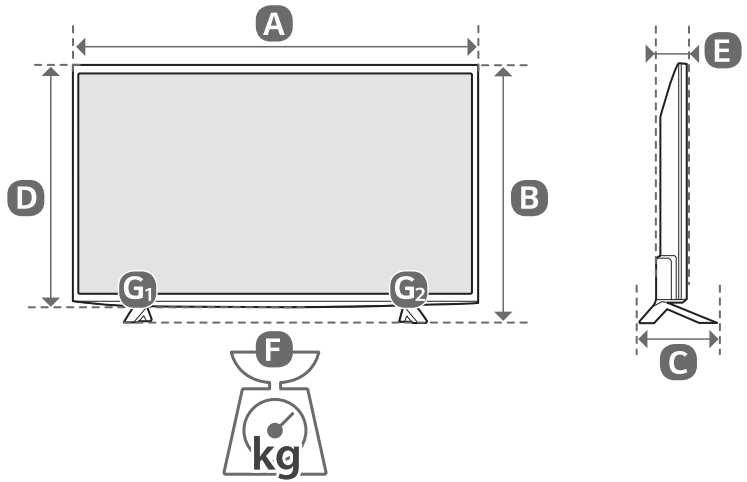

	A (mm)	B (mm)	C (mm)	D (mm)	E (mm)	F (kg)	F -(G1 + G2) (kg)
32LJ522D-TA 32LJ523D-TA 32LJ525D-TA	734	474	172	438	71	5.0	4.8
Power requirement					19 V ⎓ 2.5 A		

NOTE

Image shown may vary depending on model.

	A (mm)	B (mm)	C (mm)	D (mm)	E (mm)	F (kg)	F -(G1 + G2) (kg)
43LJ522T-TB 43LJ523T-TB 43LJ525T-TB	976	621	208.7	583	81.5	8.4	8.1
Power requirement					19 V ⎓ 2.7 A		
49LJ523T-TB	1108	696	208.7	657	81.5	11.6	11.3
Power requirement					AC 100-240 V ~ 50 / 60 Hz		
49LJ527T-TC	1108	696	208.7	657	81.5	10.9	10.6
Power requirement					19 V ⎓ 3.2 A		

MFL69446167

IN020222