LG
Life's Good

MFL71949466230 1REV00

UR75*

www.lg.com

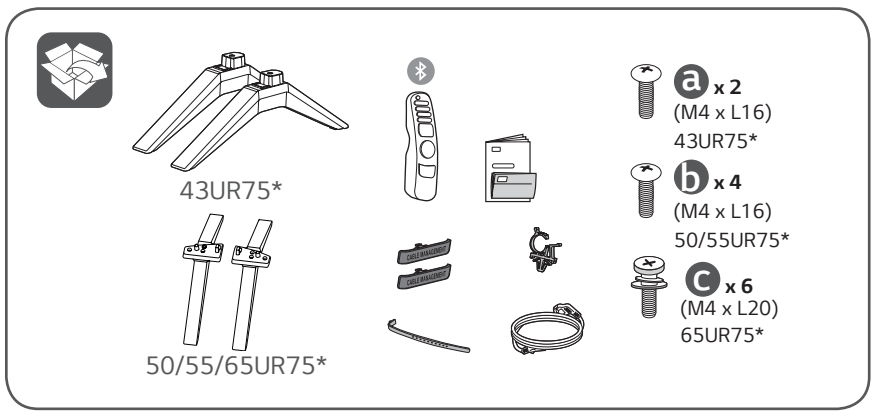

43/50/55UR75*

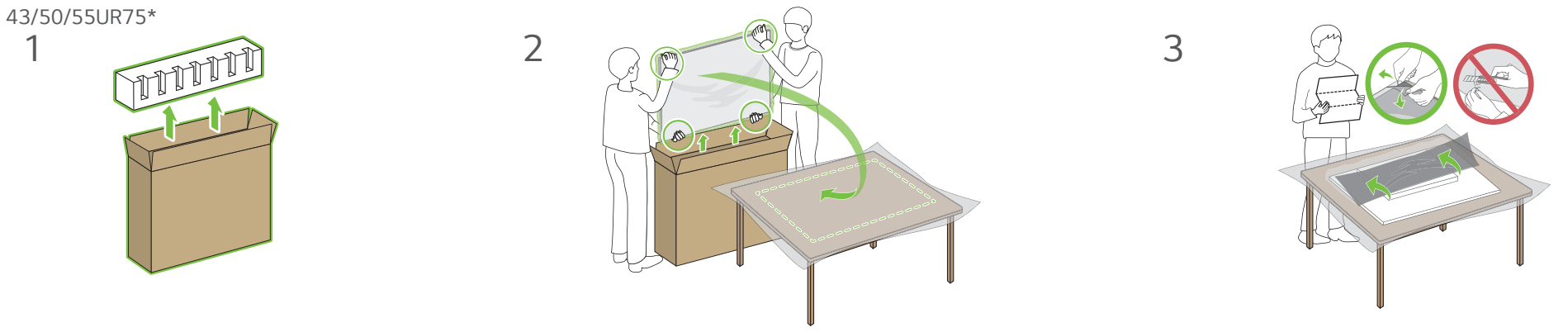

65UR75*

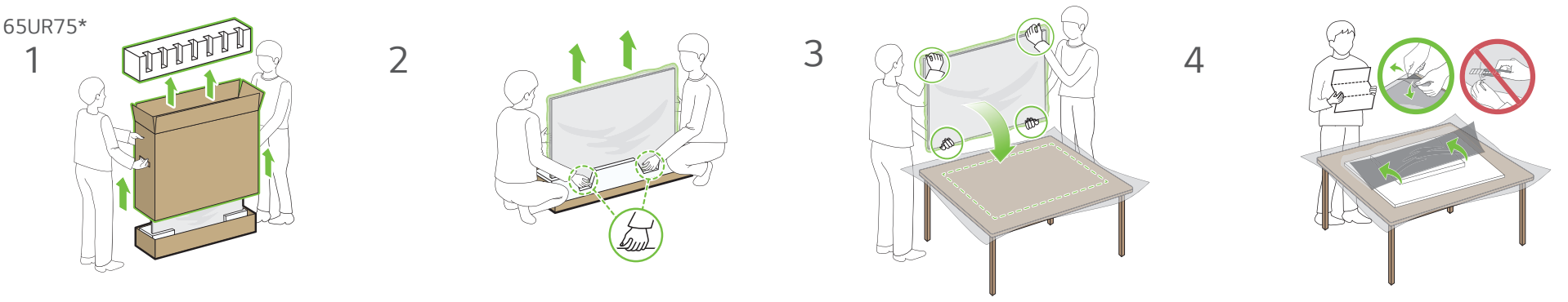

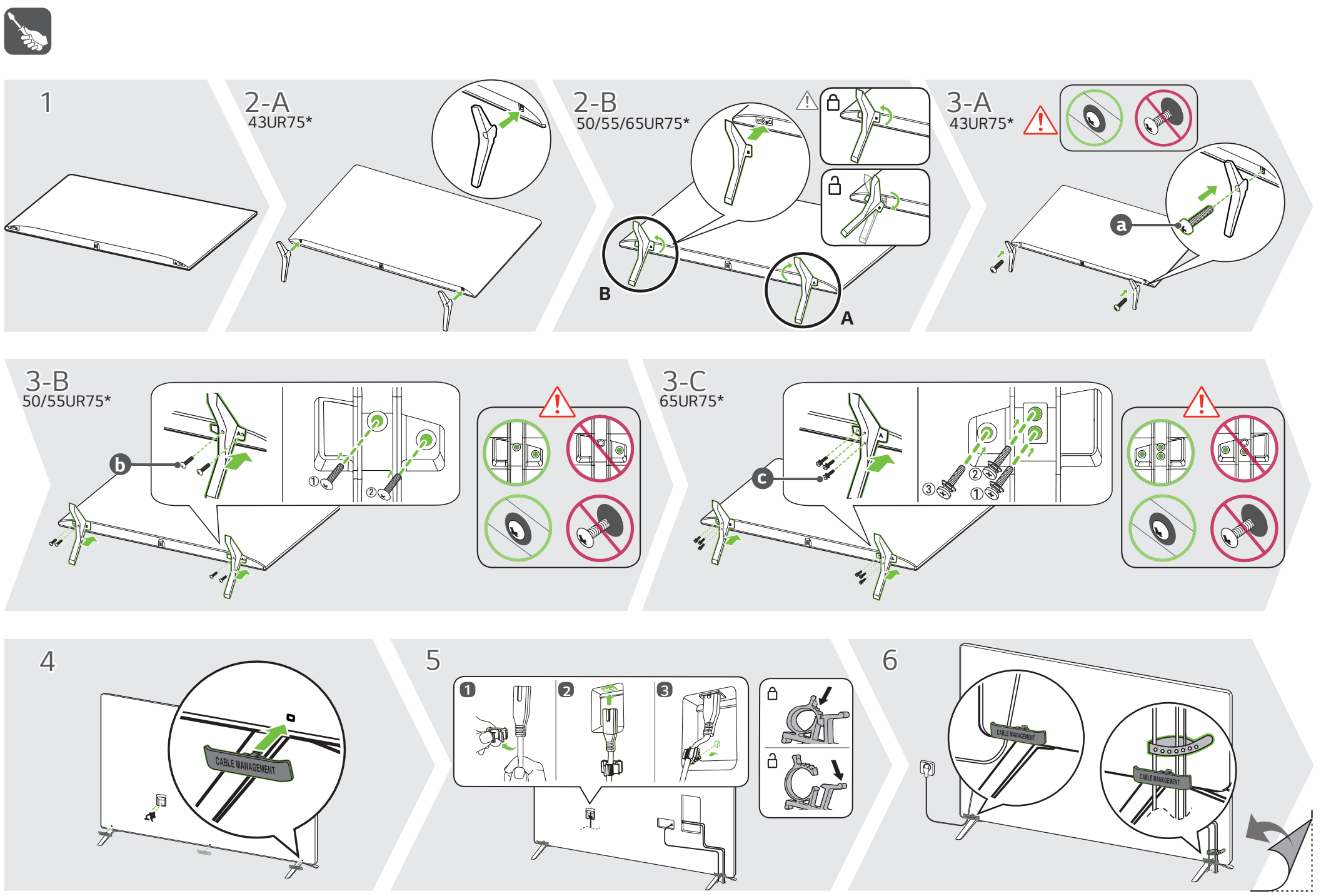

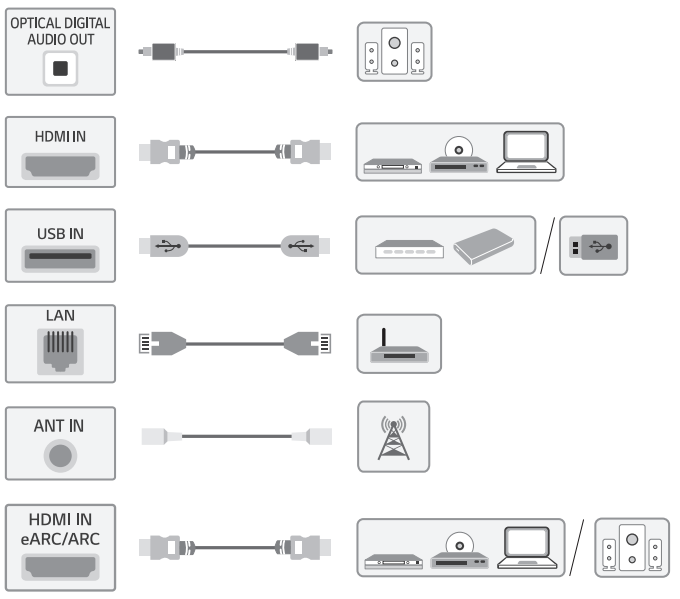

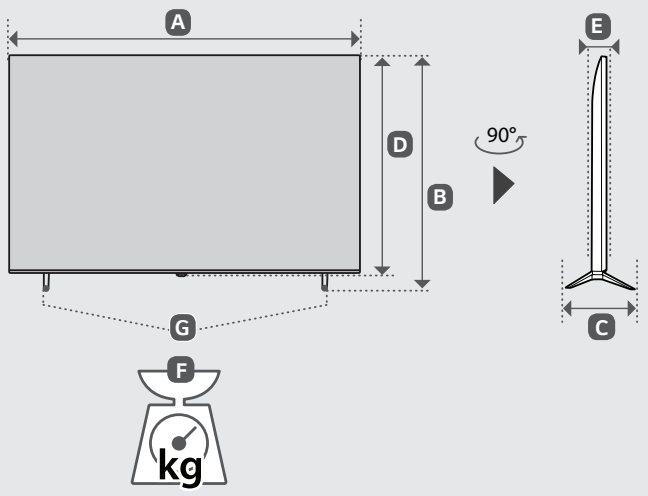

	A	B	C	D	E	F	F - G
	(mm)					(kg)	
43UR7550PSC	967	621	200	564	57.1	8.9	8.8
50UR7550PSC	1121	716	230	651	57.1	11.8	11.7
55UR7550PSC	1235	780	230	715	57.5	14.1	14.0
65UR7550PSC	1454	903	269	838	57.7	21.6	21.4

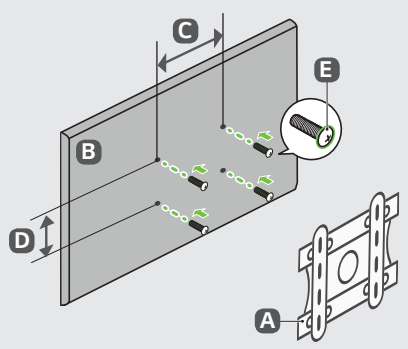

A	B	C x D (mm)	E
LSW240B MSW240	43/50UR75*	200 x 200	M6
OLW480B MSW240	55UR75*	300 x 300	M6
OLW480B	65UR75*	300 x 300	M6

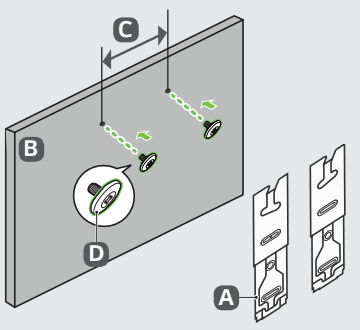
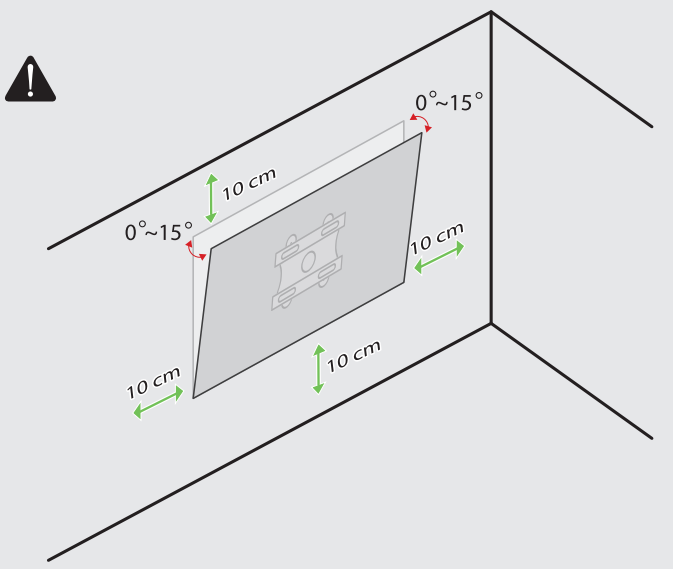
A	B	C (mm)	D
WB21LMB	43/50UR75*	200	M6
	55/65UR75*	300