LG
Life's Good

ENGLISH

العربية

INSTALLATION MANUAL

AIR CONDITIONER

Please read this installation manual completely before installing the product.
Installation work must be performed in accordance with the national wiring standards by authorized personnel only.
Please retain this installation manual for future reference after reading it thoroughly.

Floor standing

MFL67040414
Rev.03_070819

www.lg.com

Copyright © 2015 - 2019 LG Electronics Inc. All Rights Reserved.

TIPS FOR SAVING ENERGY

Here are some tips that will help you minimize the power consumption when you use the air conditioner. You can use your air conditioner more efficiently by referring to the instructions below:

- Do not cool excessively indoors. This may be harmful for your health and may consume more electricity.
- Block sunlight with blinds or curtains while you are operating the air conditioner.
- Keep doors and windows closed tightly while you are operating the air conditioner.
- Adjust the direction of the air flow vertically or horizontally to circulate indoor air.
- Speed up the fan to cool or warm indoor air quickly, in a short period of time.
- Clean the air filter once every 2 weeks. Dust and impurities collected in the air filter may block the air flow or weaken the cooling / dehumidifying functions.

For your records

Staple your receipt to this page in case you need it to prove the date of purchase or for warranty purposes. Write the model number and the serial number here:

Model number : _____

Serial number : _____

You can find them on a label on the side of each unit.

Dealer's name : _____

Date of purchase : _____

IMPORTANT SAFETY INSTRUCTIONS

READ ALL INSTRUCTIONS BEFORE USING THE APPLIANCE.

Always comply with the following precautions to avoid dangerous situations and ensure peak performance of your product.

⚠ WARNING

It can result in serious injury or death when the directions are ignored.

⚠ CAUTION

It can result in minor injury or product damage when the directions are ignored.

⚠ WARNING

- Installation or repairs by unqualified persons can result in hazards to you and others.
- The information contained in the manual is intended for use by a qualified service technician familiar with safety procedures and equipped with the proper tools and test instruments.
- Failure to carefully read and follow all instructions in this manual can result in equipment malfunction, property damage, personal injury and/or death.

Installation

- Always perform grounding.
  - Otherwise, it may cause electric shock.
- Don't use an electric cable or a terminal block which is damaged.
  - Otherwise, it may cause a fire or electric shock.
- For installation of the product, always contact the service center or a professional installation agency.
  - Otherwise, it may cause a fire, electric shock, explosion or injury.
- Securely attach the electrical part cover to the indoor unit and the service panel to the outdoor unit.
  - If the electrical part cover of the indoor unit and the service panel of the outdoor unit are not attached securely, it could result in a fire or electric shock due to dust, water, etc.
- Always install an earth leakage breaker and a dedicated switching board.
  - No installation may cause a fire and electric shock.
- Do not keep or use flammable gases or combustibles near the air conditioner.
  - Otherwise, it may cause a fire or the failure of product.
- Ensure that an installation frame of the outdoor unit is not damaged due to use for a long time.
  - It may cause injury or an accident.
- Do not disassemble or repair the product randomly.
  - It will cause a fire or electric shock.
- Do not install the product at a place that there is concern of falling down.
  - Otherwise, it may result in personal injury.
- Do not turn on the breaker or power under condition that front panel, cabinet, top cover, control box cover are removed or opened.
  - Otherwise, it may cause fire, electric shock, explosion or death.

Operation

- Do not share the outlet with other appliances.
  - It will cause an electric shock or a fire due to heat generation.
- Do not use the damaged electric cable.
  - Otherwise, it may cause a fire or electric shock.
- Do not modify or extend the electric cable randomly.
  - Otherwise, it may cause a fire or electric shock.
- Turn off the breaker or power if strange sounds, smell, or smoke comes from it.
  - Otherwise, it may cause electric shock or a fire.
- Keep the flames away.
  - Otherwise, it may cause a fire.
- Do not use the electric cable near the heating tools.
  - Otherwise, it may cause a fire and electric shock.
- Do not open the suction inlet of the indoor/outdoor unit during operation.
  - Otherwise, it may electric shock and failure.
- Do not allow water to run into electrical parts.
  - Otherwise, it may cause the failure of machine or electric shock.
- Hold the plug by the head when taking it out.
  - It may cause electric shock and damage.
- Never touch the metal parts of the unit when removing the filter.
  - They are sharp and may cause injury.
- Do not step on the indoor/outdoor unit and do not put anything on it.
  - It may cause an injury through dropping of the unit or falling down.
- Do not place a heavy object on the electric cable.
  - Otherwise, it may cause a fire or electric shock.
- When the product is submerged into water, always contact the service center.
  - Otherwise, it may cause a fire or electric shock.
- Take care so that children may not step on the outdoor unit.
  - Otherwise, children may be seriously injured due to falling down.

⚠ CAUTION

Installation

- Install the drain hose to ensure that drain can be securely done.
  - Otherwise, it may cause water leakage.
- Install the product so that the noise or hot wind from the outdoor unit may not cause any damage to the neighbors.
  - Otherwise, it may cause dispute with the neighbors.
- Always inspect gas leakage after the installation and repair of product.
  - Otherwise, it may cause the failure of product.
- Keep level parallel in installing the product.
  - Otherwise, it may cause vibration or water leakage.
- For installation of the product, do not use the pipe less than 5m
  - Otherwise, it may cause damage of compressor and to form dewdrop on the indoor unit.
  - Also, it may cause to decrease capacity.
- Use caution when unpacking and installing.
  - Sharp edges may cause injury.

Operation

- Avoid excessive cooling and perform ventilation sometimes.
  - Otherwise, it may do harm to your health.
- Use a soft cloth to clean. Do not use wax, thinner, or a strong detergent.
  - The appearance of the air conditioner may deteriorate, change color, or develop surface flaws.
- Do not use an appliance for special purposes such as preserving animals vegetables, precision machine, or art articles.
  - Otherwise, it may damage your properties.
- Do not place obstacles around the flow inlet or outlet.
  - Otherwise, it may cause the failure of appliance or an accident.

ENGLISH

TABLE OF CONTENTS

2 TIPS FOR SAVING ENERGY

3 IMPORTANT SAFETY INSTRUCTIONS

7 INSTALLATION PLACE

7 Select the best Location

8 INSTALLATION

8 Indoor unit installation

9 Precautions in bending

10 WIRING CONNECTION

10 Connecting the cable

11 LEAKAGE TEST AND EVACUATION

11 Vacuum drying of the connecting pipes and the indoor unit

12 FINAL CHECK AND TEST RUN

13 CONVENIENT FUNCTIONS

13 Child Lock Operation Function

13 Auto Dry Function

14 Desired airflow direction memory function

14 Auto restart operation

15 Installer Setting-Group Setting

INSTALLATION PLACE

Select the best Location

Indoor unit

- There should not be any heat source or steam near the unit.
- There should not be any obstacles to prevent the air circulation.
- A place where air circulation in the room will be good.
- A place where drainage can be easily obtained.
- A place where noise prevention is taken into consideration.
- Do not install the unit near the door way.
- Ensure the spaces indicated by arrows from the wall, ceiling, or other obstacles.
- The indoor unit must keep the maintenance space.

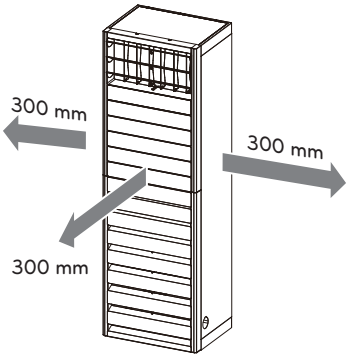

INSTALLATION

Indoor unit installation

1 The mounting floor should be strong and solid enough to prevent it from vibration.

2 Drill the piping hole with 65 mm diameter hole-core drill at either the right or the left of indoor unit. The hole should be sightly slant to the outdoor side.

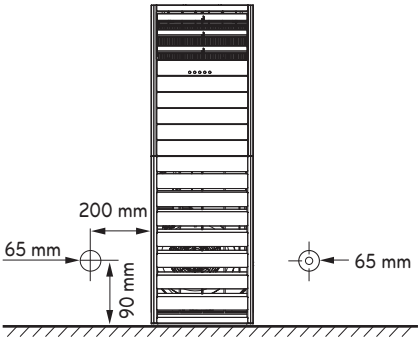

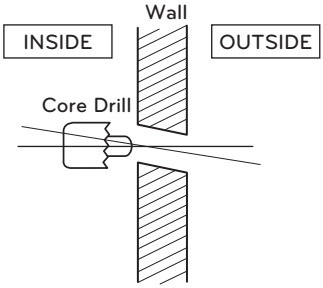

3 Insert the plastic tube through the hole.

4 Cut the extruded outside part of the plastic tube, if necessary.

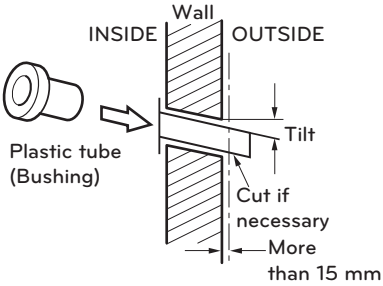

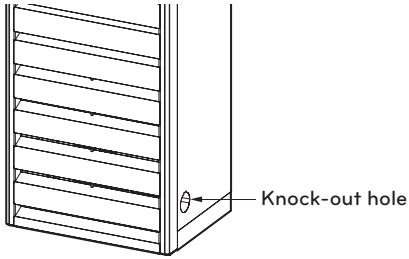

- When using knock-out hole to route the piping, insert the plastic cover in knock-out hole in order to prevent the piping from damaged by sharp edge of the hole.

Precautions in bending

1 If it is necessary to bend or stretch the tubing, use the spring which is attached to the tubing instead of pipe bender.
   - Please make a careful notice to make a smooth line.
   - Hold the tubing with your two hands closely and then bend or stretch it slowly not to make any crack.
   - Remember that the radius (R) should exceed 70 mm (Refer to Fig. 1).
2 Do not repeat the bending process to prevent the tubing from cracking or crushing.
3 Keep in mind that the bending part should not be cracked and make the radius (R) as long as possible (Refer to Fig. 2).

(Fig. 1)

(Fig. 2)

WIRING CONNECTION

Connecting the cable

Indoor unit

* The inside and outside connecting cable can be connected after opening the inlet grille.

1 Open the inlet grille manually.

2 Open the control cover with screwdriver(⊕).

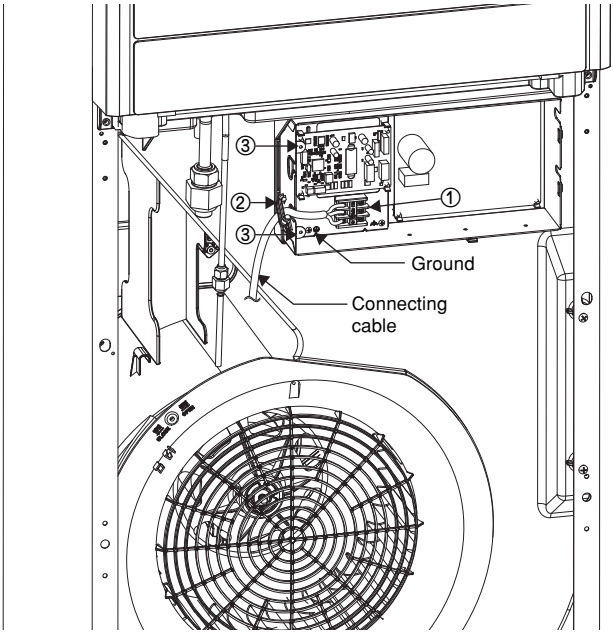

3 Connect the cables to the terminal block(①) in the control box.
And fix the cable to cord clamp(②). Close the plastic cover of terminal block(①).

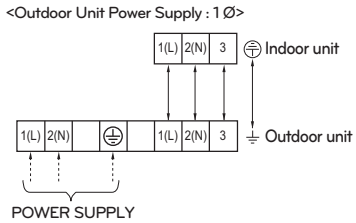

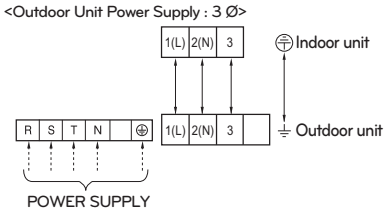

4 Secure the control cover to the original position with the screw(③).

5 Close the inlet grille.

LEAKAGE TEST AND EVACUATION

Vacuum drying of the connecting pipes and the indoor unit

The air which contains moisture remaining in the refrigeration cycle may cause a malfunction on the compressor.

1 Confirm that both the liquid side valve and the gas side valve are set to the closed position.

2 After connecting the piping, check the joints for gas leakage with gas leak detector.

3 Remove the service port nut, and connect the gauge manifold and the vacuum pump to the service port by the charge hose.

4 Vacuum the indoor unit and the connecting pipes until the pressure in them lowers to below 0.8 Torr by the vacuum pump.

5 Remove the valve stem nuts, and fully open the stems of the 2-way and 3-way valves with a hexagon wrench.

6 Tighten the valve stem nuts of the 2-way valve and 3-way valve.

7 Disconnect the charge hose and fit the nut to the service port.
(Tightening torque: 1.8 kgf·m)

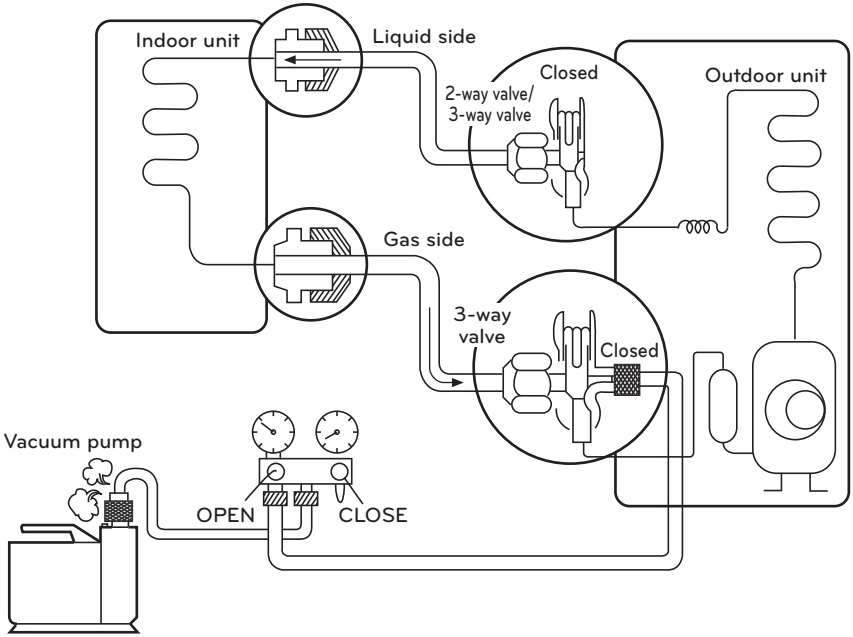

FINAL CHECK AND TEST RUN

A test run allows you to check if the product has been properly installed before operating the product.

Hold down the Power button and Temp. down button on the indoor unit simultaneously for 3 seconds. “Lo” appears on the display screen, and the product performs a test run for 18 minutes.

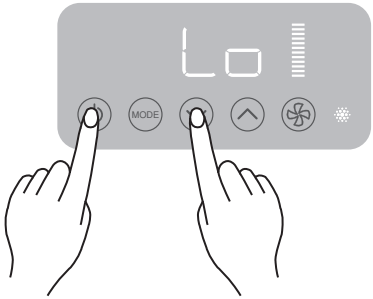

Final check points during Test Run

1 Is the unit securely mounted?
2 Is the installation location adequate?
3 Does the water piping work adequately and without leakage?
4 Are trapped drain lines installed at condensated drain connections?
5 Has the refrigeration cooling cycle been kept sealed?
6 Is the electrical wiring adequate and are the screws tightened on terminals?
7 Does the remote control work properly?
8 Does the display on the indoor unit work properly?
9 Do you hear any abnormal noises?
10 Does the heating/cooling work properly?
11 Does the water drain properly?

CONVENIENT FUNCTIONS

Child Lock Operation Function

1 Press the fan speed button and high temperature setting buttons simultaneously for 3 seconds. Or press the button on remote control.

2 During child lock operation,
- Whenever you press any button on display panel, it will immediately display "CL", which means display panel is locked.
- All the button on the indoor unit display panel will not work.
- But the button on the remote controller will be operated.

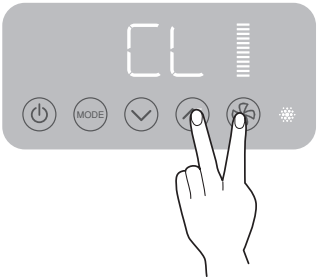

3 Press the fan speed button and high temperature setting buttons simultaneously for 3 seconds again. The unit will respond with beep. child lock operation will removed.

Auto Dry Function

1 Auto dry function can be setted/released by manipulating indoor unit button or remote control.

2 When pressing the button after setting the function, evaporator in indoor unit will be automatically dried as showing counting 00 to 99 on its display panel.

3 After indicating 99 on the display panel, the unit will be automatically turned off.

* Auto dry function is released at initial state as standard.

For Setting Auto Dry Function

If manipulating indoor unit, press the button and MODE button simultaneously for 3 seconds.
If manipulating remote control for Cooling Only model, press button.
The indoor unit will respond with beep once and indicate “SC” on its display panel. Then Auto dry function will be set.

For Releasing Auto Dry Function

If manipulating indoor unit, press the button and MODE button simultaneously for 3 seconds.
If manipulating remote control for Cooling Only model, press button.
The indoor unit will respond with beep twice and Auto dry function will be removed.

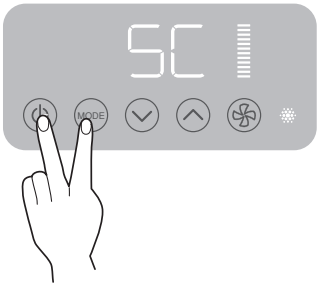

Desired airflow direction memory function

(Up/down louver only)

You can register a discharge angle in the product by turning off the Auto Swing function at the desired angle.

For setting desired airflow direction memory function

Press the Mode button and Temp. down button on the indoor unit simultaneously for 3 seconds. to register the discharge angle.

For releasing desired airflow direction memory function

- Switch from the mode in which the Auto Swing angle was registered to another mode to clear the registered angle.
- Change the vane angle by setting another function, such as Power Cooling Operation, to clear the registered angle.

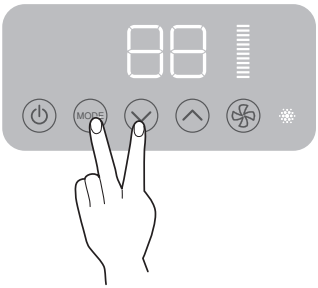

Auto restart operation

When power is supplied again after unit operation has been stopped because of interruption of power supply due to outage or other causes, auto restart will be performed by remembering previous setting.

- When power is supplied, outdoor unit operation will be started within 3 minutes.

1 Auto restart operation can be established/released by manipulating indoor unit button.

   * When initial state, Auto restart operation will be set up as standard.

For releasing restart function

Press the on/off, fan speed, high temp and low temp buttons (4 buttons) simultaneously for 3 seconds.

The unit will respond with beep and restart operation will be removed.

For setting restart function

After funtion release, Press the on/off, fan speed, high temp and low temp buttons (4 buttons) simultaneously for 3 seconds.

The unit will respond with beep and restart operation will be setted.

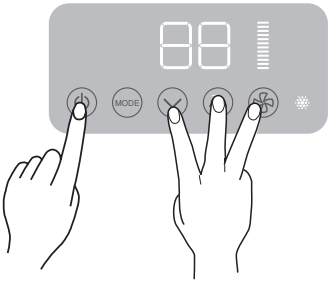

Installer Setting-Group Setting

This function is the settings when controlling group control.

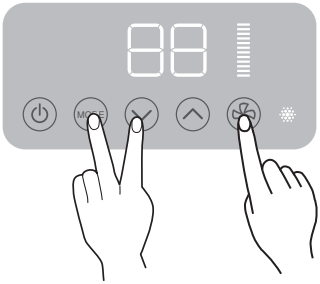

1 Press the (MODE), (∨), (⊛) (3 buttons) simultaneously for 3 seconds.

- The indoor unit will respond with beep once and indicate "SL" on its display panel. Then Slave will be set.

2 One more press the (MODE), (∨), (⊛) (3 buttons) simultaneously for 3 seconds.

- The indoor unit will respond with beep twice. Then Master will be set.

NOTE

- Set as a master by default
- Some functions may not be available during a group control except basic operation settings
- Some functions may not be supported, depending on the model.