LG

MFL05813105251 2REV00

OLED42C6* **OLED65C6***
OLED48C6* **OLED77C6***
OLED55C6* **OLED83C6***





www.lg.com PDF

x 1

42”



55/65/77”

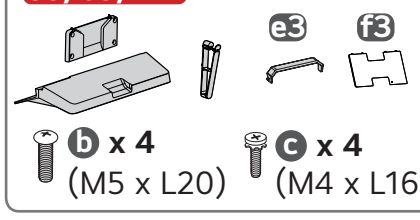

48”

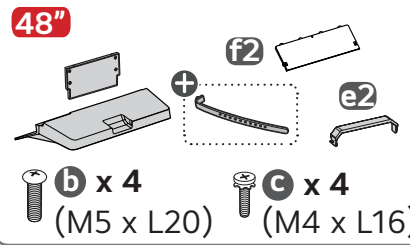

83”

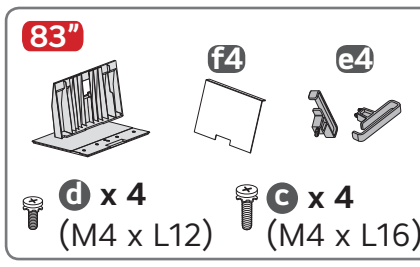

42/48”

1

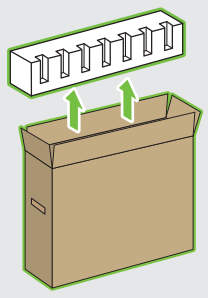

55/65/77”

1

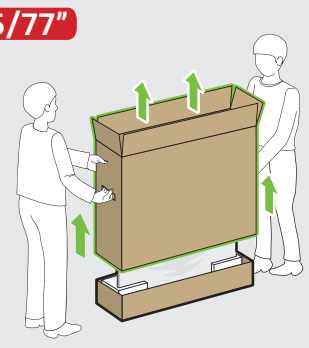

42/48/55/65/77”

2



83”

1

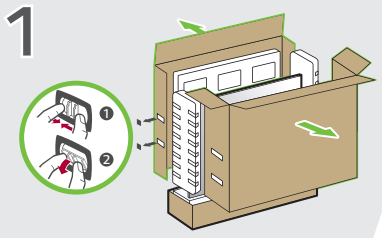

2

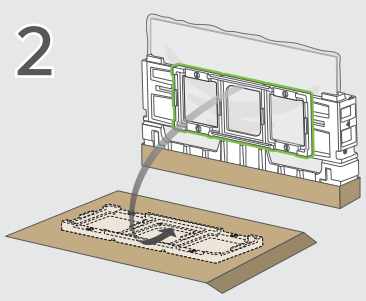

3

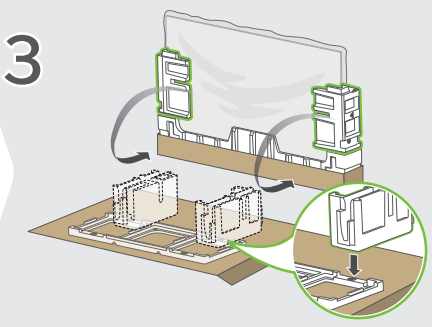

4

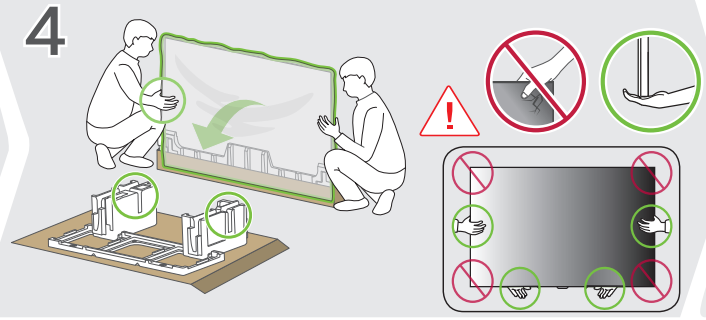

5

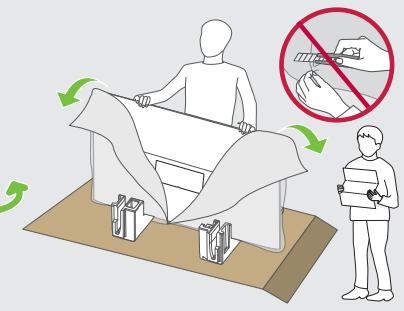

42”

1

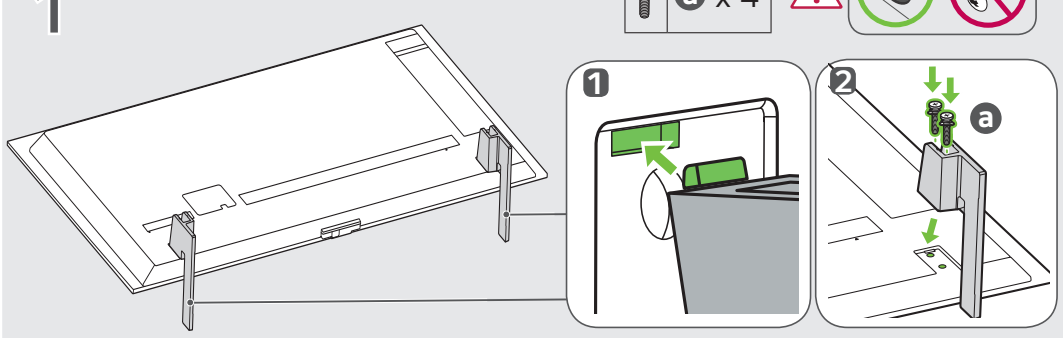

2

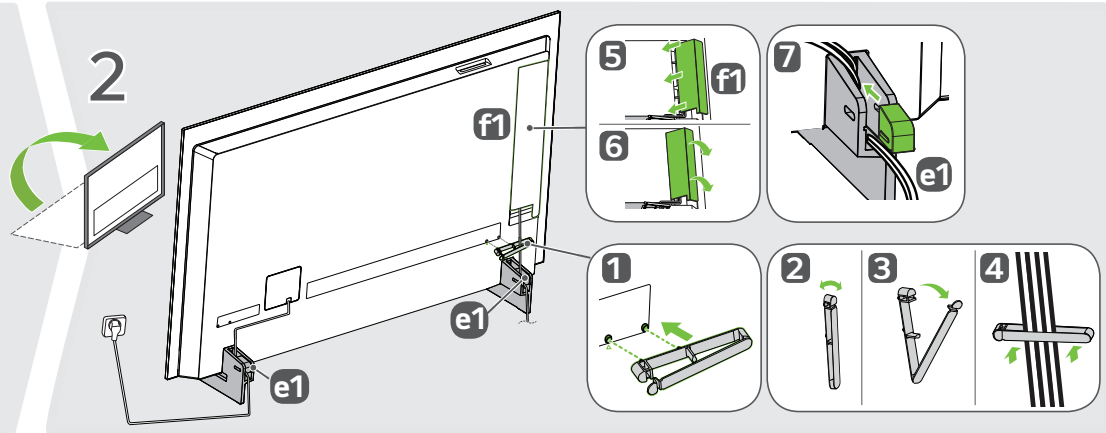

48”

1

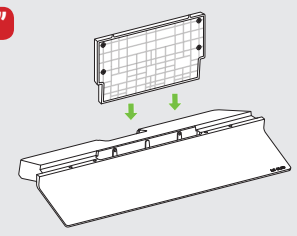

55/65/77”

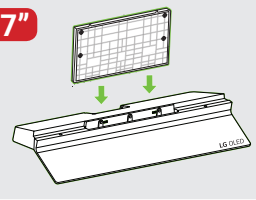

2

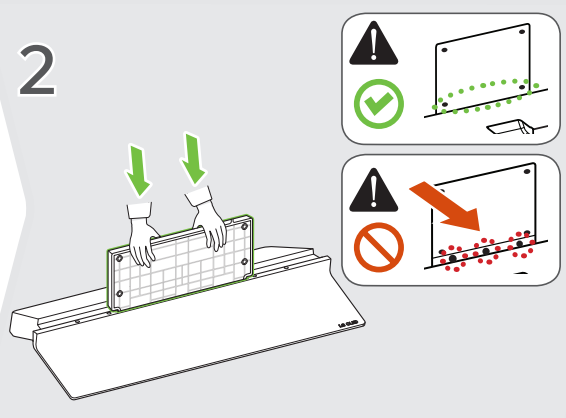

3

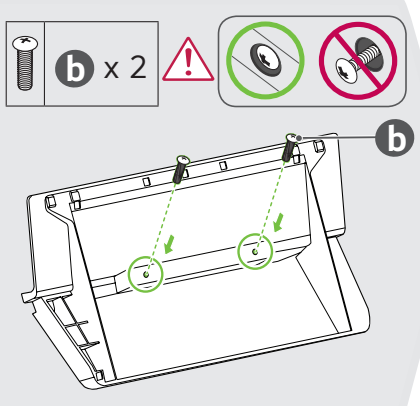

4

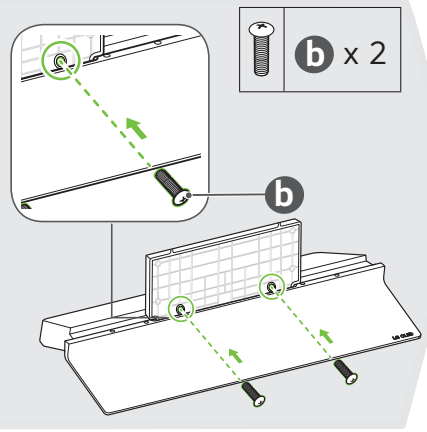

48”

5

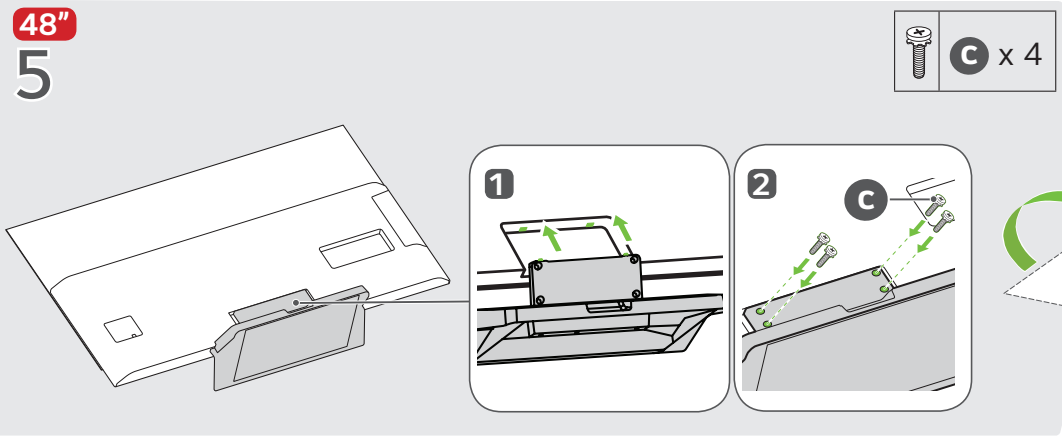

6

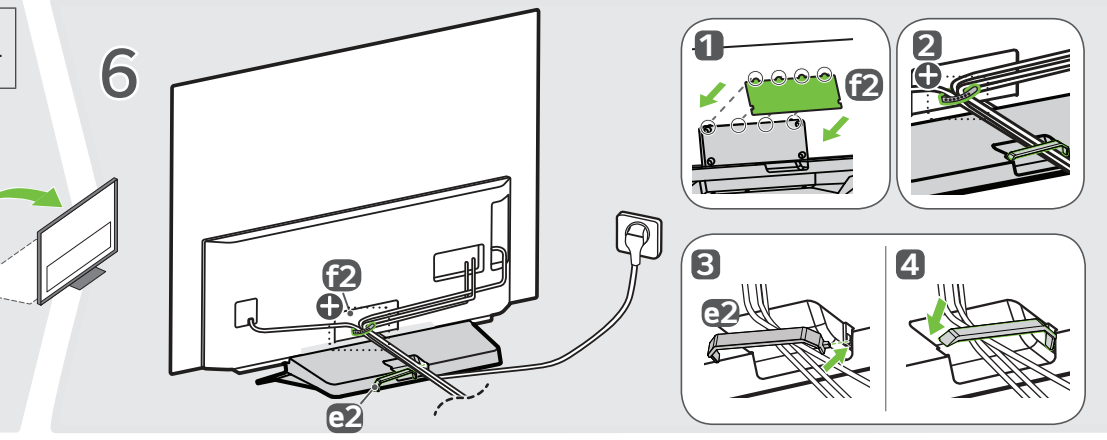

55/65/77”

5

c x 4

6

83”

1

d x 4

2

F

88 mm
(3.4 Inches)

F’

40 mm
(1.5 Inches)

c x 4

3

4

42/48/55/65/77/83”

Émetteur à infrarouge

IR Blaster

ANT

SORTIE AUDIO NUMÉRIQUE OPTIQUE

OPTICAL DIGITAL AUDIO

LAN

HDMI

HDMI eARC/ARC

USB

CI+

COMMON INTERFACE

SORTIE POUR CASQUE D’ÉCOUTE/AUDIO

AUDIO/H/P

	mm (inches / pulgadas / po / pol.)								kg (lbs / libras / lb)	
	A	B	B’	C	D	E	F	F’	G	G - H
OLED42C6*	932 (36.6)	577 (22.7)	-	170 (6.6)	540 (21.2)	41.1 (1.6)	37 (1.4)	-	10.1 (22.2)	9.8 (21.6)
OLED48C6*	1 071 (42.1)	675 (26.5)	-	230 (9.0)	620 (24.4)	46.9 (1.8)	55 (2.1)	-	16.7 (36.8)	14.9 (32.8)
OLED55C6*	1 222 (48.1)	757 (29.8)	-	230 (9.0)	703 (27.6)	45.1 (1.7)	54 (2.1)	-	15.9 (35.0)	14.1 (31.0)
OLED65C6*	1 441 (56.7)	880 (34.6)	-	230 (9.0)	826 (32.5)	45.1 (1.7)	54 (2.1)	-	18.4 (40.5)	16.6 (36.5)
OLED77C6*	1 711 (67.3)	1 035 (40.7)	-	267 (10.5)	982 (38.6)	47.1 (1.8)	53 (2.0)	-	27.0 (59.5)	23.5 (51.8)
OLED83C6*	1 842 (72.5)	1 144 (45.0)	1 096 (43.1)	297 (11.6)	1 055 (41.5)	52.9 (2.0)	88 (3.4)	40 (1.5)	33.0 (72.7)	28.3 (62.3)

A	B	E	mm (inches / pulgadas / po / pol.)			
			C x D	F	G	H
OLW480B	**OLED42C6***	M6	300 x 200 (11.8 x 7.8)	263 (10.3)	≧1.5 m (59.0) inches	113 (4.4)
	OLED48C6*			126 (4.9)		118 (4.6)
	OLED55C6*			523 (20.5)		121 (4.7)
	OLED65C6*			633 (24.9)		121 (4.7)
	OLED77C6*			769 (30.2)		121 (4.7)
WB24GCB	**OLED83C6***		400 x 400 (15.7 x 15.7)	896 (35.2)		114 (4.4)

mm (inches / pulgadas / po / pol.)

A	B	C x D
WB21EB	**OLED83C6***	180 x 55 (7.0 x 2.1)

mm (inches / pulgadas / po / pol.)

A	B	C	D
WB25LDB	**OLED55C6*** **OLED65C6*** **OLED77C6***	300 (11.8)	M6
	OLED83C6*	400 (15.7)	

* : 0~9, A~Z

Printed in Korea
Imprimé en Corée