OWNER'S MANUAL

LG Digital Signage

(MONITOR SIGNAGE)

Please read the user manual before using this product to ensure safe and convenient use.

32SM5J

www.lg.com

Copyright © 2021 LG Electronics Inc. All Rights Reserved.

TABLE OF CONTENTS

BASIC 3

- Checking the Accessories 3
- Checking the Optional Accessories.....4
- Learning the Buttons.....5

GETTING READY 6

- Connecting the IR Sensors 6
- Mounting and Removing the LG Logo Bracket 7
- Assembling the Memory Cover.....8
- Kensington Lock Device 9

CHECKING BEFORE INSTALLATION 10

- Installation Orientation 10
- Installation Location.....11
- Wall Mount Holder 12

PRECAUTIONS FOR USE..... 13

- Dust.....13
- Afterimage 13

PRODUCT SPECIFICATIONS..... 15

LICENCE..... 19

WARNING - This equipment is compliant with Class A of CISPR 32. In a residential environment this equipment may cause radio interference.

BASIC

NOTE

- The accessories provided with your product may vary depending on the model or region.
- Product specifications or contents in this manual may be changed without prior notice due to upgrade of product functions.
- SuperSign Software & Manual
  - Visit *http://partner.lge.com* to download the latest SuperSign software and manual.

Checking the Accessories

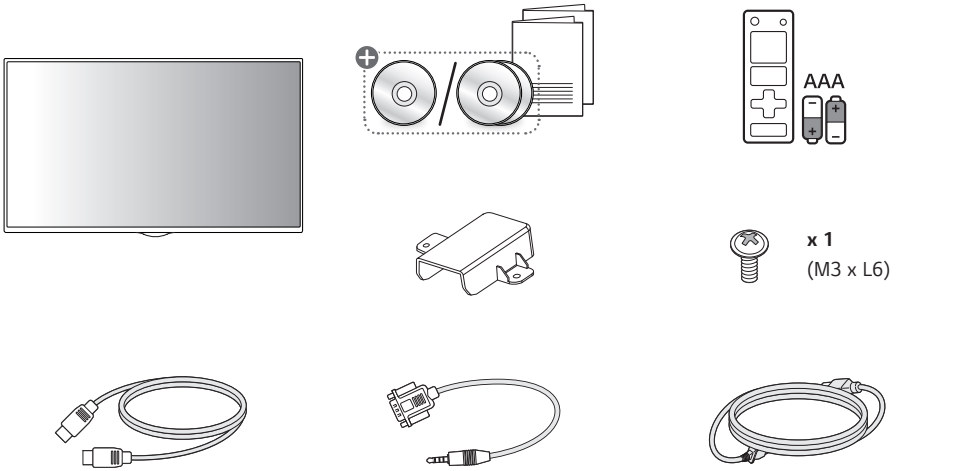

Depending on country

Checking the Optional Accessories

In order to improve product performance, optional accessories are subject to change without prior notice.
The illustrations in this manual may differ from the actual product and its accessories.
Refer to the product manual for the components of the optional accessories.

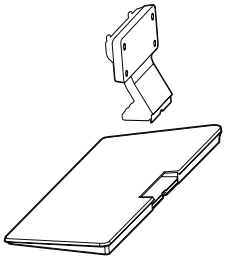

ST-322T

Learning the Buttons

The illustrations may differ depending on the model.

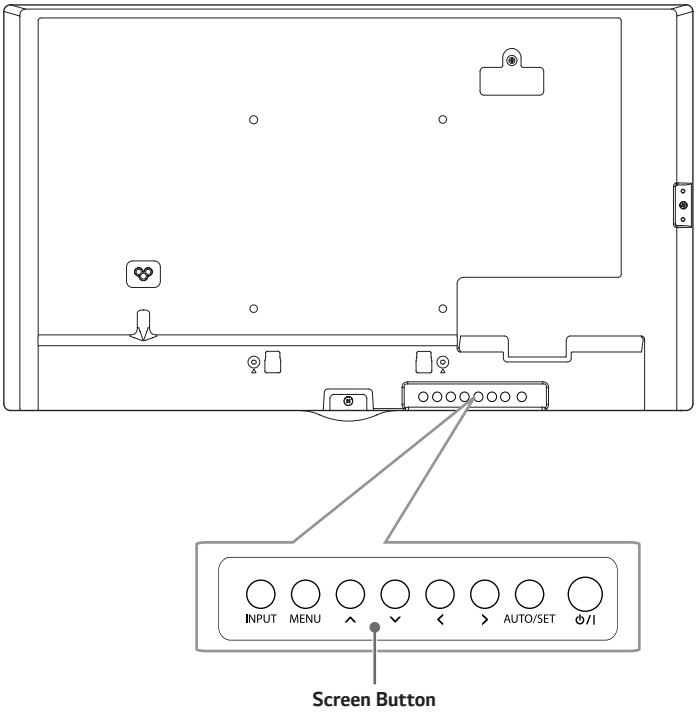

- **INPUT** : Changes the input signal.
- **MENU** : Opens the main menu or saves the input selection and exits the menu.
- ∧∨ : Adjusts up and down.
- < > : Moves left or right.
- **AUTO/SET** : Shows the signal and mode information currently set and allows the user to select a menu.
- ⏻/I : Turns the power on and off.

GETTING READY

Connecting the IR Sensors

Connecting the cable to the product allows it to receive signals from the remote control.
Rotate the IR sensor according to horizontal or vertical use.
- The illustrations may differ depending on the model.

Default Mount - Horizontal Use

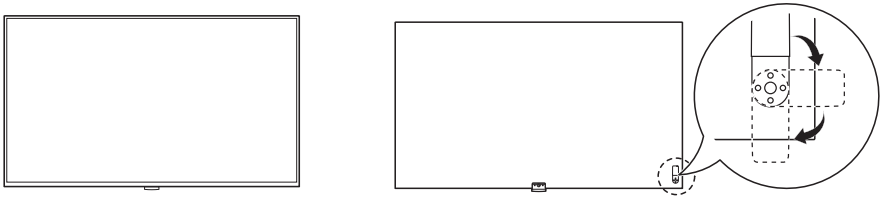

(Front) (Back)

Vertical Use

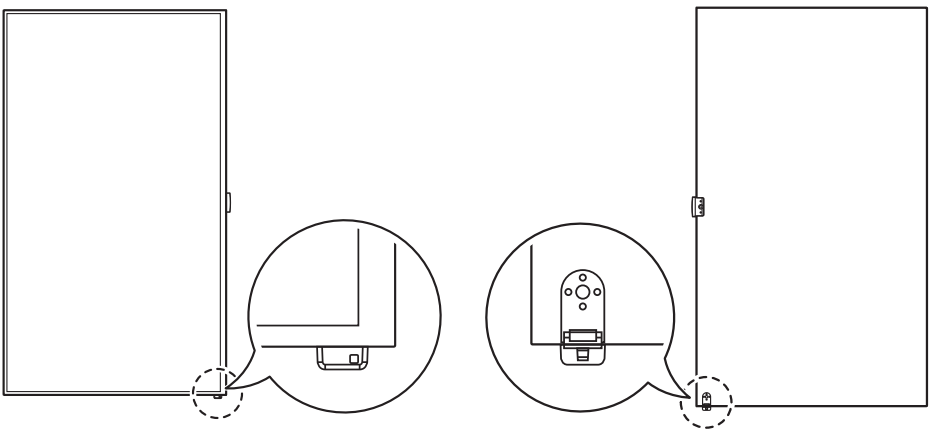

(Front) (Back)

Mounting and Removing the LG Logo Bracket

- Applies only to some models.
- The illustrations may differ depending on the model.

Removing the LG Logo Bracket

Place a clean cloth on the floor, and remove one screw from the LG logo bracket on the lower back of the monitor with a screwdriver.

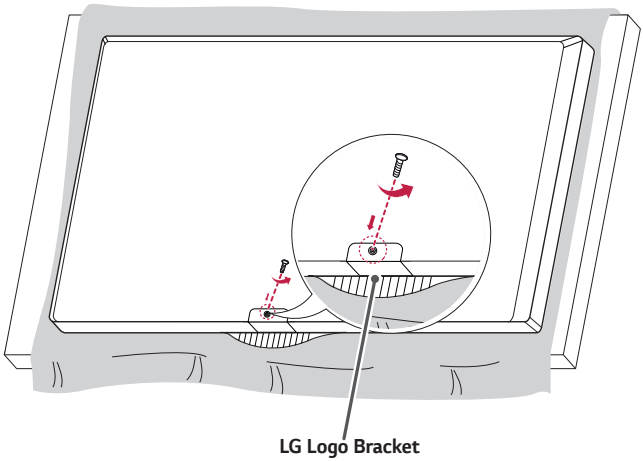

Mounting the LG Logo Bracket on the Right

Screw the LG logo bracket into the hole on the right.

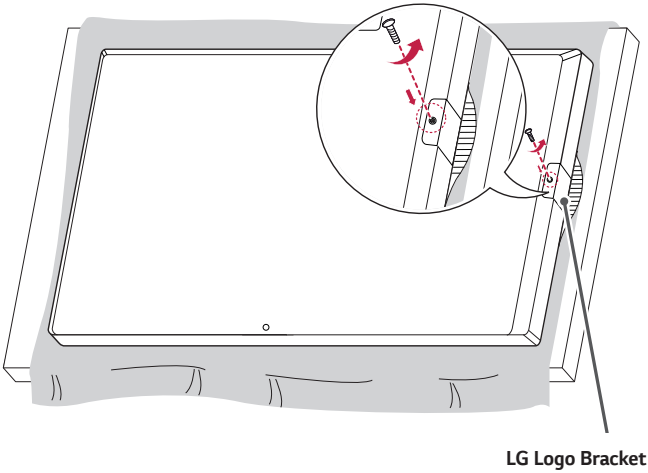

Assembling the Memory Cover

After attaching the USB memory, use a screw to assemble the cover, as shown in the illustration, to prevent theft.

1

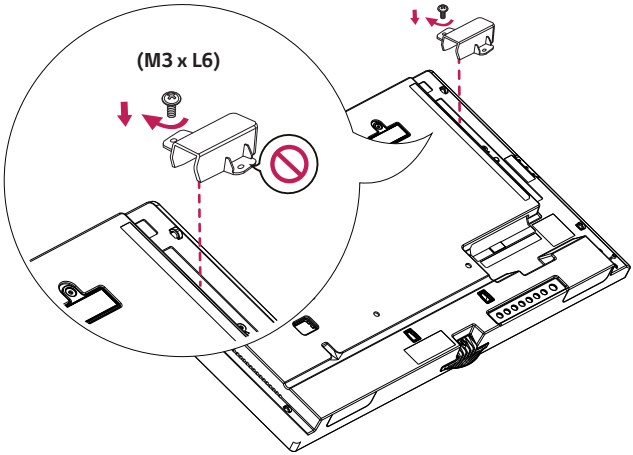

2

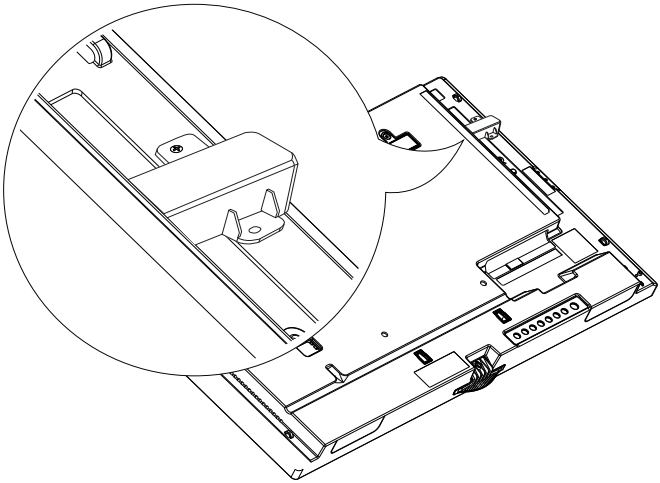

Kensington Lock Device

(This feature applies only to some models.)

The Kensington lock device connector is located on the back of the monitor. For more information on installation and use, refer to the user manual provided with the locking device.

Connect the Kensington security system cable between the monitor and a table.

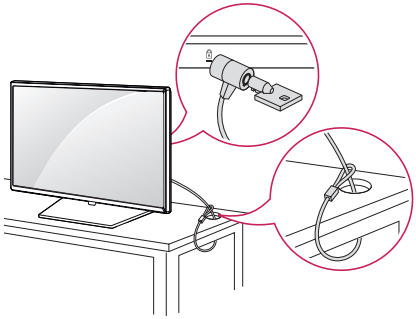

NOTE

- The Kensington lock device is an optional specification.
- This is a general illustration of installation and may look different from the product held by the customer.

CHECKING BEFORE INSTALLATION

We are not responsible for product damage caused by failure to follow the guide.

Installation Orientation

Using Vertically

When installing vertically, rotate the monitor 90 degrees anti-clockwise while facing the front of the screen.

Tilt Angle

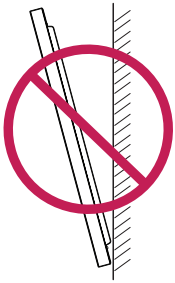

Ceiling, Floor Orientation

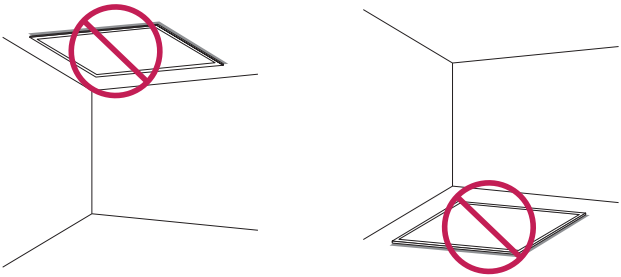

Installation Location

We are not responsible for product damage caused by failure to follow the guide.

Indoor

Installing on a Wall

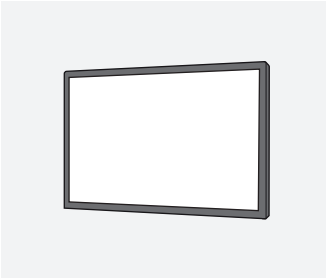

A : 40 mm or more

- The warranty will not cover any damage caused by using the product in direct sunlight on the front panel.

Installing on a Recessed Wall

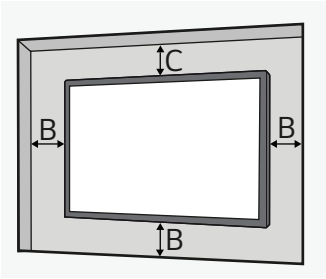

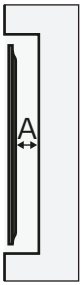

A : 40 mm or more

B : 50 mm or more

C : 70 mm or more

- The warranty will not cover any damage caused by using the product in direct sunlight on the front panel.

Outdoor

Outdoor Enclosed

Wall Mount Holder

To install the monitor on a wall, attach a wall mount holder (optional) to the back of the monitor.
Take caution, and ensure that the wall mount holder (optional) is securely fixed to the monitor and to the wall.
The VESA dimensions of the wall mount by model are as follows.

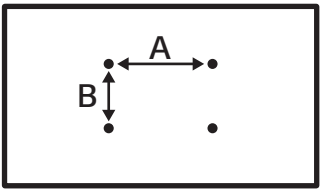

Model	VESA Dimensions (A x B) (mm)	Standard Dimensions	Length (Maximum) (mm)	Quantity
32SM5J	200 x 200	M6	21.3	4

CAUTION

- Disconnect the power cord first, and then move or install the monitor. Otherwise, it may result in electric shock.
- If the monitor is installed on a ceiling or inclined wall, it may fall and result in injury.
- Damage to the monitor by tightening the screws too tightly may void your warranty.
- Use screws and wall mount plates conforming to VESA standards. Breakage or personal injury due to use or misuse of inappropriate components is not covered by the warranty of this product.

NOTE

- Using screws longer than the indicated depth may damage the inside of the product. Be sure to use the proper length.
- For more information on installation, please refer to the user manual for the wall mount.

PRECAUTIONS FOR USE

Dust

The warranty will not cover any damage caused by using the product in an excessively dusty environment.

Afterimage

- After-image appears when the product is turned off.
  - Pixels may be damaged rapidly if a still image is displayed on the screen for a long period of time. Use the screen-saver function.
  - Switching from a screen with high differences in luminance (black and white or grey) to a darker screen may cause an afterimage. This is normal due to the display characteristics of this product.
- When the LCD screen is in a still pattern for extended periods of use, a slight voltage difference may occur between the electrodes that operate the liquid crystal (LC). The voltage difference between the electrodes increases over time and tends to keep the liquid crystal aligned in one direction. At this time, the previous image remains, which is called an afterimage.
- Afterimages do not occur when continuously changing images are used but take place when a certain screen is fixed for a long time. The following are operational recommendations for reducing the occurrence of afterimages when using a fixed screen. The maximum recommended time for switching the screen is 12 hours. Shorter cycles are better for preventing afterimages.
- Recommended Usage Condition

1 Change the background colour and text colour at equal intervals.

- Afterimages occur less when the colours to be changed are complementary to one another.

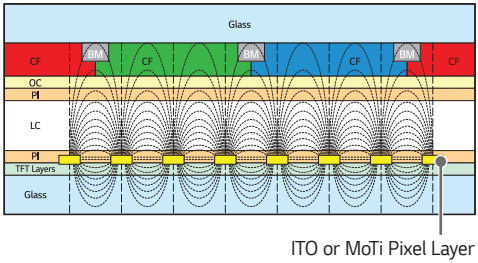

2 Switch the screen at equal time intervals.

- Take caution, and ensure that text or images from before the screen change are not left in the same location after the screen change.

PRODUCT SPECIFICATIONS

Without prior notice, all product information and specifications contained in this manual are subject to change to improve the performance of the product.

Input/Output Ports	HDMI1, HDMI2, HDMI3, IR & LIGHT SENSOR, AUDIO OUT, LAN IN, RS-232 IN/OUT, USB 2.0 IN	
Resolution	Recommended Resolution	1920 x 1080 @ 60 Hz (HDMI1, HDMI2, HDMI3)
	Max Resolution	
Power Voltage	AC 100-240 V ~ 50/60 Hz 0.8 A	
Environmental Conditions	Operating Temperature Operating Humidity	0 °C to 40 °C 10 % to 80 % (Condition for preventing condensation)
	Storage Temperature Storage Humidity	-20 °C to 60°C 5 % to 85 % (Condition for preventing condensation) * Product box packaging storage conditions
Audio	Input Sensitivity	0.7 Vrms
Power Consumption	On Mode	55 W (Typ.)
	Sleep Mode / Standby Mode	≤ 0.5 W

Model Name	Size (Width x Height x Thickness) (mm)		Weight (kg)
32SM5J	Head	729.4 x 428.9 x 55.5	5.7
	Head + Stand	729.4 x 481 x 154.2	6.5

HDMI (PC) Support Mode

Resolution	Horizontal Frequency (kHz)	Vertical Frequency (Hz)	Note
800 x 600	37.879	60.317	
1024 x 768	48.363	60	
1280 x 720	44.772	59.855	
1280 x 1024	63.981	60.02	
1680 x 1050	65.29	59.954	
1920 x 1080	67.5	60	

HDMI (DTV) Support Mode

Resolution	Horizontal Frequency (kHz)	Vertical Frequency (Hz)	Note
480/60p	31.5	60	
576/50p	31.25	50	
720/50p	37.5	50	
720/60p	45	60	
1080/50i	28.1	50	
1080/60i	33.75	60	
1080/50p	56.25	50	
1080/60p	67.432	59.94	
1080/60p	67.5	60	

Wireless module (LGSBWAC92) Specifications	
Wireless LAN (IEEE 802.11a/b/g/n/ac)	
Frequency range (MHz)	**Output power (Max.) (dBm)**
2400 to 2483.5	18
5150 to 5725	18
5725 to 5850	12
Bluetooth	
Frequency range (MHz)	**Output power (Max.) (dBm)**
2400 to 2483.5	8
• As band channels can vary per country, the user cannot change or adjust the operating frequency. This product is configured for the regional frequency table. • For consideration of the user, this device should be installed and operated with a minimum distance of 20 cm between the device and the body.	

(Only Nigeria)

Connection and use of this communication equipment is permitted by the Nigerian Communications Commission.

(Only Hong Kong)

Wireless module (LGSBWAC92) Specifications	
Wireless LAN (IEEE 802.11a/b/g/n/ac)	
Frequency range (MHz)	**Output power (Max.) (dBm)**
2400 to 2483.5	18
5150 to 5350	18
5725 to 5850	12
Bluetooth	
Frequency range (MHz)	**Output power (Max.) (dBm)**
2400 to 2483.5	8
• As band channels can vary per country, the user cannot change or adjust the operating frequency. This product is configured for the regional frequency table. • For consideration of the user, this device should be installed and operated with a minimum distance of 20 cm between the device and the body.	

(Only Vietnam)

Wireless module (LGSBWAC92) Specifications	
Wireless LAN (IEEE 802.11a/b/g/n/ac)	
Frequency range (MHz)	**Output power (Max.) (dBm)**
2400 to 2483.5	17.5
5150 to 5350	17.5
5725 to 5850	12
Bluetooth	
Frequency range (MHz)	**Output power (Max.) (dBm)**
2400 to 2483.5	8
• As band channels can vary per country, the user cannot change or adjust the operating frequency. This product is configured for the regional frequency table. • For consideration of the user, this device should be installed and operated with a minimum distance of 20 cm between the device and the body.	

(Only Philippines)

Wireless module (LGSBWAC92) Specifications	
Wireless LAN (IEEE 802.11a/b/g/n/ac)	
Frequency range (MHz)	**Output power (Max.) (dBm)**
2400 to 2483.5	18
5150 to 5725	18
5725 to 5850	18
Bluetooth	
Frequency range (MHz)	**Output power (Max.) (dBm)**
2400 to 2483.5	8
• As band channels can vary per country, the user cannot change or adjust the operating frequency. This product is configured for the regional frequency table. • For consideration of the user, this device should be installed and operated with a minimum distance of 20 cm between the device and the body. • FCC ID: BEJLGSBWAC92 / IC: 2703H-LGSBWAC92	

LICENCE

Supported licenses may differ by model. For more information of the licenses, visit *www.lg.com*.

The terms HDMI, HDMI High-Definition Multimedia Interface, and the HDMI Logo are trademarks or registered trademarks of HDMI Licensing Administrator, Inc.

Manufactured under license from Dolby Laboratories. Dolby, Dolby Vision, Dolby Audio, Dolby Atmos, and the double-D symbol are trademarks of Dolby Laboratories.

Covered by Patents at patentlist.hevcadvance.com

The Bluetooth® word mark and logos are registered trademarks owned by Bluetooth SIG, Inc. and any use of such marks by LG Electronics Inc. is under license. Other trademarks and trade names are those of their respective owners.

LG
Life's Good

ENERGY STAR

This product qualifies for ENERGY STAR®.
Changing the factory default configuration and settings or enabling certain optional features and functionalities may increase energy consumption beyond the limits required for ENERGY STAR® certification.
Refer to ENERGYSTAR.gov for more information on the ENERGY STAR® program.

The model and serial number of the product are located on the back and on one side of the product. Record them below in case you ever need service.

MODEL

SERIAL NO.

Temporary noise is normal when powering ON or OFF this device.