Scan the QR code to see the manual.

OWNER'S MANUAL

AIR CONDITIONER

Read this owner’s manual thoroughly before operating the appliance and keep it handy for reference at all times.

ENGLISH

Duct

MFL72036108
Rev.00_052723

www.lg.com

Copyright © 2023 LG Electronics Inc. All Rights Reserved.

TABLE OF CONTENTS

This manual may contain images or content that may be different from the model you purchased.

This manual is subject to revision by the manufacturer.

SAFETY INSTRUCTIONS

READ ALL INSTRUCTIONS BEFORE USE 3
WARNING INSTRUCTIONS 3
CAUTION INSTRUCTIONS 8

OPERATION

Before Use 11
Product Overview 12

SMART FUNCTIONS

LG ThinQ Application 14

MAINTENANCE

Cleaning 16
Tips for Maintenance 18

TROUBLESHOOTING

Before Calling for Service 19

APPENDIX

CARING FOR THE ENVIRONMENT 24

SAFETY INSTRUCTIONS

READ ALL INSTRUCTIONS BEFORE USE

The following safety guidelines are intended to prevent unforeseen risks or damage from unsafe or incorrect operation of the appliance.

The guidelines are separated into 'WARNING' and 'CAUTION' as described below.

Safety Messages

⚠	This symbol is displayed to indicate matters and operations that can cause risk. Read the part with this symbol carefully and follow the instructions in order to avoid risk.
⚠	**WARNING** This indicates that the failure to follow the instructions can cause serious injury or death.
⚠	**CAUTION** This indicates that the failure to follow the instructions can cause the minor injury or damage to the product.

WARNING INSTRUCTIONS

⚠ WARNING

- To reduce the risk of explosion, fire, death, electric shock, injury or scalding to persons when using this product, follow basic precautions, including the following:

Technical Safety

- This appliance can be used by children aged from 8 years and above and persons with reduced physical, sensory or mental capabilities or lack of experience and knowledge if they have been given supervision or instruction concerning use of the appliance in a safe way and

understand the hazards involved. Children shall not play with the appliance. Cleaning and user maintenance shall not be made by children without supervision.

- This appliance is not intended for use by persons (including children) with reduced physical, sensory or mental capabilities, or lack of experience and knowledge, unless they have been given supervision or instruction concerning use of the appliance by a person responsible for their safety. Children should be supervised to ensure that they do not play with the appliance.
- Installation or repairs made by unauthorized persons can pose hazards to you and others.
- The information contained in the manual is intended for use by a qualified service technician who is familiar with the safety procedures and equipped with the proper tools and test instruments.
- Failure to read and follow all instructions in this manual can result in equipment malfunction, property damage, personal injury and/or death.
- The refrigerant and insulation blowing gas used in the appliance require special disposal procedures. Consult a service agent or a similarly qualified person before disposing of them.
- When the power cord is to be replaced, the replacement work shall be performed by authorized personnel using only genuine replacement parts.
- If the supply cord is damaged, it must be replaced by the manufacturer or its service agents or similarly qualified person in order to avoid a hazard.
- The appliance shall be installed in accordance with national wiring regulations.
- This appliance must be properly grounded.
- Do not cut or remove the grounding prong from the power plug.
- Attaching the earth wire to the power outlet cover screw does not ground the appliance unless the cover screw is metal, uninsulated, and the power outlet is grounded through house wiring.

- If you have any doubt whether the air conditioner is properly grounded, have the power outlet and circuit checked by a qualified electrician.

Installation

- Contact an authorized service centre when installing or relocating the air conditioner.
- Contact the dealer, seller, qualified electrician or authorized service centre for cleaning or maintenance the air conditioner.
- Do not install, remove, or re-install the unit by yourself (customer). Installation or reparis done by unauthorized persons can pose hazards to you and others.
- For electrical work, contact the dealer, seller, qualified electrician or authorized service centre.
- Do not attempt to do electrical work or grounding work unless you are licensed to do so. Consult with the dealer for electrical work and grounding work.
- Do not install the product on a defective installation stand.
- Be sure the installation area does not deteriorate with age.
- Be sure to only use accessories made by LG which are specifically designed for use with the equipment and have them installed by a professional.
- Never install the outdoor unit on a moving base or a place from where it can fall down.
- Do not install the unit in potentially explosive atmospheres.
- Do not install the air conditioner in a place where flammable liquids or gases such as gasoline, propane, paint thinner, etc., are stored.
- Install the panel and the cover of the control box safely.
- Install dedicated electric outlet and earth leakage breaker before using the appliance.
- Use standard circuit breaker and fuse that conform to the rating of the air conditioner.

- Do not use a multiple socket, extension power cable or adapter with this appliance.
- The indoor/outdoor wiring connections must be secured tightly, and the cable should be routed properly so that there is no force pulling the cable from the connection terminals. Improper or loose connections can generate heat or cause a fire.
- Do not connect the ground wire to a gas pipe, a lightning rod, or a telephone ground wire.
- Use non-flammable gas (nitrogen) to check for leaks and to purge air; using compressed air or flammable gas may cause fire or explosion.

Operation

- Do not modify or extend the power cable. Scratches or peeling insulation on the power cables may result in fire or electric shock, and should be replaced.
- Make sure that the power cable is neither dirty, loose, nor broken.
- Do not place any objects on the power cable.
- Take care to ensure that the power cable could not be pulled out or damaged during operation.
- Never touch, operate, or repair the air conditioner with wet hands.
- Do not insert hands or other objects through the air inlet or outlet while the air conditioner is operating.
- Make sure that nobody especially children do not climb on or hit the outdoor unit.
- Be sure to use only those parts listed in the service parts list. Never attempt to modify the equipment.
- Do not touch the refrigerant pipe, water pipe or any internal parts while the unit is operating or immediately after operation.
- Do not leave flammable substances such as gasoline, benzene, or thinner near the air conditioner.
- Do not use the air conditioner for an extended period of time in a small place without proper ventilation.

- Be sure to ventilate sufficiently when the air conditioner and a heating appliance such as a heater are used simultaneously.
  - There is the possibility of oxygen deficiency.
- Do not block the inlet or outlet of airflow.
- Cut off the power supply if there is any noise, smell, or smoke coming from the air conditioner.
- Contact an authorized service centre when the air conditioner is submerged by flood waters.
- In the event of a gas leak (such as Freon, propane gas, LP gas, etc.) ventilate sufficiently before using the air conditioner again.
- Stop operation and close the window in storm or hurricane. If possible, remove the product from the window before the hurricane arrives.

Maintenance

- Before cleaning or performing maintenance, disconnect the power supply and wait until the fan stops.
  - The fan rotates at a very high speed during operation.
  - There is a possibility of injury if the unit's power is accidentally triggered on while cleaning inner parts of the unit.
- Appliance shall be disconnected from its power source during service and replacing parts.

Refrigerant

- Follow the standards of the corresponding region or country for handling the refrigerant and the air conditioner and for disassembling the air conditioner.
- Use only the refrigerant specified on the air conditioner label.
- Do not input air or gas into the system except the specified refrigerant.
- Do not touch the leaking refrigerant during installation or repair.
- If the refrigerant gas leaks during the installation, ventilate the area immediately.

- Be sure to check for refrigerant leaks after installing or repairing the product.
- In the case of refrigerant leakage, consult the dealer. When the air conditioner is to be installed in a small room, it is necessary to take proper measures so that the amount of any leaked refrigerant does not exceed the limiting concentration even when it leaks. If the refrigerant leaks exceeding the level of limiting concentration, an oxygen deficiency accident may happen.

CAUTION INSTRUCTIONS

⚠ CAUTION

- To reduce the risk of minor injury to persons, malfunction, or damage to the product or property when using this product, follow basic precautions, including the following:

Installation

- Transport the air conditioner with two or more people or use a forklift.
- Do not install the air conditioner in an area where it is directly exposed to sea wind (salt spray).
- Install the drain hose properly for the smooth drainage of water condensation.
- Install the air conditioner in a place where the noise from the outdoor unit or the exhaust fumes will not inconvenience the neighbours.
- Safely dispose of packing materials such as screws, nails, plastic bags or batteries using proper packaging after installation or repair.
- Exercise caution when unpacking or installing the air conditioner.
- Be especially careful of the case edges and the fins on the condenser and evaporator.
- To avoid vibration or water leakage, keep level even when installing the product.
- When installing the unit, use the installation kit provided with the product.

- The heat exchanger fins are sharp edges enough to cut. To avoid injury, wear gloves or cover the fins while working around them.

Operation

- Do not drink the water drained from the air conditioner.
- Do not place objects in direct proximity of the outdoor unit and do not let leaves and other debris accumulate around the unit. Leaves are a hotbed for small animals which can enter the unit. Once inside the unit, such animals can cause malfunctions, smoke or fire if they come into contact with electrical parts.
- Do not let the air conditioner run for a long time when humidity is very high or when a door or a window has been left open.
- Do not expose people, animals, or plants to the cold or hot wind from the air conditioner for extended periods of time.
- Do not use the product for special purposes, such as preserving foods, works of art, etc. the air conditioner is designed for consumer purposes, and is not a precision refrigeration system. There is risk of damage or loss of property.
- Do not turn on the breaker or power under condition that front panel, cabinet, top cover, control box cover are removed or opened.
- Do not open the front grille of the product during operation. Do not touch the electrostatic filter, if the unit is so equipped.
- Be cautious that water could not enter the product.
- Make sure that there are no obstacles close to the outdoor unit. The presence of obstacles close to the outdoor unit may reduce the performance of outdoor unit or increase its operating sound.
- Do not turn off the power immediately after stopping operation. Always wait for at least five minutes before turning off the power.

Maintenance

- Use a sturdy stool or ladder when cleaning, maintaining, or repairing the air conditioner at a height.

- Do not plug or unplug the power supply plug to turn the unit on or off.
- Never use strong cleaning agents or solvents or spray water when cleaning the air conditioner. Use a soft cloth.
- Never touch the metal parts of the air conditioner when removing the air filter.
- Tear apart and throw away plastic packaging bags so that children will not play with them.
- When the product is not to be used for a long time, disconnect the power supply plug or turn off the breaker.
- Do not tilt the unit when removing or uninstalling it. The condensed water inside can spill.
- Check the foundation for damaged on a continuous basis, especially if it has been in use for a long time.
- Always insert the filter securely. Clean the filter every two weeks or more often if necessary. A dirty filter reduces the efficiency of the air conditioner and could cause product malfunction or damage.

OPERATION

Before Use

Notes for Operation

- Adjust the direction of the airflow vertically to circulate indoor air.
- Speed up the fan to cool or warm indoor air quickly, within a short period of time.
- Turn off the appliance and periodically open windows for ventilation. The indoor air quality may deteriorate if the appliance is used for long periods.
- Clean the air filter once every 2 weeks. Dust and impurities collected in the air filter may block the airflow or reduce the appliance performance.

Suggestions for Energy Saving

- Do not over-cool the space. This may be harmful to your health and may consume more electricity.
- Block sunlight with blinds or curtains while you are operating the appliance.
- Keep doors or windows closed tightly while you are operating the appliance.

Product Overview

4way Cassette

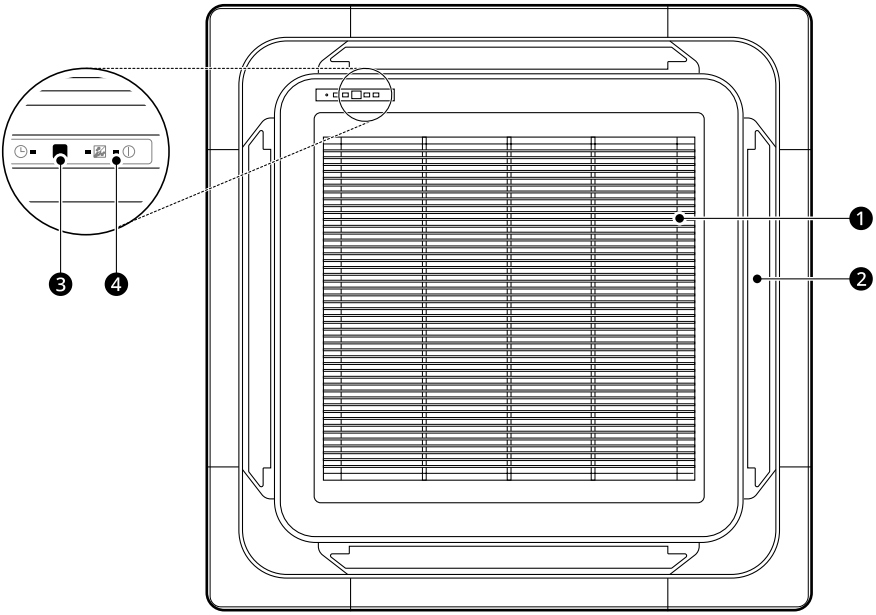

❶ **Air Intake and Air Filter**

Takes in air from the room and reduces dust in the air.

❷ **Air Outlet**

Circulates air back into the room at the desired temperature.

❸ **Forced Operation Button**

Operates the product when the remote control can't be used.

❹ **Product Display and Remote Control Receiver**

Displays the operating status and contains the receiver for the wireless remote.

Display

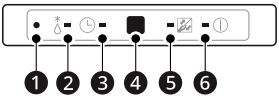

❶ **Forced Operation Button**

Operates the product when the remote control can't be used.

- Press the ❶ button for about 2 seconds. The setting is **Cooling** mode, **Power**, 18 ℃.

❷ **Defrost Mode**

Lights up when the defrost mode or hot start*1function operates.

*1 This function is only available on heat pump models.

❸ **Timer**

Lights up when the timer function is set.

❹ **Remote Control Receiver**

❺ **Filter Sign**

Lights up when the time to use filter is more than 2400 hours after first operating the product.

❻ **Power**

Lights up when the product turns on or operates.

Manual Operation

If your wireless remote control is unavailable, you can turn the appliance on and off by pressing the **Forced Operation** button ❶ on the indoor unit.

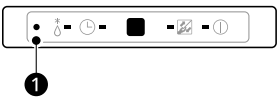

Restoring the Previous Settings

When the air conditioner is turned on again after a power failure, Auto Start function restores the previous settings.

When using the appliance for the first time, Auto Restart function is set. You can cancel and set this function by pressing the **Forced Operation** button ❶ on the indoor unit.

Canceling Auto Restart

1 Open the front panel cover.

2 Press and hold the **Forced Operation** button ❶ for 6 seconds.

3 When the appliance beeps twice, release the **Forced Operation** button ❶. The product will beep twice and the lamp will blink 8 times.

Setting Auto Restart

1 Open the front panel cover.

2 Press and hold the **Forced Operation** button ❶ for 6 seconds.

3 When the appliance beeps twice, release the **Forced Operation** button ❶. The product will beep twice and the blue lamp will blink 4 times.

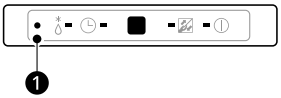

NOTE

- This feature may change depending on the model type.
- If you press and hold the **Forced Operation** button ❶ for 3 - 5 seconds, instead of 6 seconds, the appliance will switch to the test operation. In this test operation, the appliance blows out strong cooling air for 18 minutes and then returns to factory default settings.

SMART FUNCTIONS

LG ThinQ Application

This feature is only available on models with Wi-Fi.

The **LG ThinQ** application allows you to communicate with the appliance using a smartphone.

LG ThinQ Application Features

Communicate with the appliance from a smartphone using the convenient smart features.

- **Smart Diagnosis**
  - If you experience a problem while using the appliance, this smart diagnosis feature will help you diagnose the problem.
- Settings
  - Allows you to set various options on the appliance and in the application.

NOTE

- If you change your wireless router, internet service provider, or password, delete the registered appliance from the **LG ThinQ** application and register it again.
- The application is subject to change for appliance improvement purposes without notice to users.
- Functions may vary by model.

Before Using LG ThinQ Application

1 Check the distance between the appliance and the wireless router (Wi-Fi network).
   - If the distance between the appliance and the wireless router is too far, the signal becomes weak. It may take a long time to register or fail to install the application.

2 Turn off the **Mobile data** or **Cellular Data** on your smartphone.

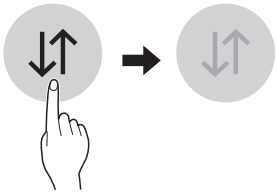

3 Connect your smartphone to the wireless router.

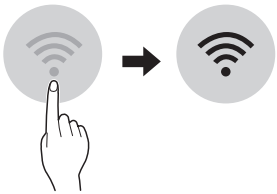

NOTE

- To verify the Wi-Fi connection, check that icon on the control panel is lit.
- The appliance supports 2.4 GHz Wi-Fi networks only. To check your network frequency, contact your Internet service provider or refer to your wireless router manual.
- **LG ThinQ** is not responsible for any network connection problems or any faults, malfunctions, or errors caused by network connection.
- If the appliance is having trouble connecting to the Wi-Fi network, it may be too far from the router. Purchase a Wi-Fi repeater (range extender) to improve the Wi-Fi signal strength.
- The Wi-Fi connection may not connect or may be interrupted because of the home network environment.
- The network connection may not work properly depending on the Internet service provider.

- The surrounding wireless environment can make the wireless network service run slowly.
- If the appliance cannot be connected due to problems with the wireless signal transmission, unplug the appliance and wait about a minute before trying again.
- If the firewall on your wireless router is enabled, disable the firewall or add an exception to it.
- The wireless network name (SSID) should be a combination of English letters and numbers. (Do not use special characters.)
- Smartphone user interface (UI) may vary depending on the mobile operating system (OS) and the manufacturer.
- If the security protocol of the router is set to **WEP**, you may fail to set up the network. Please change it to other security protocols (**WPA2** is recommended) and register the product again.

Installing LG ThinQ Application

Search for the **LG ThinQ** application from the Google Play Store or Apple App Store on a smartphone. Follow instructions to download and install the application.

Open Source Software Notice Information

To obtain the source code that is contained in this product, under GPL, LGPL, MPL, and other open source licenses that have the obligation to disclose source code, and to access all referred license terms, copyright notices and other relevant documents, please visit https://opensource.lge.com.

LG Electronics will also provide open source code to you on CD-ROM for a charge covering the cost of performing such distribution (such as the cost of media, shipping, and handling) upon email request to opensource@lge.com.

This offer is valid to anyone in receipt of this information for a period of three years after our last shipment of this product.

Wireless LAN Module Specifications

Model	LCW-003
Frequency Range	2412 MHz - 2472 MHz
Output Power(Max)	IEEE 802.11b:18.37 dBm IEEE 802.11g:17.67 dBm IEEE 802.11n:17.67 dBm

MAINTENANCE

Cleaning

Cleaning Interval

⚠ WARNING

- Before cleaning or performing maintenance, disconnect the power supply and wait until the fan stops.
- When you remove the air filter, do not touch the metal parts of the indoor unit. Doing so may cause an injury.

Filter Type	Water Washing	Interval
Air Filter	O	2 Weeks

NOTE

- Never use water that is hotter than 40 °C when you clean the filters. Doing so may cause deformation or discolouration.
- Never use volatile substances when you clean the filters. Doing so may damage the surface of the appliance.
- Cleaning interval is set period assuming that 8 hours of daily use.

Cleaning the Air Filter

NOTE

- Do not bend the air filter, as it may break.
- Assemble the air filter properly to prevent dust and other substances from entering the product.

1 Turn off the power to the appliance.

2 Press the fixing hooks on both sides and open the front grille.

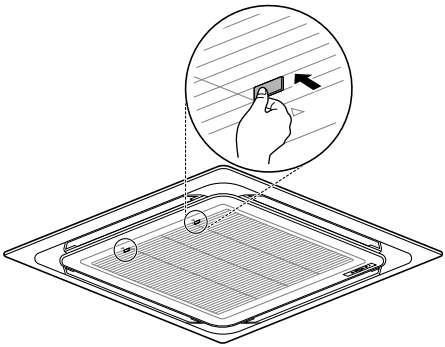

3 Remove the air filter.

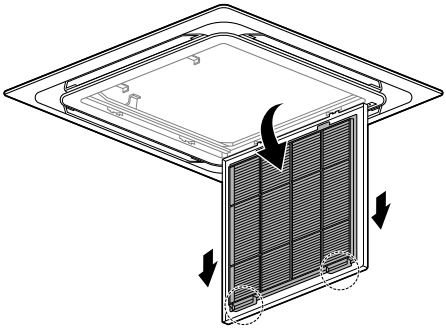

4 Clean the air filter with a vacuum cleaner or wash it with lukewarm water and a mild detergent.

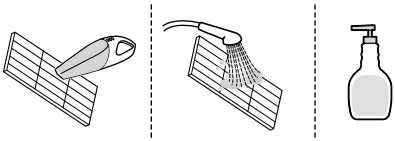

5 Dry the filter in the shade.

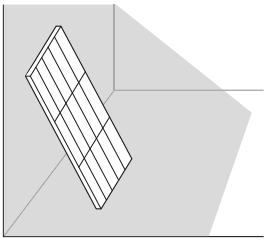

6 Insert the air filter.

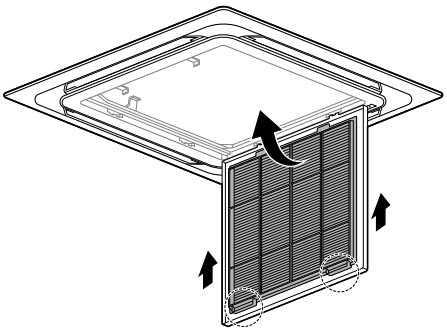

7 Press the fixing hooks on both sides and close the front grille.

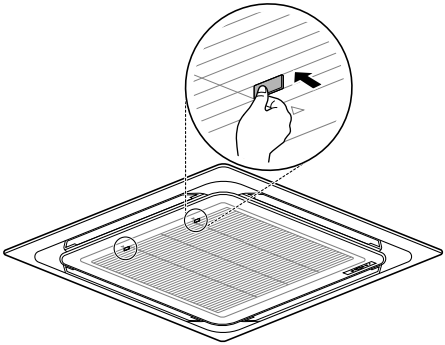

Tips for Maintenance

Before Long Periods of Disuse

1 Operate the air conditioner in the **Fan mode** for 2 to 3 hours.
- This will dry out the internal mechanisms.

2 Turn off the appliance.

3 Turn off the breaker.

After Long Periods of Disuse

1 Clean the air filter and install it in the indoor unit.

2 Check that the air inlet and outlet of the indoor/outdoor unit are not blocked.

3 Check that the ground wire is connected correctly.
- The ground wire may be connected to the side of the indoor unit.

TROUBLESHOOTING

Before Calling for Service

Please check the following before you contact the service centre. If the problem persists, contact your local service centre.

NOTE

- Some functions may not be supported, depending on the model.

Operation

Symptoms	Possible Cause & Solution
The appliance does not work normally.	**Burning smell and strange sounds are coming from the appliance.** • Turn off the appliance, switch off or disconnect the power supply, and contact the service centre.
	Water leaks from the indoor unit even when the humidity level is low. • Turn off the appliance, switch off or disconnect the power supply, and contact the service centre.
	The power cable is damaged or it is generating excessive heat. • Turn off the appliance, switch off or disconnect the power supply, and contact the service centre.
	A switch, a circuit breaker (safety, ground) or a fuse is not operating properly. **Has the fuse blown or has the circuit breaker been tripped?** • Turn off the appliance, switch off or disconnect the power supply, and contact the service centre.
	The appliance generates an error code from its self-diagnosis. • Turn off the appliance, switch off or disconnect the power supply, and contact the service centre.
The fan speed cannot be adjusted.	**The Jet mode or Auto Operation mode is selected.** • In some operating modes, you cannot adjust the fan speed. Select an operating mode in which you can adjust the fan speed.
	The airflow generated by the air conditioner may be automatically adjusted during operation. • When the air conditioner reaches the set temperature, it reduces the airflow rate to avoid generating cool airflow when heating, or to minimize energy consumption and indoor humidity change when cooling.
The temperature cannot be adjusted.	**The Fan mode or Jet mode is selected.** • In some operating modes, you cannot adjust the temperature. Select an operating mode in which you can adjust the temperature.

Symptoms	Possible Cause & Solution
The appliance stops during operation.	**The appliance is suddenly turned off.** • The **Off Timer** function may have timed out, which turns the appliance off. Check the timer settings.
	Have you made a mistake in timer operation? • Set the timer correctly.
	A power failure has occurred during operation. • Wait for the power to come back on. If you have the **Auto Restart** function enabled, your appliance will resume its last operation several minutes after power is restored.
The appliance does not work.	**A fuse exploded or the power supply is blocked.** • Replace the fuse or check if the circuit breaker has tripped.
	The appliance is unplugged. • Check whether the power cord is plugged into the outlet or the power isolators are switched on.
	A power failure has occurred. • Turn off the appliance when a power failure occurs. • When the power is restored, wait 3 minutes, and then turn on the appliance.
	The voltage is too high or too low. • Check if the circuit breaker has tripped.
	The appliance was turned off automatically at a preset time. • Turn the appliance on.
	The battery orientation in the wireless remote control is incorrect. • Make sure that the batteries are inserted correctly in your wireless remote control. • If the batteries are placed correctly, but the appliance still does not operate, replace the batteries and try again.
	Are the indoor unit's air inlet or outlet vents obstructed? • Remove the obstacles.
The appliance does not emit cool air.	**Air is not circulating properly.** • Make sure that there are no curtains, blinds, or pieces of furniture blocking the front of the appliance.
	The air filter is dirty. • Clean the air filter once every 2 weeks. • See “Cleaning the Air Filter” for more information.

Symptoms	Possible Cause & Solution
The appliance does not emit cool air.	**The room temperature is too high.** • In summer, cooling the indoor air fully may take some time. In this case, select the **Jet** mode to cool the indoor air quickly.
	The room may have been very hot when the room air conditioner was first turned on. • Allow time for it to cool down.
	Cold air is escaping from the room. • Make sure that no cold air is escaping through the ventilation points in the room.
	The desired temperature is higher than the current temperature. • Set the desired temperature to a level lower than the current temperature.
	There is a heating source nearby. • Avoid using heat generators like electric ovens or gas burners while the air conditioner is in operation.
	Fan mode is selected. • During **Fan** mode, air blows from the appliance without cooling or heating the indoor air. • Switch the operating mode to a cooling operation.
	Outside temperature is too high. • The cooling effect may not be sufficient.
The appliance does not emit warm air.	**When the Heating mode starts, the vane is almost closed, and no air comes out, even though the outdoor unit is operating.** • This is normal. Please wait until the appliance has generated enough warm air to blow through the indoor unit.
	The outdoor unit is in Defrosting mode. • In **Heating** mode, ice and frost is built up on the coils when the outside temperature falls. The **Defrosting** mode reduces a layer of frost on the coil, and it should finish in approximately 15 minutes.
	Outside temperature is too low. • The heating effect may not be sufficient.
The air conditioner changes generated airflow during operation.	**When the appliance reaches the desired temperature, the airflow rate reduces in order to avoid generating cool airflow during heating, or to minimize energy consumption and indoor humidity change during cooling.** • This symptom is normal.
It seems that condensation is leaking from the air conditioner.	**Condensation occurs when the airflow from the air conditioner cools the warm room air.** • This symptom is normal.

Performance

Symptoms	Possible Cause & Solution
The indoor unit is still operating even when the appliance has been turned off.	**The Auto Clean function is being operated.** • Allow the **Auto Clean** function to continue since it reduces any remaining moisture inside the indoor unit. If you do not want this function, you can turn the indoor unit off.
The air outlet on the indoor unit is discharging mist.	**The cooled air from the appliance makes mist.** • When the room temperature decreases, this phenomenon will disappear.
Water leaks from the outdoor unit.	**In the heating operations, condensed water drops from the heat exchanger.** • Install a drain hose under the base pan. Contact the installer.
There is noise or vibration.	**A clicking sound can be heard when the appliance starts or stops due to movement of the reversing valve.** **Creaking sound: The plastic parts of the indoor unit creak when they shrink or expand due to sudden temperature changes.** • Noise is normal during or after operation. It is not a sign of malfunction.
	Flowing sound: This is the flow of refrigerant through the appliance. **Blowing sound: This sound generates when compressed air is released into the atmosphere.** **This is the sound of the dehumidifying water being processed inside the air conditioning unit.** • These are normal symptoms. The noise will stop.
Crack sound is heard.	**This sound is generated by the expansion or constriction of the front panel, etc. due to changes of temperature.** • These are normal symptoms. The noise will stop.
The indoor unit gives off an odour.	**Odours (such as cigarette smoke) may be absorbed into the indoor unit and discharged with airflow.** • If the smell does not disappear, you need to wash the filter. If this does not work, contact the service centre to clean your heat exchanger.
	Check that this is not a damp smell exuded by the walls, carpet, furniture or cloth items in the room. • If the smell comes out from walls, carpet, furniture or cloth item, clean it.
Remote control display is faint, or no display at all.	**Are the batteries depleted?** • Replace the batteries with a new one.
	Are the batteries inserted in the opposite + and - directions? • Make sure that the + and – terminals of the batteries are oriented correctly.

Wi-Fi

Symptoms	Possible Cause & Solution
Your appliance and smartphone are not connected to the Wi-Fi network.	**The password for the Wi-Fi that you are trying to connect to is incorrect.** • Find the Wi-Fi network connected to your smartphone and remove it, then register your appliance on **LG ThinQ**.
	Mobile data for your smartphone is turned on. • Turn off the **Mobile data** of your smartphone and register the appliance using the Wi-Fi network.
	The wireless network name (SSID) is set incorrectly. • The wireless network name (SSID) should be a combination of English letters and numbers. (Do not use special characters.)
	The router frequency is not 2.4 GHz. • Only a 2.4 GHz router frequency is supported. Set the wireless router to 2.4 GHz and connect the appliance to the wireless router. To check the router frequency, check with your Internet service provider or the router manufacturer.
	The distance between the appliance and the router is too far. • If the distance between the appliance and the router is too far, the signal may be weak and the connection may not be configured correctly. Move the location of the router so that it is closer to the appliance.

APPENDIX

CARING FOR THE ENVIRONMENT

Disposal of Your Old Appliance (as per e-waste Rules)

1) When this crossed out wheeled bin symbol is depicted on the product and its operator’s manual, it means the product is covered by E-Waste Management Rules India published by MoEF & CC , Govt. of India and are meant to be recycled, dismantled, refurbished or disposed off.

2) Do's

   a. The product is required to be handed over only to the authorized recycler for disposal.

   b. Keep the product in isolated area, after it becomes non-functional/unrepairable so as to prevent its accidental breakage.

   Don'ts

   a. The product should not be opened by the user himself/herself, but only by authorized service personnel.

   b. The product is not meant for re-sale to any unauthorized agencies/scrap dealer/ kabariwalah.

   c. The product is not meant for mixing into household waste stream.

   d. Do not keep any replaced spare part(s) from the product in exposed area.

3) Any disposal through unauthorized agencies/person will attract action under Environment (Protection) Act 1986.

4) Hazards of improper handling or accidental breakage.

   a. The refrigerant used can be combustible at low pressure. The potential health effect of over exposure is dizziness, headache and heart irregularities.

5) This product is complied with the requirement of Hazardous Substances as specified under E-Waste Management Rules India published by MoEF & CC , Govt. of India.

6) To locate a nearest collection centre or call for pick-up (limited area only) for disposal of this appliance, please contact No. 08069379999, Toll Free No. 1800-315-9999 for details. All collection centre and pick up facilities are done by third parties with LG Electronics India Pvt. Ltd. Merely as a facilitator. For more detailed information, please visit : http://www.lg.com/in.

अपने पुराने उपकरण का निपटान (ई- अपशिष्ट नियमों के अनुसार)

1. जब इस काटे गए पहिये वाले बिन का चिह्न किसी उपकरण और इसके ऑपरेटर और उसके ऑपरेटर की पुस्तिका के साथ संलग्न होता है, तो इसका मतलब है कि इसे "ई- अपशिष्ट" (प्रबंधन और हथालन) नियम के अंतर्गत सम्मलित किया गया है और इसके पुनर्नवीनीकरण, नवीनीकरण, विघटन और निपटान के लिए बनाया गया है।
   MoEF & CC भारत सरकार द्वारा प्रकाशित (भारतीय "ई- अपशिष्ट" (प्रबंधन और हथालन))

2. करें

   क. उपकरण को सिर्फ अधिकृत पुनः नवीनीकरणकर्ता को ही निपटारन करने हेतु हस्तांतरित करें।

   ख. जब उपकरण कार्यरत ना हो, इसे अलग क्षेत्र में रखें ताकि उपकरण से होने वाली दुर्घटनाओं से बचा जा सके।

   ना करें

   क. इस उपकरण को स्वयं उपयोगकर्ता द्वारा नहीं खोला जाना चाहिए, बल्कि केवल अधिकृत सेवा कर्मियों द्वारा ही खोला जाना चाहिए।

   ख. इस उपकरण को पुन: बिक्री के लिए किसी भी अनधिकृत संस्था /भंगार वाला /कबाड़ीवाला को ना दे।

   ग. इस उपकरण को किसी घरेलू अपशिष्ट सामान के साथ मिलाकर ना रखें।

   घ. उपकरण के बदले हुए या आंतरिक पुरजो को खुले क्षेत्र में न रखें।

3. यदि किसी अनधिकृत विभाग या व्यक्ति के द्वारा निपटारन किया जाता है तो यह पर्यावरण (सुरक्षा) अधिनियम १९८६ के अंतर्गत आता है।

4. दुर्घटना टूट/ फूट अव्यवस्थित रख-रखाव से बचें ।

   - क. रेफ्रिजरेंट कम दबाव पर दहनशील हो सकती है तथा इससे स्वास्थ्य पर दुष्प्रभाव पड़ सकता है जैसे चक्कर आना, सर दर्द और ह्रदय गति रुकना।

5. यह उत्पाद ई- अपशिष्ट (प्रबंधन और हथालन) नियम के तहत निर्दिष्ट खतरनाक पदार्थो की आवश्यकता का पालन करता है।
   MoEF & CC, भारत सरकार द्वारा प्रकाशित (भारतीय "ई- अपशिष्ट" (प्रबंधन और हथालन))

6. उपरोक्त पदार्थो के निपटारन के लिए नजदीकी निपटारन संसथान (संकीर्ण क्षेत्र) में कॉल करे। अधिक जानकारी के लिए हमारे नंबर **08069379999**, टोल फ्री नंबर **1800-315-9999** पर पर कॉल करें।सभी संग्रहण केंद्र व पिक-अप की सुविधाएं किसी थर्ड -पार्टी जो "**LG Electronics India Pvt. Ltd.**" को अपनी सेवाएं प्रदान कर रही हो से करवाए।
   अधिक जानकारी के लिए, कृपया देखें वेब साइट : **http://www.lg.com/in**

LG
Life's Good

LG Electronics India Pvt. Ltd.

Phone	1800 180 3575 (Toll Free) 12 x 7 (09:00 AM to 09:00 PM)
Address	Regd. Office: LG Electronics India Pvt. Ltd., A-24/6 Mohan Cooperative Industrial Estate, Mathura Road, New Delhi-110044 CIN No. U32107DL1997PTC220109