ENGLISH
ITALIANO
ESPAÑOL
FRANÇAIS
DEUTSCH
ΕΛΛΗΝΙΚΆ
ČEŠTINA
NEDERLANDS
POLSKI
LIMBA ROMÂNĂ
DANSK
SUOMI
NORSK
SVENSKA
HRVATSKI
SRPSKI
БЪЛГАРСКИ
MAGYAR
PORTUGUÊS

INSTALLATION MANUAL

AIR CONDITIONER

Please read this installation manual completely before installing the product.
Installation work must be performed in accordance with the national wiring standards by authorized personnel only.
Please retain this installation manual for future reference after reading it thoroughly.

MULTI V S

Original instruction

MFL67798017
Rev.07_071625

www.lg.com

Copyright © 2014 - 2025 LG Electronics Inc. All Rights Reserved.

TIPS FOR SAVING ENERGY

Here are some tips that will help you minimize the power consumption when you use the air conditioner.
You can use your air conditioner more efficiently by referring to the instructions below:

- Do not cool excessively indoors. This may be harmful for your health and may consume more electricity.
- Block sunlight with blinds or curtains while you are operating the air conditioner.
- Keep doors or windows closed tightly while you are operating the air conditioner.
- Adjust the direction of the air flow vertically or horizontally to circulate indoor air.
- Speed up the fan to cool or warm indoor air quickly, in a short period of time.
- Open windows regularly for ventilation as the indoor air quality may deteriorate if the air conditioner is used for many hours.
- Clean the air filter once every 2 weeks. Dust and impurities collected in the air filter may block the air flow or weaken the cooling / dehumidifying functions.

For your records

Staple your receipt to this page in case you need it to prove the date of purchase or for warranty purposes.

Write the model number and the serial number here:

Model number :

Serial number :

You can find them on a label on the side of each unit.

Dealer's name :

Date of purchase :

SAFETY INSTRUCTIONS

The following safety guidelines are intended to prevent unforeseen risks or damage from unsafe or incorrect operation of the appliance.
The guidelines are separated into 'WARNING' and 'CAUTION' as described below.

⚠ This symbol is displayed to indicate matters and operations that can cause risk. Read the part with this symbol carefully and follow the instructions in order to avoid risk.

⚠ WARNING

This indicates that the failure to follow the instructions can cause serious injury or death.

⚠ CAUTION

This indicates that the failure to follow the instructions can cause the minor injury or damage to the product.

⚠ WARNING

- Installation or repairs made by unqualified persons can result in hazards to you and others.
- The information contained in the manual is intended for use by a qualified service technician familiar with safety procedures and equipped with the proper tools and test instruments.
- Failure to carefully read and follow all instructions in this manual can result in equipment malfunction, property damage, personal injury and/or death.
- If the supply cord is damaged, it must be replaced by the manufacturer, its service agent or similarly qualified persons in order to avoid a hazard.

Installation

- Have all electric work done by a licensed electrician according to "Electric Facility Engineering Standard" and "Interior Wire Regulations" and the instructions given in this manual and always use a special circuit.
  - If the power source capacity is inadequate or electric work is performed improperly, electric shock or fire may result.
- Ask the dealer or an authorized technician to install the air conditioner.
  - Improper installation by the user may result in water leakage, electric shock, or fire.
- Always ground the product.
  - There is risk of fire or electric shock.
- Always install a dedicated circuit and breaker.
  - Improper wiring or installation may cause fire or electric shock.
- For re-installation of the installed product, always contact a dealer or an Authorized Service Center.
  - There is risk of fire, electric shock, explosion, or injury.
- Do not install, remove, or re-install the unit by yourself (customer).
  - There is risk of fire, electric shock, explosion, or injury.

- Do not store or use flammable gas or combustibles near the air conditioner.
  - There is risk of fire or failure of product.
- Use the correctly rated breaker or fuse.
  - There is risk of fire or electric shock.
- Prepare for strong wind or earthquake and install the unit at the specified place.
  - Improper installation may cause the unit to topple and result in injury.
- Do not install the product on a defective installation stand.
  - It may cause injury, accident, or damage to the product.
- Use a vacuum pump or Inert(nitrogen) gas when doing leakage test or air purge. Do not compress air or Oxygen and do not use Flammable gases. Otherwise, it may cause fire or explosion.
  - There is the risk of death, injury, fire or explosion.
- When installing and moving the air conditioner to another site, do not charge it with a different refrigerant from the refrigerant specified on the unit.
  - If a different refrigerant or air is mixed with the original refrigerant, the refrigerant cycle may malfunction and the unit may be damaged.
- Do not reconstruct to change the settings of the protection devices.
  - If the pressure switch, thermal switch, or other protection device is shorted and operated forcibly, or parts other than those specified by LGE are used, fire or explosion may result.
- Ventilate before operating air conditioner when gas leaked out.
  - It may cause explosion, fire, and burn.
- Securely install the cover of control box and the panel.
  - If the cover and panel are not installed securely, dust or water may enter the outdoor unit and fire or electric shock may result.
- If the air conditioner is installed in a small room, measures must be taken to prevent the refrigerant concentration from exceeding the safety limit when the refrigerant leaks.
  - Consult the dealer regarding the appropriate measures to prevent the safety limit from being exceeded. Should the refrigerant leak and cause the safety limit to be exceeded, hazards due to lack of oxygen in the room could result.

Operation

- Do not damage or use an unspecified power cord.
  - There is risk of fire, electric shock, explosion, or injury.
- Use a dedicated outlet for this appliance.
  - There is risk of fire or electrical shock.
- Be cautious that water could not enter the product.
  - There is risk of fire, electric shock, or product damage.
- Do not touch the power switch with wet hands.
  - There is risk of fire, electric shock, explosion, or injury.
- When the product is soaked (flooded or submerged), contact an Authorized Service Center.
  - There is risk of fire or electric shock.
- Be cautious not to touch the sharp edges when installing.
  - It may cause injury.
- Take care to ensure that nobody could step on or fall onto the outdoor unit.
  - This could result in personal injury and product damage.
- Do not open the inlet grille of the product during operation. (Do not touch the electrostatic filter, if the unit is so equipped.)
  - There is risk of physical injury, electric shock, or product failure.
- If the supply cord is damaged, it must be replaced by the manufacturer, its service agent or similarly qualified persons in order to avoid a hazard.

⚠ CAUTION

Installation

- Always check for gas (refrigerant) leakage after installation or repair of product.
  - Low refrigerant levels may cause failure of product.
- Do not install the product where the noise or hot air from the outdoor unit could damage the neighborhoods.
  - It may cause a problem for your neighbors.
- Keep level even when installing the product.
  - To avoid vibration or water leakage.
- Do not install the unit where combustible gas may leak.
  - If the gas leaks and accumulates around the unit, an explosion may result.
- Use power cables of sufficient current carrying capacity and rating.
  - Cables that are too small may leak, generate heat, and cause a fire.
- Do not use the product for special purposes, such as preserving foods, works of art, etc. It is a consumer air conditioner, not a precision refrigeration system.
  - There is risk of damage or loss of property.
- Keep the unit away from children. The heat exchanger is very sharp.
  - It can cause the injury, such as cutting the finger. Also the damaged fin may result in degradation of capacity.
- When installing the unit in a hospital, communication station, or similar place, provide sufficient protection against noise.
  - The inverter equipment, private power generator, high-frequency medical equipment, or radio communication equipment may cause the air conditioner to operate erroneously, or fail to operate. On the other hand, the air conditioner may affect such equipment by creating noise that disturbs medical treatment or image broadcasting.
- Do not install the product where it is exposed to sea wind (salt spray) directly.
  - It may cause corrosion on the product. Corrosion, particularly on the condenser and evaporator fins, could cause product malfunction or inefficient operation.
- Do not install the unit in potentially explosive atmospheres.

Operation

- Do not use the air conditioner in special environments.
  - Oil, steam, sulfuric smoke, etc. can significantly reduce the performance of the air conditioner or damage its parts.
- Do not block the inlet or outlet.
  - It may cause failure of appliance or accident.
- Make the connections securely so that the outside force of the cable may not be applied to the terminals.
  - Inadequate connection and fastening may generate heat and cause a fire.
- Be sure the installation area does not deteriorate with age.
  - If the base collapses, the air conditioner could fall with it, causing property damage, product failure, or personal injury.
- Install and insulate the drain hose to ensure that water is drained away properly based on the installation manual.
  - A bad connection may cause water leakage.
- Be very careful about product transportation.
  - Only one person should not carry the product if it weighs more than 20 kg.
  - Some products use PP bands for packaging. Do not use any PP bands for a means of transportation. It is dangerous.
  - Do not touch the heat exchanger fins. Doing so may cut your fingers.
  - When transporting the outdoor unit, suspending it at the specified positions on the unit base. Also support the outdoor unit at four points so that it cannot slip sideways.

- Safely dispose of the packing materials.
  - Packing materials, such as nails and other metal or wooden parts, may cause stabs or other injuries.
  - Tear apart and throw away plastic packaging bags so that children may not play with them. If children play with a plastic bag which was not torn apart, they face the risk of suffocation.
- Turn on the power at least 6 hours before starting operation.
  - Starting operation immediately after turning on the main power switch can result in severe damage to internal parts. Keep the power switch turned on during the operational season.
- Do not touch any of the refrigerant piping during and after operation.
  - It can cause a burn or frostbite.
- Do not operate the air conditioner with the panels or guards removed.
  - Rotating, hot, or high-voltage parts can cause injuries.
- Do not directly turn off the main power switch after stopping operation.
  - Wait at least 5 minutes before turning off the main power switch. Otherwise it may result in water leakage or other problems.
- Auto-addressing should be done in condition of connecting the power of all indoor and outdoor units. Auto-addressing should also be done in case of changing the indoor unit PCB.
- Use a firm stool or ladder when cleaning or maintaining the air conditioner.
  - Be careful and avoid personal injury.
- Do not insert hands or other objects through the air inlet or outlet while the air conditioner is plugged in.
  - There are sharp and moving parts that could cause personal injury.
- Appliance shall be disconnected from its power source during service and when replacing parts.
- Means for disconnection must be incorporated in the fixed wiring in accordance with the wiring rules.
- Mechanical connections (mechanical connectors or flared joints) shall be accessible for maintenance purposes.
  Pipe-work shall be protected from physical damage.
  When mechanical connectors are reused indoors, sealing parts shall be renewed.
  When flared joints are reused indoors, the flare part shall be re-fabricated.
  The appliance shall be installed in accordance with national wiring regulations.
  For installations with field applied mechanical joints which are exposed in the occupied space, the instructions shall state that a sensor shall be located
- Remote located within 2 m horizontal distance in line of sight of the unit and on a wall within the room in which the unit is installed; and
  - 100 mm above the floor where h0 is not more than 300 mm from the floor: or
  - 300 mm above the floor where h0 is greater than 300 mm from the floor.

The supply and return air shall be directly ducted to the space.

Open areas such as false ceilings shall not be used as a return air duct.
Servicing shall be performed only as recommended by the manufacturer.

Safety precautions for R32 model

	This appliance is filled with flammable refrigerant (for R32)
	This symbol indicates that the Operation Manual should be read carefully.
	This symbol indicates that a service personnel should be handling this equipment with reference to the Installation Manual.
	Read the precautions in this manual carefully before operating the unit.

- Do not use means to accelerate the defrosting process or to clean, other than those recommended by the manufacturer.
- The appliance shall be stored in a room without continuously operating ignition sources (for example: open flames, an operating gas appliance or an operating electric heater.)
- Do not pierce or burn.
- Be aware that refrigerants may not contain an odour.
- Keep any required ventilation openings clear of obstruction
- Auxiliary devices which may be a potential ignition source shall not be installed in the duct work. Examples of such potential ignition sources are hot surfaces with a temperature exceeding X°C and electric switching devices.
- Only auxiliary devices approved by the appliance manufacturer or declared suitable with the refrigerant shall be installed in connecting ductwork.
- The appliance shall be stored so as to prevent mechanical damage from occurring. The manufacturer should specify other potential continuously operating sources known to cause ignition of the refrigerant used.
- Compliance with national gas regulations shall be observed
- Refrigerant tubing shall be protected or enclosed to avoid damage.
- The installation of pipe-work shall be kept to a minimum
- A brazed, welded, or mechanical connection shall be made before opening the valves to permit refrigerant to flow between the refrigerating system parts.
- Any person who is involved with working on or breaking into a refrigerant circuit should hold a current valid certificate from an industry-accredited assessment authority, which authorises their competence to handle refrigerants safely in accordance with an industry recognised assessment specification.
- Servicing shall only be performed as recommended by the equipment manufacturer.
  Maintenance and repair requiring the assistance of other skilled personnel shall be carried out under the supervision of the person competent in the use of flammable refrigerants.
- Periodic cleaning of the dust of salt particles stuck on the heat exchanger by using water.
- Dismantling the unit, treatment of the refrigerant oil and eventual parts should be done in accrodance with local and national standards.

- Checks to the area
  Prior to beginning work on systems containing flammable refrigerants, safety checks are necessary to ensure that the risk of ignition is minimised. For repair to the refrigerating system, the following precautions shall be complied with prior to conducting work on the system.

- Work procedure
  Work shall be undertaken under a controlled procedure so as to minimise the risk of a flammable gas or vapour being present while the work is being performed.

- General work area
  All maintenance staff and others working in the local area shall be instructed on the nature of work being carried out. Work in confined spaces shall be avoided.

- Checking for presence of refrigerant
  The area shall be checked with an appropriate refrigerant detector prior to and during work, to ensure the technician is aware of potentially flammable atmospheres. Ensure that the leak detection equipment being used is suitable for use with flammable refrigerants, i.e. non-sparking, adequately sealed or intrinsically safe.

- Presence of fire extinguisher
  If any hot work is to be conducted on the refrigerating equipment or any associated parts, appropriate fire extinguishing equipment shall be available to hand. Have a dry powder or CO2 fire extinguisher adjacent to the charging area.

- No ignition sources
  No person carrying out work in relation to a refrigerating system which involves exposing any pipe work that contains or has contained flammable refrigerant shall use any sources of ignition in such a manner that it may lead to the risk of fire or explosion.
  All possible ignition sources, including cigarette smoking, should be kept sufficiently far away from the site of installation, repairing, removing and disposal, during which flammable refrigerant can possibly be released to the surrounding space.
  Prior to work taking place, the area around the equipment is to be surveyed to make sure that there are no flammable hazards or ignition risks. “No Smoking” signs shall be displayed.

- Checks to the refrigerating equipment
  Where electrical components are being changed, they shall be fit for the purpose and to the correct specification. At all times the manufacturer’s maintenance and service guidelines shall be followed. If in doubt consult the manufacturer’s technical department for assistance.

  The following checks shall be applied to installations using flammable refrigerants:
  - The actual refrigerant charge is in accordance with the room size within which the refrigerant containing parts are installed
  - The ventilation machinery and outlets are operating adequately and are not obstructed
  - If an indirect refrigerating circuit is being used, the secondary circuit shall be checked for the presence of refrigerant
  - Marking to the equipment continues to be visible and legible. Markings and signs that are illegible shall be corrected
  - Refrigerating pipe or components are installed in a position where they are unlikely to be exposed to any substance which may corrode refrigerant containing components, unless the components are constructed of materials which are inherently resistant to being corroded or are suitably protected against being so corroded.

- Checks to electrical devices
  Repair and maintenance to electrical components shall include initial safety checks and component inspection procedures.
  If a fault exists that could compromise safety, then no electrical supply shall be connected to the circuit until it is satisfactorily dealt with. If the fault cannot be corrected immediately but it is necessary to continue operation, an adequate temporary solution shall be used. This shall be reported to the owner of the equipment so all parties are advised.

  Initial safety checks shall include:
  - Capacitors are discharged: this shall be done in a safe manner to avoid possibility of sparking.
  - No live electrical components and wiring are exposed while charging, recovering or purging the system.
  - Continuity of earth bonding

- Repairs to sealed components

During repairs to sealed components, all electrical supplies shall be disconnected from the equipment being worked upon prior to any removal of sealed covers, etc.
If it is absolutely necessary to have an electrical supply to equipment during servicing, then a permanently operating form of leak detection shall be located at the most critical point to warn of a potentially hazardous situation.
Particular attention shall be paid to the following to ensure that by working on electrical components, the casing is not altered in such a way that the level of protection is affected.
This shall include damage to cables, excessive number of connections, terminals not made to original specification, damage to seals, incorrect fitting of glands, etc.
Ensure that apparatus is mounted securely.
Ensure that seals or sealing materials have not degraded such that they no longer serve the purpose of preventing the ingress of flammable atmospheres.
Replacement parts shall be in accordance with the manufacturer's specifications.

- Repair to intrinsically safe components

Do not apply any permanent inductive or capacitance loads to the circuit without ensuring that this will not exceed the permissible voltage and current permitted for the equipment in use.
Intrinsically safe components are the only types that can be worked on while live in the presence of a flammable atmosphere.
The test apparatus shall be at the correct rating. Replace components only with parts specified by the manufacturer.
Other parts may result in the ignition of refrigerant in the atmosphere from a leak.

NOTE: The use of silicon sealant can inhibit the effectiveness of some types of leak detection equipment. Intrinsically safe components do not have to be isolated prior to working on them.

- Decommissioning

Before carrying out this procedure, it is essential that the technician is completely familiar with the equipment and all its detail.
It is recommended good practice that all refrigerants are recovered safely.
Prior to the task being carried out, an oil and refrigerant sample shall be taken in case analysis is required prior to re-use of recovered refrigerant. It is essential that electrical power is available before the task is commenced.

a) Become familiar with the equipment and its operation.
b) Isolate system electrically.
c) Before attempting the procedure ensure that:
   - Mechanical handling equipment is available, if required, for handling refrigerant cylinders
   - All personal protective equipment is available and being used correctly
   - The recovery process is supervised at all times by a competent person
   - Recovery equipment and cylinders conform to the appropriate standards.
d) Pump down refrigerant system, if possible.
e) If a vacuum is not possible, make a manifold so that refrigerant can be removed from various parts of the system.
f) Make sure that cylinder is situated on the scales before recovery takes place.
g) Start the recovery machine and operate in accordance with manufacturer's instructions.
h) Do not overfill cylinders. (No more than 80 % volume liquid charge).
i) Do not exceed the maximum working pressure of the cylinder, even temporarily.
j) When the cylinders have been filled correctly and the process completed, make sure that the cylinders and the equipment are removed from site promptly and all isolation valves on the equipment are closed off.
k) Recovered refrigerant shall not be charged into another refrigerating system unless it has been cleaned and checked.

- Labelling

  Equipment shall be labelled stating that it has been de-commissioned and emptied of refrigerant. The label shall be dated and signed. Ensure that there are labels on the equipment stating the equipment contains flammable refrigerant.

- Ventilated area

  Ensure that the area is in the open or that it is adequately ventilated before breaking into the system or conducting any hot work. A degree of ventilation shall continue during the period that the work is carried out. The ventilation should safely disperse any released refrigerant and preferably expel it externally into the atmosphere.

- Cabling

  Cabling will not be subject to wear, corrosion, excessive pressure, vibration, sharp edges or any other adverse environmental effects. The check shall also take into account the effects of ageing or continual vibration from sources such as compressors or fans.

- Detection of flammable refrigerants

  Under no circumstances shall potential sources of ignition be used in the searching for or detection of refrigerant leaks. A halide torch (or any other detector using a naked flame) shall not be used.

- Leak detection methods

  The following leak detection methods are deemed acceptable for systems containing flammable refrigerants.

  Electronic leak detectors shall be used to detect flammable refrigerants, but the sensitivity may not be adequate, or may need re-calibration. (Detection equipment shall be calibrated in a refrigerant-free area.)

  Ensure that the detector is not a potential source of ignition and is suitable for the refrigerant used.

  Leak detection equipment shall be set at a percentage of the LFL of the refrigerant and shall be calibrated to the refrigerant employed and the appropriate percentage of gas (25 % maximum) is confirmed.

  Leak detection fluids are also suitable for use with most refrigerants but the use of detergents containing chlorine shall be avoided as the chlorine may react with the refrigerant and corrode the copper pipe-work.

  NOTE: Examples of leak detection fluids are
  - bubble method
  - fluorescent method agents

  If a leak is suspected, all naked flames shall be removed/extinguished.

  If a leakage of refrigerant is found which requires brazing, all of the refrigerant shall be recovered from the system, or isolated (by means of shut off valves) in a part of the system remote from the leak. Removal of refrigerant shall be according to removal and evacuation procedure.

- Removal and evacuation

  When breaking into the refrigerant circuit to make repairs - or for any other purpose – conventional procedures shall be used. However, for flammable refrigerants it is important that best practice is followed since flammability is a consideration.

  The following procedure shall be adhered to:
  - Remove refrigerant;
  - Purge the circuit with inert gas (optional for A2L);
  - Evacuate (optional for A2L);
  - Purge with inert gas (optional for A2L);
  - Open the circuit by cutting or brazing

  The refrigerant charge shall be recovered into the correct recovery cylinders. For appliances containing flammable refrigerants other than A2L refrigerants, the system shall be purged with oxygen-free nitrogen to render the appliance safe for flammable refrigerants. This process may need to be repeated several times.

Compressed air or oxygen shall not be used for purging refrigerant systems.

For appliances containing flammable refrigerants, other than A2L refrigerants, refrigerants purging shall be achieved by breaking the vacuum in the system with oxygen-free nitrogen and continuing to fill until the working pressure is achieved, then venting to atmosphere, and finally pulling down to a vacuum. This process shall be repeated until no refrigerant is within the system. When the final oxygen-free nitrogen charge is used, the system shall be vented down to atmospheric pressure to enable work to take place. This operation is absolutely vital if brazing operations on the pipe-work are to take place.

Ensure that the outlet for the vacuum pump is not close to any potential ignition sources and that ventilation is available.

- Charging procedures

In addition to conventional charging procedures, the following requirements shall be followed.

- Ensure that contamination of different refrigerants does not occur when using charging equipment. Hoses or lines shall be as short as possible to minimise the amount of refrigerant contained in them.
- Cylinders shall be kept in an appropriate position according to the instruction.
- Ensure that the refrigerating system is earthed prior to charging the system with refrigerant.
- Label the system when charging is complete (if not already).
- Extreme care shall be taken not to overfill the refrigerating system.

Prior to recharging the system, it shall be pressure tested with the appropriate purging gas. The system shall be leak-tested on completion of charging but prior to commissioning. A follow up leak test shall be carried out prior to leaving the site.

- Recovery

When removing refrigerant from a system, either for servicing or decommissioning, it is recommended good practice that all refrigerants are removed safely.

When transferring refrigerant into cylinders, ensure that only appropriate refrigerant recovery cylinders are employed.

Ensure that the correct number of cylinders for holding the total system charge are available. All cylinders to be used are designated for the recovered refrigerant and labelled for that refrigerant (i.e. special cylinders for the recovery of refrigerant).

Cylinders shall be complete with pressure relief valve and associated shut-off valves in good working order.

Empty recovery cylinders are evacuated and, if possible, cooled before recovery occurs. The recovery equipment shall be in good working order with a set of instructions concerning the equipment that is at hand and shall be suitable for the recovery of flammable refrigerants. In addition, a set of calibrated weighing scales shall be available and in good working order.

Hoses shall be complete with leak-free disconnect couplings and in good condition. Before using the recovery machine, check that it is in satisfactory working order, has been properly maintained and that any associated electrical components are sealed to prevent ignition in the event of a refrigerant release.

Consult manufacturer if in doubt. The recovered refrigerant shall be returned to the refrigerant supplier in the correct recovery cylinder, and the relevant Waste Transfer Note arranged.

Do not mix refrigerants in recovery units and especially not in cylinders. If compressors or compressor oils are to be removed, ensure that they have been evacuated to an acceptable level to make certain that flammable refrigerant does not remain within the lubricant.

The evacuation process shall be carried out prior to returning the compressor to the suppliers. Only electric heating to the compressor body shall be employed to accelerate this process. When oil is drained from a system, it shall be carried out safely.

- Qualification of workers

  The manual shall contain specific information about the required qualification of the working personnel for maintenance, service and repair operations. Every working procedure that affects safety means shall only be carried out by competent persons according to Annex HH.

  Examples for such working procedures are:

  - breaking into the refrigerating circuit;
  - opening of sealed components;
  - opening of ventilated enclosures.

ENGLISH

TABLE OF CONTENTS

2 TIPS FOR SAVING ENERGY

2 SAFETY INSTRUCTIONS

13 INSTALLATION PROCESS

13 OUTDOOR UNITS INFORMATION

14 ALTERNATIVE REFRIGERANT R410A

14 SELECT THE BEST LOCATION

15 INSTALLATION SPACE

16 Air guide work

17 LIFTING METHOD

17 INSTALLATION

17 The location of the Anchor bolts
18 Foundation for Installation
18 Preparation of Piping
20 Plumbing materials and storage methods

21 REFRIGERANT PIPING INSTALLATION

21 Precautions on Pipe connection / Valve operation
21 Caution

22 PIPE CONNECTIONS BETWEEN INDOOR AND OUTDOOR UNIT

22 Preparation Work
23 Pipe Drawing Out during Single / Series connection
23 Selection of Refrigerant Piping
24 Refrigerant piping system
27 Refrigerant charging
27 Distribution Method
28 Branch pipe Fitting
30 Leak Test and Vacuum drying
31 Vacuum Mode
31 Thermal insulation of refrigerant piping
32 Penetrations

32 ELECTRICAL WIRING

32 Caution
33 Control box and connecting position of wiring
34 Communication and Power Cables
34 Separation of communication and power cables
34 Wiring of main power supply and equipment capacity
35 Field Wiring
37 Installation of IO Module(optional)
37 Checking the setting of outdoor units
38 Automatic Addressing
39 Group Number setting
39 Cool & Heat selector
39 Static pressure compensation mode
40 Night Low Noise Function
40 Setting the ODU address
40 Snow removal & rapid defrost
40 Target pressure adjusting
41 Priority Heating Operation
41 Self-Diagnosis Function

43 SPECIAL REQUIREMENTS

43 Flow chart

46 CAUTION FOR REFRIGERANT LEAK

46 Introduction
46 Checking procedure of limiting concentration

47 INSTALLATION GUIDE AT THE SEASIDE

47 Anti-Corrosion Treatment
48 Model Designation
48 Airborne Noise Emission

INSTALLATION PROCESS

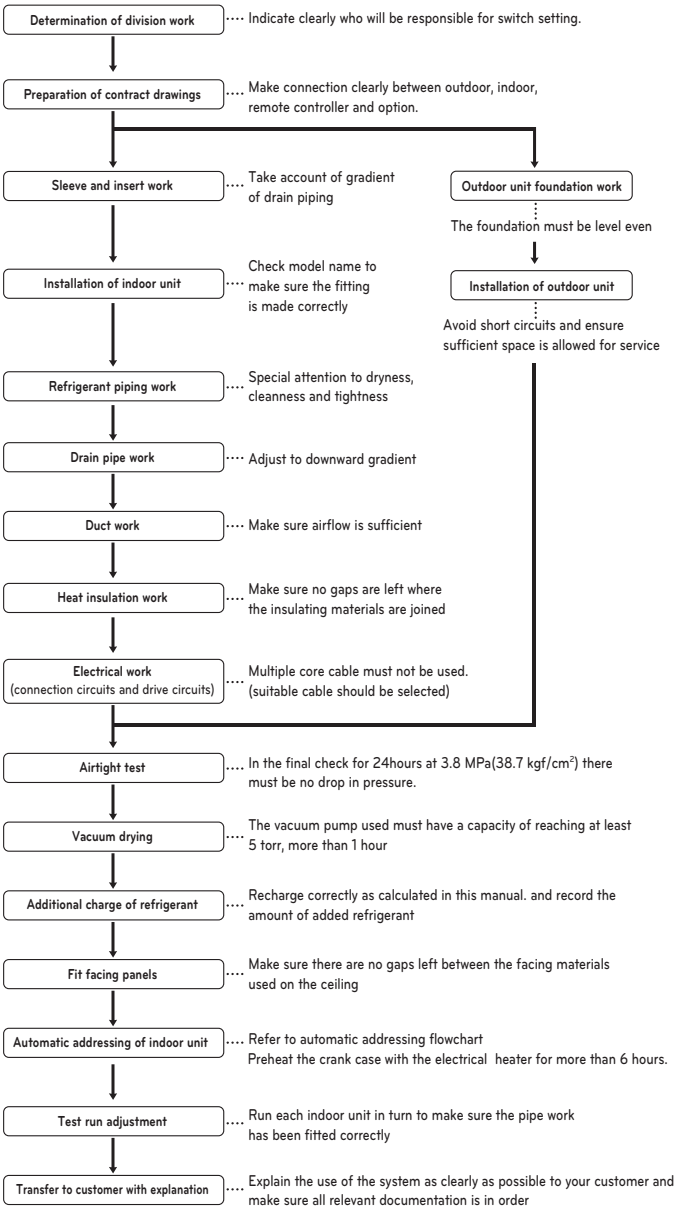

⚠ CAUTION

- The above list indicates the order in which the individual work operations are normally carried out but this order may be varied where local conditions warrants such change.
- The thickness of the piping should comply with the relevant local and national regulations for the designed pressure 3.8 MPa.
- Since R410A is a mixed refrigerant, the required additional refrigerant must be charged in its liquid state.(If the refrigerant is charged in its gaseous state, its composition changes and the system will not work properly.)

OUTDOOR UNITS INFORMATION

⚠ CAUTION

- Ratio of the connectable Indoor Units to the Outdoor: Within 50 ~ 160 %
- Ratio of running Indoor Units to the Outdoor: Within 10 ~ 100 %
- A combination operation over 100% cause to reduce each indoor unit capacity.

Power Supply : 3Ø, 380-415 V 3N, 50 Hz / 3Ø, 380 V 3N, 60 Hz

System(HP)			4	5	6
Model			ARUN040LSR0	ARUN050LSR0	ARUN060LSR0
			ARUN040LSS0	ARUN050LSS0	ARUN060LSS0
Refrigerant Precharged Amount		kg	3	3	3
		lbs	6.6	6.6	6.6
Net weight		kg	96	96	96
		lbs	212	212	212
Dimensions (WxHxD)		mm	950 x 1 380 x 330	950 x 1 380 x 330	950 x 1 380 x 330
		inch	37.4 x 54.3 x 13.0	37.4 x 54.3 x 13.0	37.4 x 54.3 x 13.0
Piping Connections	Liquid Pipes	mm(inch)	Ø 9.52(3/8)	Ø 9.52(3/8)	Ø 9.52(3/8)
	Gas Pipes	mm(inch)	Ø 15.88(5/8)	Ø 15.88(5/8)	Ø 19.05(3/4)

System(HP)			8	10	12
Model			ARUN080LSR0	ARUN100LSR0	ARUN120LSR0
			ARUN080LSS0	ARUN100LSS0	ARUN120LSS0
Refrigerant Precharged Amount		kg	3.5	4.5	6
		lbs	7.7	9.9	13.2
Net weight		kg	115	144	157
		lbs	254	317	346
Dimensions (WxHxD)		mm	950 x 1 380 x330	1 090 x 1 625 x 380	1 090 x 1 625 x 380
		inch	37.4 x 54.3 x 13.0	42.9 x 64.0 x 15.0	42.9 x 64.0 x 15.0
Piping Connections	Liquid Pipes	mm(inch)	Ø 9.52(3/8)	Ø 9.52(3/8)	Ø 12.7(1/2)
	Gas Pipes	mm(inch)	Ø 19.05(3/4)	Ø 22.2(7/8)	Ø 28.58(11/8)

System(HP)			8	10	12
Model			ARUN080LSS5	ARUN100LSS5	ARUN120LSS5
Refrigerant Precharged Amount		kg	3.5	4.5	6
		lbs	7.7	9.9	13.2
Net weight		kg	114	139	152
		lbs	251	306	335
Dimensions (WxHxD)		mm	950 x 1 380 x330	1 090 x 1 625 x 380	1 090 x 1 625 x 380
		inch	37.4 x 54.3 x 13.0	42.9 x 64.0 x 15.0	42.9 x 64.0 x 15.0
Piping Connections	Liquid Pipes	mm(inch)	Ø 9.52(3/8)	Ø 9.52(3/8)	Ø 12.7(1/2)
	Gas Pipes	mm(inch)	Ø 19.05(3/4)	Ø 22.2(7/8)	Ø 28.58(11/8)

System(HP)			8	10	12
Model			ZRUN080LSS0	ZRUN100LSS0	ZRUN120LSS0
Refrigerant Precharged Amount		kg	3.2	3.9	4.7
		lbs	7.05	8.6	10.36
Net weight		kg	113.7	138.4	150.7
		lbs	250.7	305.1	332.2
Dimensions (WxHxD)		mm	950 x 1 380 x 330	1 090 x 1 625 x 380	1 090 x 1 625 x 380
		inch	37.4 x 54.3 x 13.0	42.9 x 64.0 x 15.0	42.9 x 64.0 x 15.0
Piping Connections	Liquid Pipes	mm(inch)	Ø 9.52 (3/8)	Ø 9.52 (3/8)	Ø 12.7 (1/2)
	Gas Pipes	mm(inch)	Ø 19.05 (3/4)	Ø 22.22 (7/8)	Ø 28.58 (11/8)

Power Supply : 1Ø, 220-240 V~, 50Hz / 1Ø, 220 V, 60 Hz

System(HP)			4	5	6
Model			ARUN040GSR0	ARUN050GSR0	ARUN060GSR0
			ARUN040GSS0	ARUN050GSS0	ARUN060GSS0
Refrigerant Precharged Amount		kg	1.8	3	3
		lbs	4	6.6	6.6
Net weight		kg	70	94	94
		lbs	154	207	207
Dimensions (WxHxD)		mm	950 × 834 × 330	950 × 1 380 × 330	950 × 1 380 × 330
		inch	37.4 x 32.8 x 13.0	37.4 x 54.3 x 13.0	37.4 x 54.3 x 13.0
Piping Connections	Liquid Pipes	mm(inch)	Ø 9.52(3/8)	Ø 9.52(3/8)	Ø 9.52(3/8)
	Gas Pipes	mm(inch)	Ø 15.88(5/8)	Ø 15.88(5/8)	Ø 19.05(3/4)

ALTERNATIVE REFRIGERANT R410A

The refrigerant R410A has the property of higher operating pressure in comparison with R22.
Therefore, all materials have the characteristics of higher resisting pressure than R22 ones and this characteristic should be also considered during the installation.
R410A is an azeotrope of R32 and R125 mixed at 50:50, so the ozone depletion potential (ODP) of R410A is 0.

⚠ CAUTION

- The wall thickness of the piping should comply with the relevant local and national regulations for the designed pressure 3.8 MPa
- Since R410A is a mixed refrigerant, the required additional refrigerant must be charged in its liquid state.
  If the refrigerant is charged in its gaseous state, its composition changes and the system will not work properly.
- Do not place the refrigerant container under the direct rays of the sun to prevent it from exploding.
- For high-pressure refrigerant, any unapproved pipe must not be used.
- Do not heat pipes more than necessary to prevent them from softening.
- Be careful not to install wrongly to minimize economic loss because it is expensive in comparison with R22.

SELECT THE BEST LOCATION

Select space for installing outdoor unit, which will meet the following conditions:

- No direct thermal radiation from other heat sources
- No possibility of annoying neighbors by noise from unit
- No exposition to strong wind
- With strength which bears weight of unit
- Note that drain flows out of unit when heating
- With space for air passage and service work shown next
- Because of the possibility of fire, do not install unit to the space where generation, inflow, stagnation, and leakage of combustible gas is expected.
- Avoid unit installation in a place where acidic solution and spray (sulfur) are often used.
- Do not use unit under any special environment where oil, steam and sulfuric gas exist.
- It is recommended to fence round the outdoor unit in order to prevent any person or animal from accessing the outdoor unit.
- If installation site is area of heavy snowfall, then the following directions should be observed.
  - Make the foundation as high as possible.
  - Fit a snow protection hood.

Select installation location considering following conditions to avoid bad condition when additionally performing defrost operation.

- Install the outdoor unit at a place well ventilated and having a lot of sunshine in case of installing the product at a place with a high humidity in winter (near beach, coast, lake, etc).
  (Ex) Rooftop where sunshine always shines.
- Performance of heating will be reduced and preheat time of the indoor unit may be lengthened in case of installing the outdoor unit in winter at following location:
  - Shade position with a narrow space
  - Location with much moisture in neighboring floor.
  - Location with much humidity around.
  - Location where ventilation is good. It is recommended to install the outdoor unit at a place with a lot of sunshine as possible as.
  - Location where water gathers since the floor is not even.

When installing the outdoor unit in a place that is constantly exposed to a strong wind like a coast or on a high story of a building, secure a normal fan operation by using a duct or a wind shield.

- Install the unit so that its discharge port faces to the wall of the building.
  Keep a distance 500mm or more between the unit and the wall surface.
- Supposing the wind direction during the operation season of the air conditioner, install the unit so that the discharge port is set at right angle to the wind direction.

[Unit : mm]

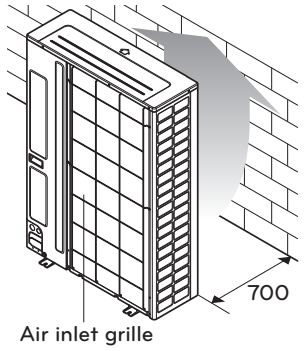

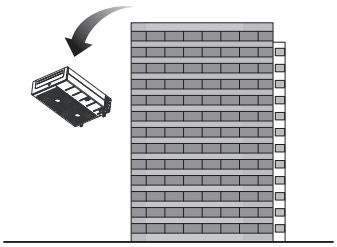

Turn the air outlet side toward the building's wall, fence or windbreak screen.

⚠ WARNING

Fix the outdoor unit firmly with anchor bolt or it may fall and hurt people. (refer to 'Foundation for installation')

INSTALLATION SPACE

- The following values are the least space for installation. If any service area is needed for service according to field circumstance, obtain enough service space.
- The unit of values is mm.

In case of obstacles on the suction side

1. Stand alone installation

[Unit:mm]

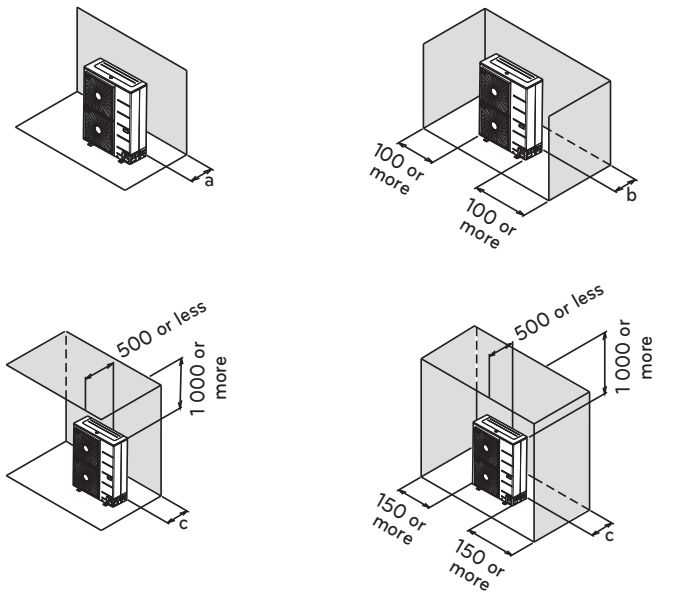

2. Collective installation

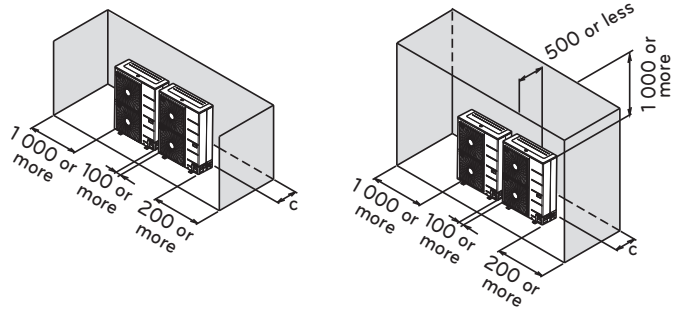

[Unit:mm]

	4 HP, 5 HP 6 HP, 8 HP	10 HP 12 HP
a	100 or more	200 or more
b	100 or more	300 or more
c	300 or more	350 or more

In case of obstacles on the discharge side

1. Stand alone installation

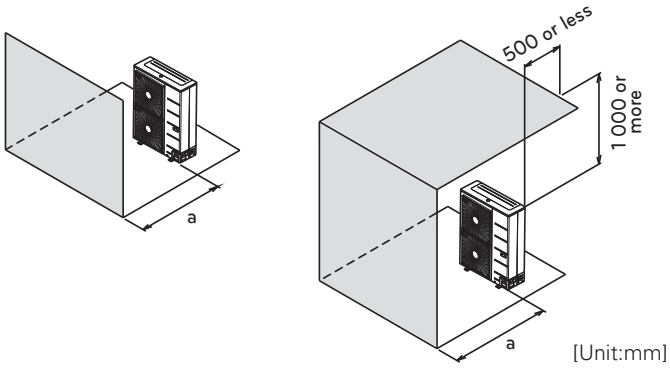

[Unit:mm]

2. Collective installation

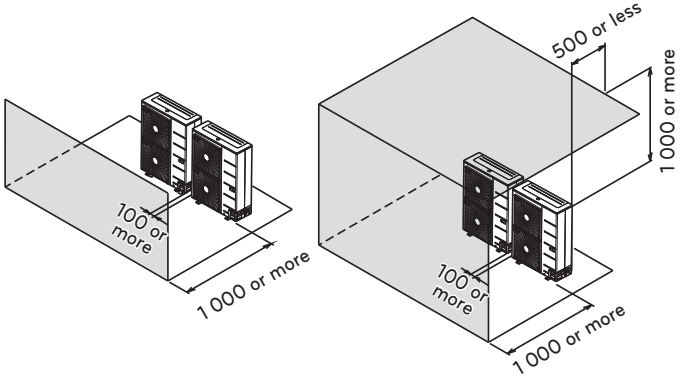

[Unit:mm]

	4 HP, 5 HP 6 HP, 8 HP	10 HP 12 HP
a	500 or more	700 or more

In case of obstacles on the suction and the discharge side

Obstacle height of discharge side is higher than the unit

1. Stand alone installation

L > H

L > H

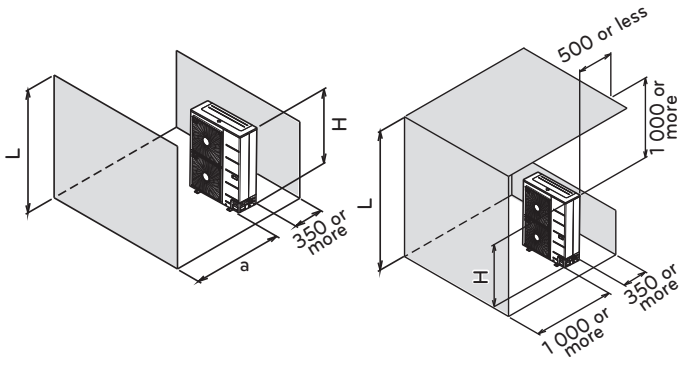

[Unit:mm]

2. Collective installation

L > H

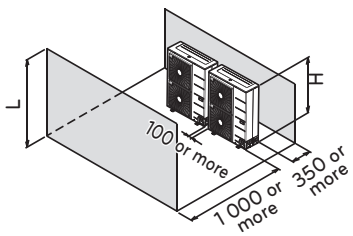

L > H

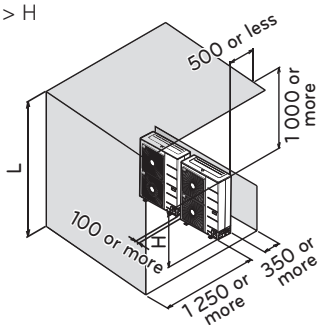

[Unit:mm]

	4 HP, 5 HP 6 HP, 8 HP	10 HP 12 HP
a	500 or more	700 or more

Obstacle height of discharge side is lower than the unit

1. Stand alone installation

L ≤ H

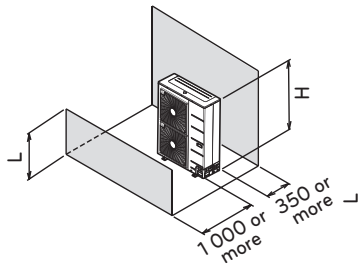

L ≤ H

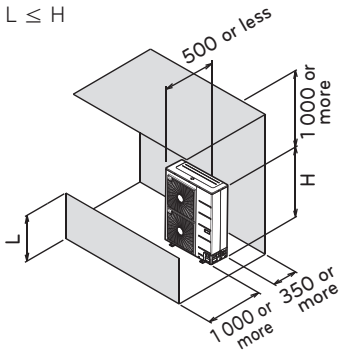

[Unit:mm]

2. Collective installation

L ≤ H

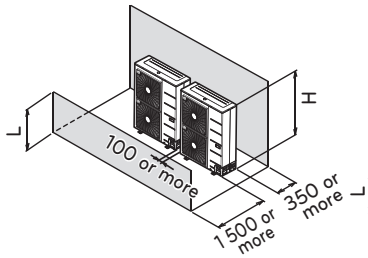

L ≤ H

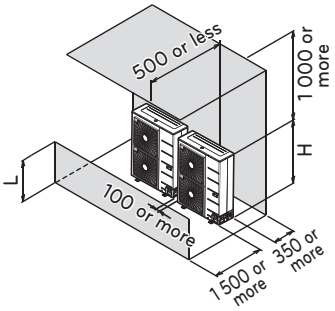

[Unit:mm]

Seasonal wind and cautions in winter

- Sufficient measures are required in a snow area or severe cold area in winter so that product can be operated well.
- Get ready for seasonal wind or snow in winter even in other areas.
- Install a suction and discharge duct not to let in snow or rain.
- Install the outdoor unit not to come in contact with snow directly. If snow piles up and freezes on the air suction hole, the system may malfunction. If it is installed at snowy area, attach the hood to the system.
- The raised support platform must be high enough to allow the unit to remain above possible snow drifts, and must be higher than the maximum anticipated snowfall for the location.
- Where snow accumulated on the upper part of the Outdoor Unit by more than 10 cm, always remove snow for operation.

- Don't install the suction hole and discharge hole of the Outdoor Unit facing the seasonal wind.

Air guide work

In case of out door unit is located outdoor cabin of apartment or flats, then the efficiency can drop and system pressure increases thus finally damaging the compressor or other components in the system by heat short circuit.

- Do not use bended louver. It disturbs the air circulation.
- The opening ratio is at least 80%
- Louver angle is 0-20 degree
- Louver pitch will be as more than 100mm
- If you have a insect control net, consider the shielded area and static pressure loss
- Check the static pressure range of outdoor unit fan. Then, install air guide in the range of static pressure.

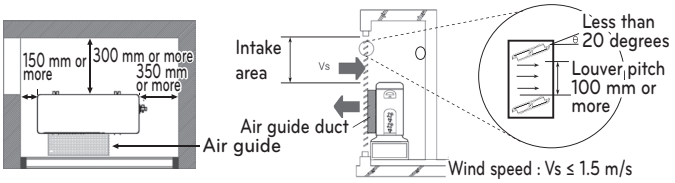

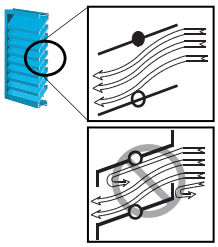

Secure minimum intake area

When the intake area is not secured can efficiency drop and products may not be operating

Minimum intake area (For reference)

Model	1Ø 4HP	1Ø 5HP 1Ø 6HP 3Ø 4HP 3Ø 5HP 3Ø 6HP 3Ø 8HP 3Ø 10HP 3Ø 12HP
Minimum intake area (m^2)	0.7	1.2

LIFTING METHOD

- When carrying the suspended, unit pass the ropes between legs of base panel under the unit.
- Always lift the unit with ropes attached at four points so that impact is not applied to the unit.
- Attach the ropes to the unit at an angle Ⓐ of 40° or less.
- Use only accessories and parts which are of the designated specification when installing.

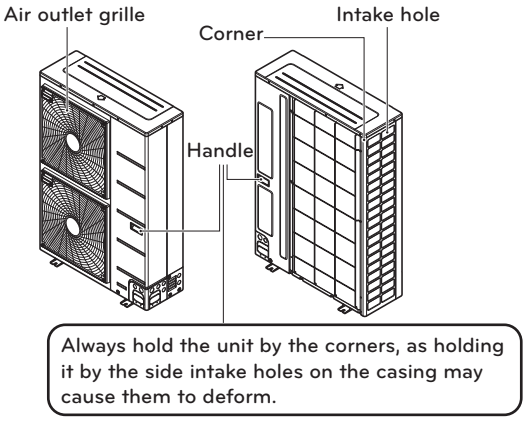

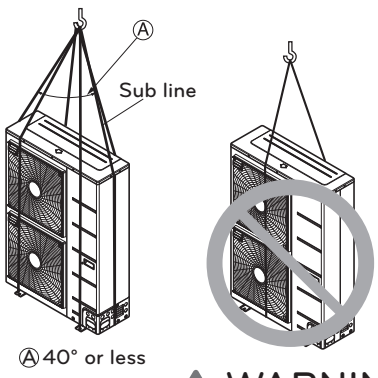

⚠ WARNING

⚠ CAUTION

Be very careful while carrying the product.

- Do not have only one person carry product if it is more than 20 kg.
- PP bands are used to pack some products. Do not use them as a mean for transportation because they are dangerous.
- Do not touch heat exchanger fins with your bare hands. Otherwise you may get a cut in your hands.
- Tear plastic packaging bag and scrap it so that children cannot play with it. Otherwise plastic packaging bag may suffocate children to death.
- When carrying in Outdoor Unit, be sure to support it at four points. Carrying in and lifting with 3-point support may make Outdoor Unit unstable, resulting in a fall.
- Use 2 belts of at least 8 m long.
- Place extra cloth or boards in the locations where the casing comes in contact with the sling to prevent damage.
- Hoist the unit making sure it is being lifted at its center of gravity.

INSTALLATION

- Install at places where it can endure the weight and vibration/noise of the outdoor unit.
- The outdoor unit supports at the bottom shall have width of at least 100 mm under the Unit's legs before being fixed.
- The outdoor unit supports should have minimum height of 200 mm.
- Anchor bolts must be inserted at least 75mm.

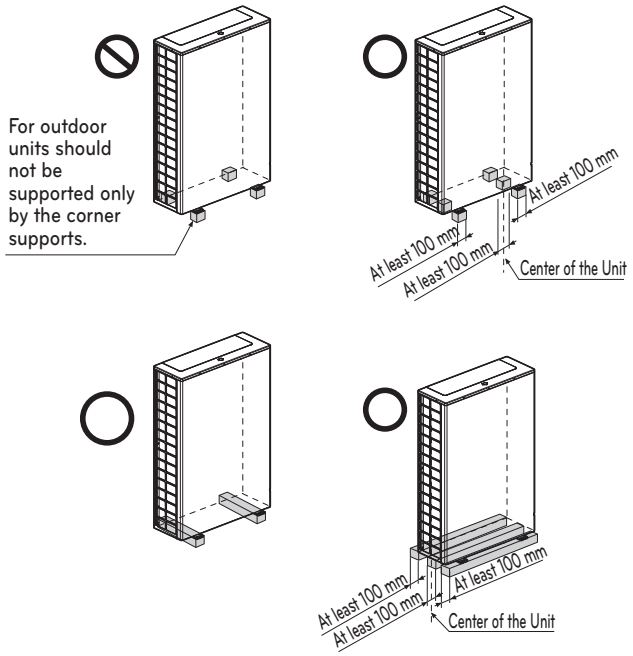

The location of the Anchor bolts

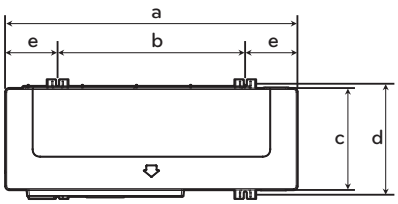

[Unit : mm]

	4 HP, 5 HP 6 HP, 8 HP	10 HP 12 HP
a	920	1,090
b	618	700
c	330	380
d	360	401
e	151	195

Foundation for Installation

- Fix the unit tightly with bolts as shown below so that unit will not fall down due to earthquake or gust.
- Use the H-beam support as a base support
- Noise and vibration may occur from the floor or wall since vibration is transferred through the installation part depending on installation status. Thus, use anti-vibration materials (cushion pad) fully (The base pad shall be more than 200 mm).

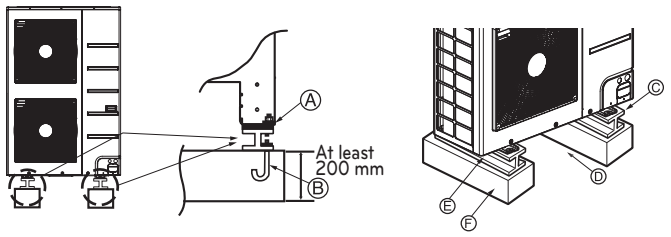

Ⓐ The corner part must be fixed firmly. Otherwise, the support for the installation may be bent.

Ⓑ Get and use M10 Anchor bolt.

Ⓒ Put Cushion Pad between the outdoor unit and ground support for the vibration protection in wide area.

Ⓓ Space for pipes and wiring (Pipes and wirings for bottom side)

Ⓔ H-beam support

Ⓕ Concrete support

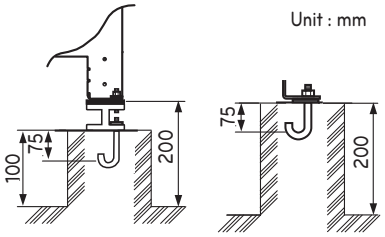

⚠ WARNING

- Install where it can sufficiently support the weight of the outdoor unit.
  If the support strength is not enough, the outdoor unit may drop and hurt people.
- Install where the outdoor unit may not fall in strong wind or earthquake.
  If there is a fault in the supporting conditions, the outdoor unit may fall and hurt people.
- Please take extra cautions on the supporting strength of the ground, water outlet treatment(treatment of the water flowing out of the outdoor unit in operation), and the passages of the pipe and wiring, when making the ground support.
- Do not use tube or pipe for water outlet in the Base pan. Use drainage instead for water outlet. The tube or pipe may freeze and the water may not be drained.

⚠ CAUTION

- Be sure to remove the Pallet(Wood Support) of the bottom side of the outdoor unit Base Pan before fixing the bolt. It may cause the unstable state of the outdoor settlement, and may cause freezing of the heat exchanger resulting in abnormal operations.
- Be sure to remove the Pallet(Wood Support) of the bottom side of the outdoor unit before welding. Not removing Pallet(Wood Support) causes hazard of fire during welding.

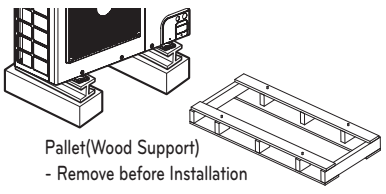

Preparation of Piping

Main cause of gas leakage is defect in flaring work. Carry out correct flaring work in the following procedure.

Cut the pipes and the cable

- Use the accessory piping kit or the pipes purchased locally.
- Measure the distance between the indoor and the outdoor unit.
- Cut the pipes a little longer than measured distance.
- Cut the cable 1.5m longer than the pipe length.

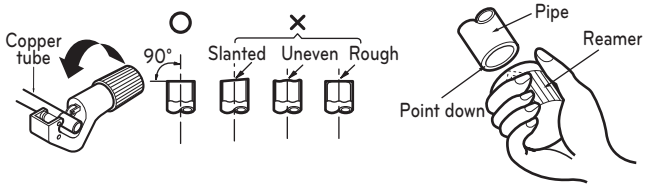

Burrs removal

- Completely remove all burrs from the cut cross section of pipe/tube.
- Put the end of the copper tube/pipe to downward direction as you remove burrs in order to avoid to let burrs drop in the tubing.

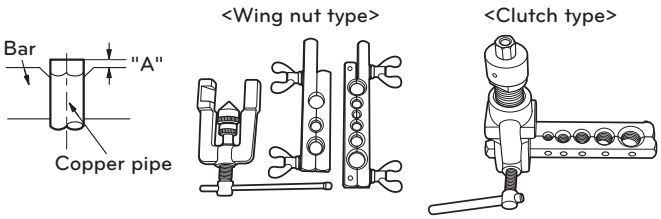

Flaring work

- Carry out flaring work using flaring tool as shown below.

Pipe diameter Inch (mm)	A inch (mm)	
	Wing nut type	Clutch type
Ø 1/4 (Ø 6.35)	0.04~0.05 (1.1~1.3)	0~0.02 (0~0.5)
Ø 3/8 (Ø 9.52)	0.06~0.07 (1.5~1.7)	
Ø 1/2 (Ø 12.7)	0.06~0.07 (1.6~1.8)	
Ø 5/8 (Ø 15.88)	0.06~0.07 (1.6~1.8)	
Ø 3/4 (Ø 19.05)	0.07~0.08 (1.9~2.1)	

Firmly hold copper tube in a bar(or die) as indicated dimension in the table above.

Check

- Compare the flared work with figure below.
- If flare is noted to be defective, cut off the flared section and do flaring work again.

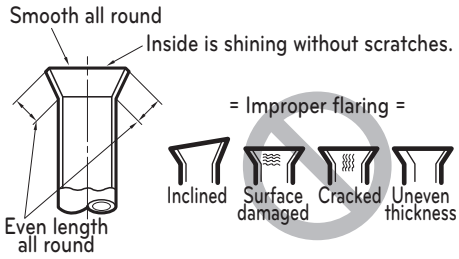

Flare shape and flare nut tightening torque

Precautions when connecting pipes

- See the following table for flare part machining dimensions.
- When connecting the flare nuts, apply refrigerant oil to the inside and outside of the flares and turn them three or four times at first. (Use ester oil or ether oil.)
- See the following table for tightening torque.(Applying too much torque may cause the flares to crack.)
- After all the piping has been connected, use nitrogen to perform a gas leak check.
- Only Annealed pipe should be used for flared joint.
- The outside diameter of pipe should be smaller than 20 mm.

Pipe size	Tightening torque(N·m)	A(mm)	Flare shape
Ø 9.52	38±4	12.8-13.2	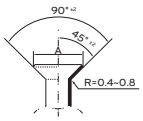
Ø 12.7	55±6	16.2-16.6	
Ø 15.88	75±7	19.3-19.7	

⚠ CAUTION

- Always use a charge hose for service port connection.
- After tightening the cap, check that no refrigerant leaks are present.
- When loosening a flare nut, always use two wrenches in combination, When connecting the piping, always use a spanner and torque wrench in combination to tighten the flare nut.
- When connecting a flare nut, coat the flare(inner and outer faces) with oil for R410A (PVE), R32 and hand tighten the nut 3 to 4 turns as the initial tightening.

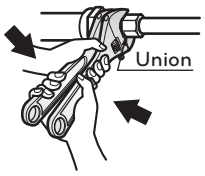

Opening shutoff valve

1 Remove the cap and turn the valve counter clockwise with the hexagon wrench.

2 Turn it until the shaft stops.
Do not apply excessive force to the shutoff valve. Doing so may break the valve body, as the valve is not a backseat type. Always use the special tool.

3 Make sure to tighten the cap securely.

Closing shutoff valve

1 Remove the cap and turn the valve clockwise with the hexagon wrench.

2 Securely tighten the valve until the shaft contacts the main body seal.

3 Make sure to tighten the cap securely.
* For the tightening torque, refer to the table on the below.

Tightening torque

Shutoff valve size	Tightening torque N·m (Turn clockwise to close)						
	Shaft (valve body)			Cap (Valve lid)	Service port	Flare nut	Gas line piping attached to unit
	Closed	Opened	Hexagonal wrench				
Ø 6.35	6.0±0.6	5.0±0.0	4 mm	17.6±2.0	12.7±2	16±2	-
Ø 9.52						38±4	
Ø 12.7	10.0±1.0			20.0±2.0		55±6	
Ø 15.88	12.0±1.2		5 mm	25.0±2.5		75±7	
Ø 19.05	14.0±1.4					110±10	
Ø 22.2	30.0±3.0		8mm			-	
Ø 25.4							25±3

Insulation of shutoff valve

1 Use the heat insulation material for the refrigerant piping which has an excellent heat-resistance (over 120 °C).

2 Precautions in high humidity circumstance:
This air conditioner has been tested according to the "ISO Conditions with Mist" and confirmed that there is not any default. However, if it is operated for a long time in high humid atmosphere (dew point temperature: more than 23 °C), water drops are liable to fall. In this case, add heat insulation material according to the following procedure:
- Heat insulation material to be prepared... EPDM (Ethylene Propylene Diene Methylene)-over 120 °C the heat-resistance temperature.
- Add the insulation over 10mm thickness at high humidity environment.

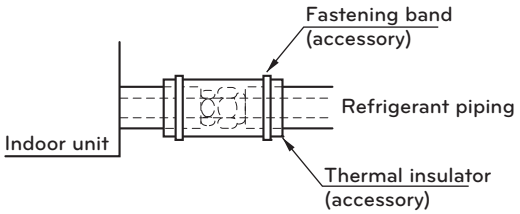

Plumbing materials and storage methods

Pipe must be able to obtain the specified thickness and should be used with low impurities.
Also when handling storage, pipe must be careful to prevent a fracture, deformity and wound.
Should not be mixed with contaminations such as dust, moisture.

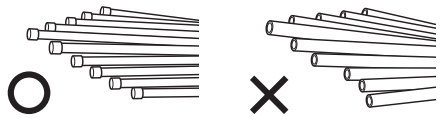

Refrigerant piping on three principles

	Drying	Cleanliness	Airtight
	Should be no moisture inside	No dust inside.	There is no refrigerant leakage
Items			
Cause failure	- Significant hydrolysis of refrigerant oil - Degradation of refrigerant oil - Poor insulation of the compressor - Do not cold and warm - Clogging of EEV, Capillary	- Degradation of refrigerant oil - Poor insulation of the compressor - Do not cold and warm - Clogging of EEV, Capillary	- Gas shortages - Degradation of refrigerant oil - Poor insulation of the compressor - Do not cold and warm
Countermeasure	- No moisture in the pipe - Until the connection is completed, the plumbing pipe entrance should be strictly controlled. - Stop plumbing at rainy day. - Pipe entrance should be taken side or bottom. - When removal burr after cutting pipe, pipe entrance should be taken down. - Pipe entrance should be fitted cap when pass through the walls.	- No dust in the pipe. - Until the connection is completed, the plumbing pipe entrance should be strictly controlled. - Pipe entrance should be taken side or bottom. - When removal burr after cutting pipe, pipe entrance should be taken down. - Pipe entrance should be fitted cap when pass through the walls.	- Airtightness test should be. - Brazing operations to comply with standards. - Flare to comply with standards. - Flange connections to comply with standards.

Nitrogen substitution method

Welding, as when heating without nitrogen substitution a large amount of the oxide film is formed on the internal piping.

The oxide film is a caused by clogging EEV, Capillary, oil hole of accumulator and suction hole of oil pump in compressor.

It prevents normal operation of the compressor.

In order to avoid this problem, Welding should be done after replacing air by nitrogen gas.

When welding plumbing pipe, the work is required.

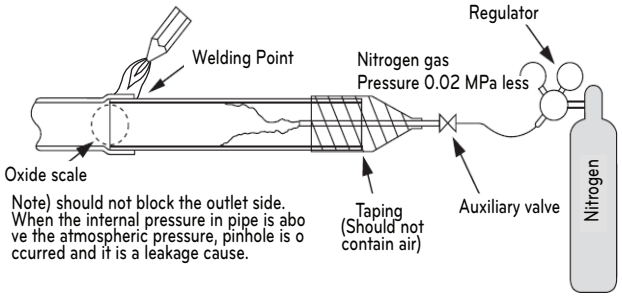

⚠ CAUTION

- Always use the nitrogen.
  (not use oxygen, carbon dioxide, and a Chevron gas)
  Please use the following nitrogen pressure 0.02 MPa (2.9 psi)
  - Oxygen: Promotes oxidative degradation of refrigerant oil.
    Because it is flammable, it is strictly prohibited to use.
  - Carbon dioxide: Degrade the drying characteristics of gas
  - Chevron Gas: Toxic gas occurs when exposed to direct flame
- Always use a pressure reducing valve.
- Please do not use commercially available antioxidant.
  The residual material seems to be the oxide scale is observed.
  In fact, due to the organic acids generated by oxidation of the alcohol contained in the anti-oxidants, ants nest corrosion occurs. (Causes of organic acid ⟶ alcohol + copper + water + temperature)

REFRIGERANT PIPING INSTALLATION

Precautions on Pipe connection / Valve operation

Pipe connection is done by connecting from the end of the pipe to the branching pipes, and the refrigerant pipe coming out of the outdoor unit is divided at the end to connect to each indoor unit. Flare connection for the indoor unit, and welding connection for the outdoor pipe and the branching parts.

- Use hexagonal wrench to open/close the valve.

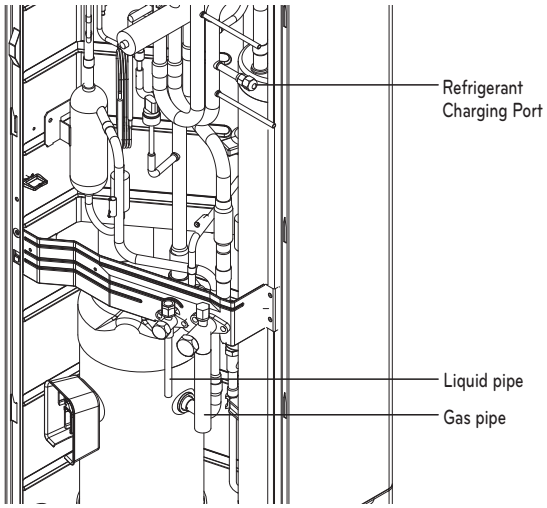

※ Pictures may differ depending on the model.

⚠ WARNING

- Always careful not to leak the refrigerant during welding.
- The refrigerant generates poisonous gas harmful to human body if combusted.
- Do not perform welding in a closed space.
- Be sure to close the cap of the service port to prevent gas leakage after the work.

⚠ CAUTION

Please block the pipe knock outs of the front and side panels after installing the pipes.
(Animals or foreign objects may be brought in to damage wires.)

Caution

1 Use the following materials for refrigerant piping.
- Material: Seamless phosphorous deoxidized copper pipe
- Wall thickness : Comply with the relevant local and national regulations for the designed pressure 3.8 MPa (551 psi). We recommend the following table as the minimum wall thickness.

Outer diameter [mm(inch)]	6.35 (1/4)	9.52 (3/8)	12.7 (1/2)	15.88 (5/8)	19.05 (3/4)	22.2 (7/8)	25.4 (1)
Minimum thickness [mm(inch)]	0.8 (0.03)	0.8 (0.03)	0.8 (0.03)	0.99 (0.04)	0.99 (0.04)	0.99 (0.04)	0.99 (0.04)
Outer diameter [mm(inch)]	28.58 (1-1/8)	31.8 (1-1/4)	34.9 (1-3/8)	38.1 (1-1/2)	41.3 (1-5/8)	44.45 (1-3/4)	53.98 (2-1/8)
Minimum thickness [mm(inch)]	0.99 (0.04)	1.1 (0.04)	1.21 (0.05)	1.35 (0.05)	1.43 (0.06)	1.55 (0.06)	2.1 (0.08)

2 Commercially available piping often contains dust and other materials. Always blow it clean with a dry inert gas.

3 Use care to prevent dust, water or other contaminants from entering the piping during installation.

4 Reduce the number of bending portions as much as possible, and make bending radius as big as possible.

5 Always use the branch piping set shown below, which are sold separately.

Y branch	Header		
	4 branches	7 branches	10 branches
ARBLB01621, ARBLB03321, ARBLB07121, ARBLB14521, ARBLB23220	ARBL054	ARBL057	ARBL1010
	ARBL104	ARBL107	ARBL2010

6 If the diameters of the branch piping of the designated refrigerant piping differs, use a pipe cutter to cut the connecting section and then use an adapter for connecting different diameters to connect the piping.

7 Always observe the restrictions on the refrigerant piping (such as rated length, difference in height, and piping diameter).
Failure to do so can result in equipment failure or a decline in heating/cooling performance.

8 A second branch cannot be made after a header.
(These are shown by ⃠.)

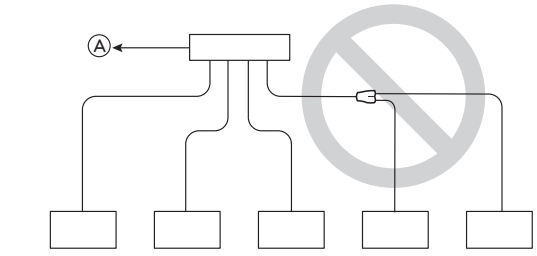

Ⓐ To Outdoor Unit
Ⓑ Sealed Piping

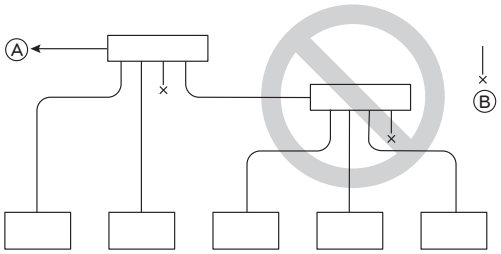

9 The Multi V will stop due to an abnormality like excessive or insufficient refrigerant. At such a time, always properly charge the unit. When servicing, always check the notes concerning both the piping length and the amount of additional refrigerant.

10 Never perform a pump down. This will not only damage the compressor but also deteriorate the performance.

11 Never use refrigerant to perform an air purge. Always evacuate air by using a vacuum pump.

12 Always insulate the piping properly. Insufficient insulation will result in a decline in heating/cooling performance, drip of condensate and other such problems.

13 When connecting the refrigerant piping, make sure the service valves of the Outdoor Unit is completely closed (the factory setting) and do not operate it until the refrigerant piping for the Outdoor and Indoor Units has been connected, a refrigerant leakage test has been performed and the evacuation process has been completed.

14 Always use a non-oxidizing brazing material for brazing the parts and do not use flux. If not, oxidized film can cause clogging or damage to the compressor unit and flux can harm the copper piping or refrigerant oil.

⚠ WARNING

When installing and moving the air conditioner to another site, be sure to make recharge refrigerant after perfect evacuation.

- If a different refrigerant or air is mixed with the original refrigerant, the refrigerant cycle may malfunction and the unit may be damaged.
- After selecting diameter of the refrigerant pipe to suit total capacity of the indoor unit connected after branching, use an appropriate branch pipe set according to the pipe diameter of the indoor unit and the installation pipe drawing.

PIPE CONNECTIONS BETWEEN INDOOR AND OUTDOOR UNIT

- Pipe connections can be done on the front side or on the side according to the installation environments.
- Be sure to let 0.2 kgf/cm^2 Nitrogen flow in the pipe when welding.
- If Nitrogen was not flown during welding, many oxidized membranes may form inside the pipe and disturb the normal operations of valves and condensers.

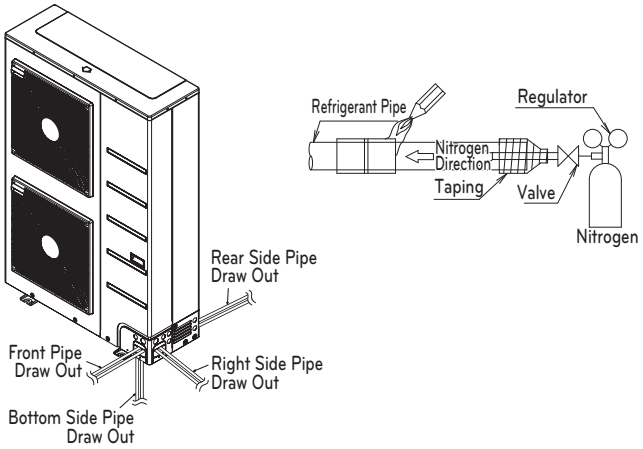

Preparation Work

- Use Knock Outs of Base Pan of the outdoor unit for Left/Right or Bottom pipe drawing outs.

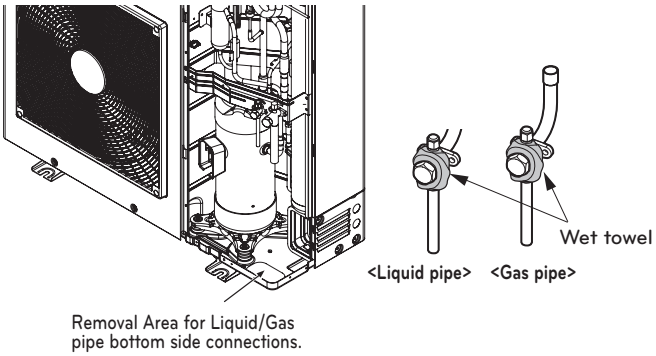

Removal Area for Liquid/Gas pipe bottom side connections.

⚠ CAUTION

- Do not give damage to the pipe/base during the Knock Out work.
- Proceed to pipe work after removing burr after Knock Out work.
- Perform sleeve work to prevent damage to the wire when connecting wires using knock Outs.

Remove leakage prevention cap

- Remove the leakage prevention cap attached to the outdoor unit service valve before pipe work.
- Proceed the leakage prevention cap removal as follows:
  - Verify whether the liquid/gas pipes are locked.
  - Extract remaining refrigerant or air inside using the service port.
  - Remove the leakage prevention cap

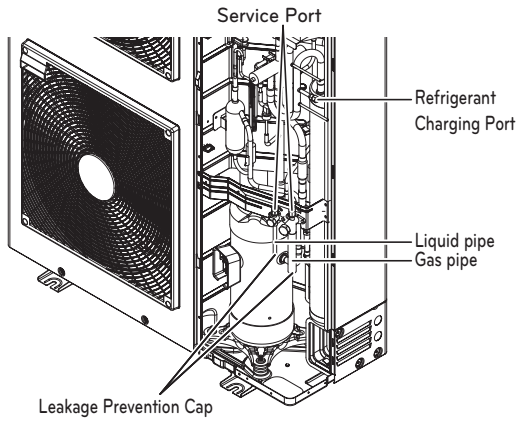

Pipe Drawing Out during Single / Series connection

Method of drawing out pipes on the front side and right side

- Proceed with the pipe work as shown in the below figure for front side and right side pipe drawing out.

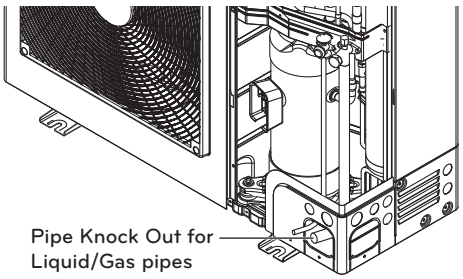

Method of drawing out pipes on the bottom side

- Drawing out common pipe through base panel

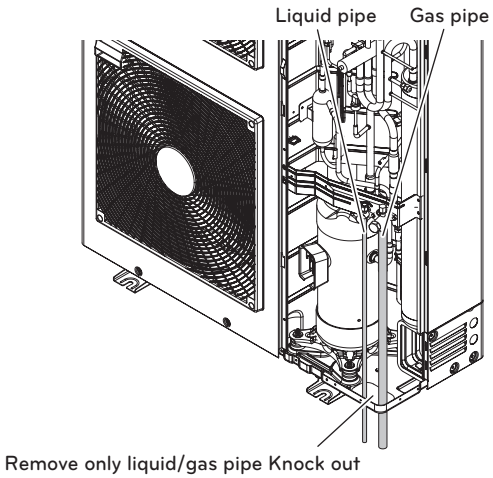

Method of drawing out pipes on the rear side

- Proceed with the pipe work as shown in the below figure for rear side pie drawing out.

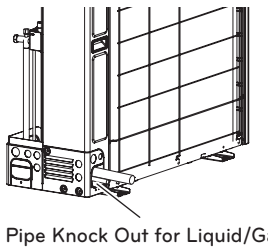

※ Pictures may differ depending on the model.

Selection of Refrigerant Piping

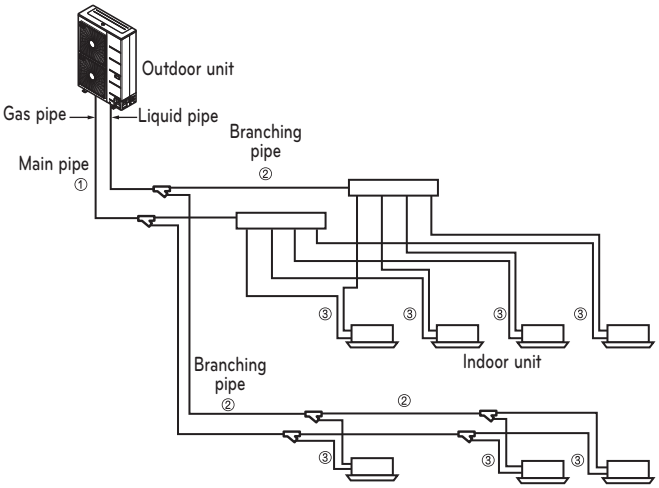

Piping parts	① Outdoor unit → 1st branching section ② Branching section → Branching section ③ Branching section → Indoor unit
Name	① Main pipe ② Branching pipe ③ Indoor unit connecting pipe
Selection of pipe size	① Size of main pipe

Outdoor unit capacity[HP]	Liquid pipe [mm(inch)]	Gas pipe [mm(inch)]
4	Ø 9.52(3/8)	Ø 15.88(5/8)
5	Ø 9.52(3/8)	Ø 15.88(5/8)
6	Ø 9.52(3/8)	Ø 19.05(3/4)
8	Ø 9.52(3/8)	Ø 19.05(7/8)
10	Ø 9.52(3/8)	Ø 22.2(7/8)
12	Ø 12.7(1/2)	Ø 28.58(11/8)

② Pipe size of between branching sections

Indoor unit capacity [kW(Btu/h)]	Liquid pipe [mm(inch)]	Gas pipe [mm(inch)]
≤ 5.6(19 100)	Ø 6.35(1/4)	Ø 12.7(1/2)
< 16.0(54 600)	Ø 9.52(3/8)	Ø 15.88(5/8)
< 22.4(76 400)	Ø 9.52(3/8)	Ø 19.05(3/4)
< 36.4(124 200)	Ø 9.52(3/8)	Ø 22.2(7/8)

③ Connecting pipe size of indoor unit

Indoor unit capacity [kW(Btu/h)]	Liquid pipe [mm(inch)]	Gas pipe [mm(inch)]
≤ 5.6(19 100)	Ø 6.35(1/4)	Ø 12.7(1/2)
< 16.0(54 600)	Ø 9.52(3/8)	Ø 15.88(5/8)
≤ 22.4(76 400)	Ø 9.52(3/8)	Ø 19.05(3/4)
≤ 28.0(95 900)	Ø 9.52(3/8)	Ø 22.2(7/8)

Refrigerant piping system

Y branch method

Example : 5 Indoor Units connected
Ⓐ : Outdoor Unit
Ⓑ : 1st branch (Y branch)
Ⓒ : Indoor Units

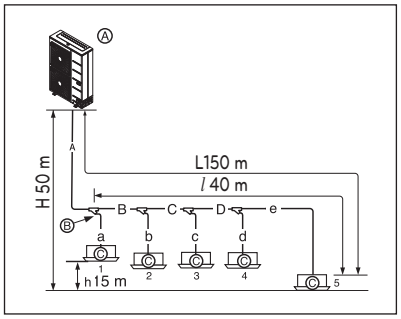

Total pipe length = A+B+C+D+a+b+c+d+e ≤ 300m

L	Longest pipe length	Equivalent pipe length(*)
	A+B+C+D+e ≤ 150 m	A+B+C+D+e ≤ 175 m
l	Longest pipe length after 1st branch	
	B+C+D+e ≤ 40 m	
H	Difference in height (Outdoor Unit ↔ Indoor Unit)	
	H ≤ 50 m (40 m : Outdoor Unit is lower than Indoor Units)	
h	Difference in height (Indoor Unit ↔ Indoor Unit)	
	h ≤ 15 m	

- * : Assume equivalent pipe length of Y branch to be 0.5 m, that of header to be 1m, calculation purpose

Refrigerant pipe diameter from outdoor unit to first branch. (A)

Outdoor unit total capacity (HP)	Liquid pipe [mm(inch)]	Gas pipe [mm(inch)]
4	Ø 9.52(3/8)	Ø 15.88(5/8)
5	Ø 9.52(3/8)	Ø 15.88(5/8)
6	Ø 9.52(3/8)	Ø 19.05(3/4)
8	Ø 9.52(3/8)	Ø 19.05(3/4)
10	Ø 9.52(3/8)	Ø 22.2(7/8)
12	Ø 12.7(1/2)	Ø 28.58(11/8)

Refrigerant pipe diameter from branch to branch (B,C,D)

Downward Indoor Unit total capacity [kW(Btu/h)]	Liquid pipe [mm(inch)]	Gas pipe [mm(inch)]
≤ 5.6(19 100)	Ø 6.35(1/4)	Ø 12.7(1/2)
< 16.0(54 600)	Ø 9.52(3/8)	Ø 15.88(5/8)
≤ 22.4(76 400)	Ø 9.52(3/8)	Ø 19.05(3/4)
< 36.4(124 200)	Ø 9.52(3/8)	Ø 22.2(7/8)

⚠ WARNING

When the any one (or both) of below conditions are satisfied, the diameter of main pipe (A) must be increased according to below table.

- The equivalent length between outdoor unit and the farthest indoor unit is 90m or more (Liquid and Gas pipes are increased)
- The level difference (Outdoor unit ↔ Indoor unit) is 50m or more (Only liquid pipe is increased)

Header Method

Example : 6 Indoor Units connected
Ⓐ : Outdoor Unit
Ⓑ : Header
Ⓒ : Indoor Units
Ⓓ : Sealed piping

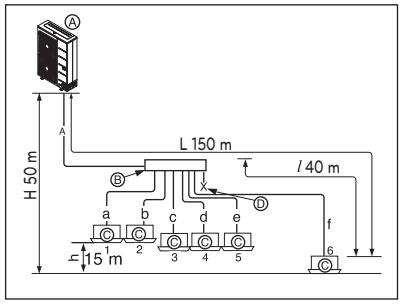

Total pipe length = A+a+b+c+d+e+f ≤ 300m

L	Longest pipe length	Equivalent pipe length(*)
	A+f ≤ 150 m	A+f ≤ 175 m
l	Longest pipe length after 1st branch	
	f ≤ 40 m	
H	Difference in height (Outdoor Unit ↔ Indoor Unit)	
	H ≤ 50 m (40 m : Outdoor Unit is lower than Indoor Units)	
h	Difference in height (Indoor Unit ↔ Indoor Unit)	
	h ≤ 15 m	

⚠ WARNING

Pipe length after header branching (a~f)

It is recommended that difference in length of the pipes connected to the Indoor Units is minimized. Performance difference between Indoor Units may occur.

- * : Assume equivalent piping length of Y branch to be 0.5 m, that of header to be 1m, calculation purpose
- Indoor Unit should be installed at lower position than the header.

Combination of Y branch/header Method

Example : 5 Indoor Units connected
Ⓐ : Outdoor Unit
Ⓑ : 1st branch (Y branch)
Ⓒ : Y branch
Ⓓ : Indoor Unit
Ⓔ : Header
Ⓕ : Sealed piping

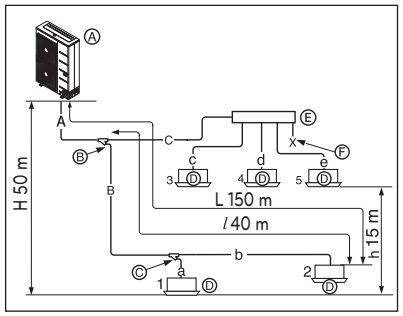

Branch pipe can not be used after header

Total pipe length = A+B+C+a+b+c+d+e ≤ 300 m

L	Longest pipe length	Equivalent pipe length(*)
	A+B+b ≤ 150 m	A+B+b ≤ 175 m
l	Longest pipe length after 1st branch	
	B+b ≤ 40 m	
H	Difference in height (Outdoor Unit ↔ Indoor Unit)	
	H ≤ 50 m (40 m : Outdoor Unit is lower than Indoor Units)	
h	Difference in height (Indoor Unit ↔ Indoor Unit)	
	h ≤ 15 m	

- * : Assume equivalent pipe length of Y branch to be 0.5 m, that of header to be 1 m, calculation purpose
- Indoor Unit should be installed at lower position than the header.

⚠ WARNING

- It is recommended that difference of piping length for pipes connected to the Indoor Unit is minimized. Performance difference between Indoor Units may occur.
- When the any one (or both) of below conditions are satisfied, the diameter of main pipe (A) must be increased according to below table.
  - The equivalent length between outdoor unit and the farthest indoor unit is 90 m or more (Liquid and Gas pipes are increased)

Refrigerant pipe diameter from outdoor unit to first branch. (A)

Outdoor unit total capacity(HP)	Liquid pipe [mm(inch)]	Gas pipe [mm(inch)]
4	Ø 9.52(3/8)	Ø 15.88(5/8)
5	Ø 9.52(3/8)	Ø 15.88(5/8)
6	Ø 9.52(3/8)	Ø 19.05(3/4)
8	Ø 9.52(3/8)	Ø 19.05(3/4)
10	Ø 9.52(3/8)	Ø 22.2(7/8)
12	Ø 12.7(1/2)	Ø 28.58(11/8)

Refrigerant pipe diameter from branch to branch (B,C)

Downward Indoor Unit total capacity [kW(Btu/h)]	Liquid pipe [mm(inch)]	Gas pipe [mm(inch)]
≤ 5.6(19 100)	Ø 6.35(1/4)	Ø 12.7(1/2)
< 16.0(54 600)	Ø 9.52(3/8)	Ø 15.88(5/8)
≤ 22.4(76 400)	Ø 9.52(3/8)	Ø 19.05(3/4)
< 36.4(124 200)	Ø 9.52(3/8)	Ø 22.2(7/8)

Outdoor unit Connection

⚠ WARNING

- In case of pipe diameter B connected after first branch is bigger than the main pipe diameter A, B should be of the same size with A.

Ex) In case indoor unit combination ratio 120 % is connected to 24 HP(67.2 kW) outdoor unit.
1) Outdoor unit main pipe diameter A : Ø 34.9(Gas pipe), Ø 15.88(liquid pipe)
2) Pipe diameter B after first branch according to 120 % indoor unit combination(80.6kW) : Ø 34.9(gas pipe), Ø 19.05(liquid pipe)

Therefore, pipe diameter B connected after first branch would be Ø 34.9(gas pipe) / Ø 15.88(liquid pipe) which is same with main pipe diameter.

[Example]
Do not choose the main pipe diameter by downward indoor unit total capacity but its outdoor unit model name.
Do not let the connection pipe from branch to branch exceed the main pipe diameter chosen by outdoor unit model name.

EX) Where connecting the indoor units to the 22 HP (61.6 kW) outdoor unit to 130 % of its system capacity (80.1 kW) and branching 7 k (2.2 kW) indoor unit at the 1st branch.
1) Main pipe diameter(22 HP outdoor unit): Ø 28.58(gas pipe), Ø 15.88(Liquid pipe)
2) Pipe diameter between 1st and 2nd branch (77.9 kW indoor units) : Ø 34.9(Gas pipe), Ø 19.05(Liquid pipe) in conformity with downward indoor units.

Since the main pipe diameter of 22 HP outdoor unit is Ø 28.58(gas pipe), Ø 15.88(Liquid pipe) is used as the main pipe and the connection pipe between 1st and 2nd branch.

Indoor Unit Connection

Indoor Unit connecting pipe from branch (a,b,c,d,e,f)

Indoor Unit capacity [kW(Btu/h)]	Liquid pipe [mm(inch)]	Gas pipe [mm(inch)]
≤ 5.6(19 100)	Ø 6.35(1/4)	Ø 12.7(1/2)
< 16.0(54 600)	Ø 9.52(3/8)	Ø 15.88(5/8)
< 22.4(76 400)	Ø 9.52(3/8)	Ø 19.05(3/4)
< 28.0(95 900)	Ø 9.52(3/8)	Ø 22.2(7/8)

⚠ CAUTION

- Bending radius should be at least twice the diameter of the pipe.
- Bend pipe after 500 mm or more from branch(or header).
  Do not bend U type.
  It may cause Performance unsatisfactory or noise.
- If want U type, bending R is more than 200 mm.

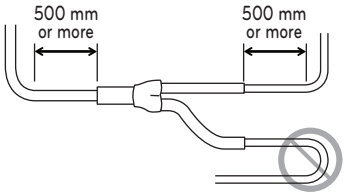

The amount of Refrigerant (R410A)

The calculation of the additional charge should take into account the length of pipe and CF(correction Factor) value of indoor unit.

Additional charge(kg)	=	Total liquid pipe : Ø 25.4 mm	x 0.480 (kg/m)
	+	Total liquid pipe : Ø 22.2 mm	x 0.354 (kg/m)
	+	Total liquid pipe : Ø 19.05 mm	x 0.266 (kg/m)
	+	Total liquid pipe : Ø 15.88 mm	x 0.173 (kg/m)
	+	Total liquid pipe : Ø 12.7 mm	x 0.118 (kg/m)
	+	Total liquid pipe : Ø 9.52 mm	x 0.061 (kg/m)
	+	Total liquid pipe : Ø 6.35 mm	x 0.022 (kg/m)
	+	CF value of indoor unit (kg)	

Amount refrigerant of Indoor units

Example) 4 Way Ceiling Cassette 14.5 kW - 1 ea,
Ceiling concealed Duct 7.3 kW - 2 ea,
Wall Mounted 2.3 kW - 4 ea
CF = 0.64 × 1 + 0.26 × 2 + 0.24 × 4 = 2.12 kg

Attach the additional refrigerant table of IDU.

The amount of Refrigerant (R32)

The calculation of the additional charge should take into account the length of pipe and CF(correction Factor) value of indoor unit.

Additional charge(kg)	=	Total liquid pipe : Ø 25.4 mm	× 0.422 (kg/m)
	+	Total liquid pipe : Ø 22.2 mm	× 0.313 (kg/m)
	+	Total liquid pipe : Ø 19.05 mm	× 0.235 (kg/m)
	+	Total liquid pipe : Ø 15.88 mm	× 0.153 (kg/m)
	+	Total liquid pipe : Ø 12.7 mm	× 0.103 (kg/m)
	+	Total liquid pipe : Ø 9.52 mm	× 0.053 (kg/m)
	+	Total liquid pipe : Ø 6.35 mm	× 0.019 (kg/m)
	+	Number of installed HR units (2,3,4 port)	× 0.45 (kg)
	+	Number of installed HR units (6,8 port)	× 0.9 (kg)
	+	CF value of indoor unit	

Amount refrigerant of Indoor units

Example) 4 Way Ceiling Cassette 14.5 kW - 1ea,
Ceiling concealed Duct 7.3 kW - 2 ea,
Wall Mounted 2.3 kW - 4ea
CF = 0.41 × 1 + 0.3 × 2 + 0.2 × 4 = 1.81 kg

Attach the additional refrigerant table of IDU.

⚠ CAUTION

Use only 2-series of indoor unit. Ex) ARNU***2
Do not connect Hydrokit with Multi V S Models.

⚠ WARNING

- Regulation for refrigerant leakage
  - The amount of refrigerant leakage should satisfy the following equation for human safety.

$$\frac{\text{Total amount of refrigerant in the system}}{\text{Volume of the room at which Indoor Unit of the least capacity is installed}} \leq 0.44\ (kg/m^3)$$

If the above equation can not be satisfied, then follow the following steps.

- Selection of air conditioning system: select one of the next
  - Installation of effective opening part
  - Reconfirmation of Outdoor Unit capacity and piping length
  - Reduction of the amount of refrigerant
  - Installation of 2 or more security device (alarm for gas leakage)
- Change Indoor Unit type
  - Installation position should be over 2 m from the floor (Wall mounted type → Cassette type)
- Adoption of ventilation system
  - Choose ordinary ventilation system or building ventilation system
- Limitation in piping work
  - Prepare for earthquake and thermal stress

Refrigerant charging

Ⓐ Manifold Gauge
Ⓑ Low pressure side Handle
Ⓒ High pressure side Handle

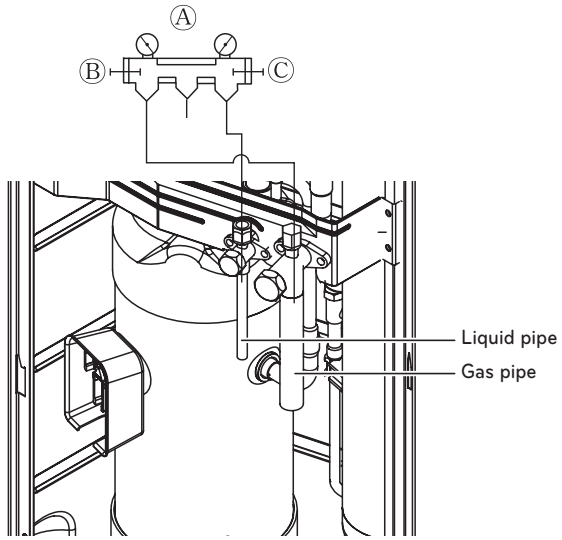

⚠ WARNING

- Pipe to be vacuumed : gas pipe, liquid pipe
- If the refrigerant amount is not exact, it may not operate properly.
- If additionally bottled refrigerant amount is over 10 %, condenser burst or insufficient indoor unit performance may be caused.

Distribution Method

Horizontal Distribution

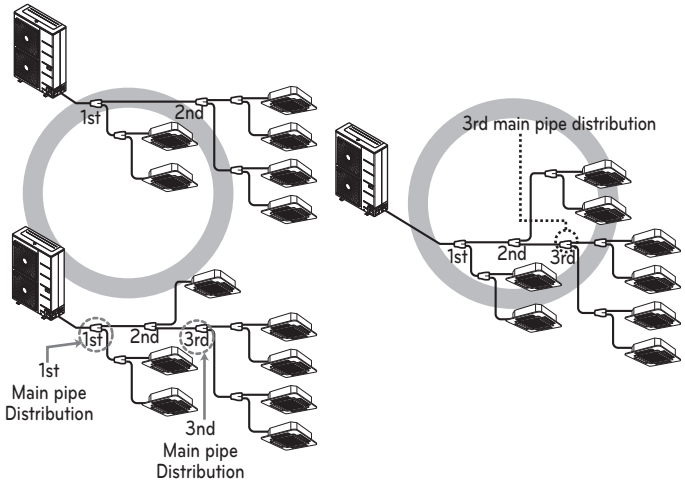

Vertical Distribution

- Ensure that the branch pipes are attached vertically.

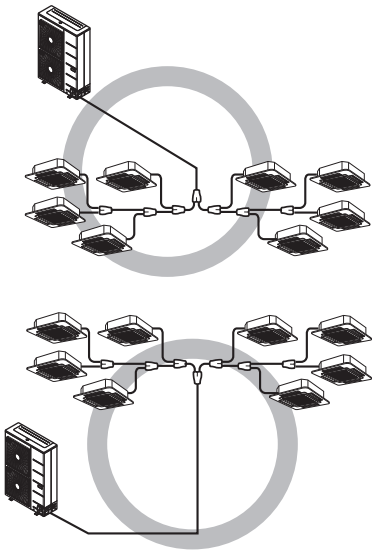

The others

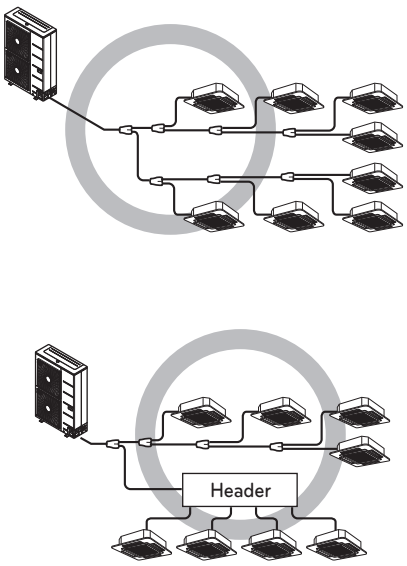

Branch pipe Fitting

Y branch

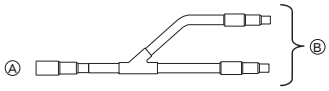

- Ensure that the branch pipes are attached horizontally or vertically (see the diagram below.)

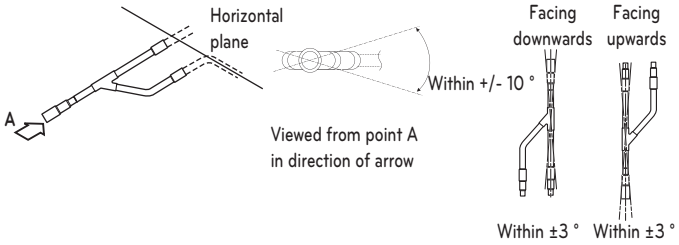

- There is no limitation on the joint mounting configuration.
- If the diameter of the refrigerant piping selected by the procedures described is different from the size of the joint, the connecting section should be cut with a pipe cutter.
- Branch pipe should be insulated with the insulator in each kit.

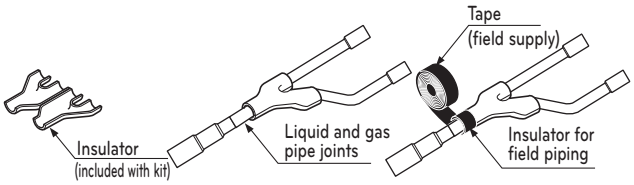

Header

- The indoor unit having larger capacity must be installed closer to Ⓐ than smaller one.
- If the diameter of the refrigerant piping selected by the procedures described is different from the size of the joint, the connecting section should be cut with a pipe cutter.

Ⓐ To Outdoor Unit
Ⓑ To Indoor Unit

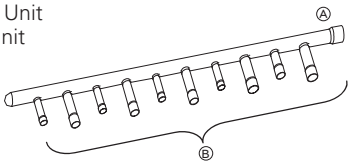

- When the number of pipes to be connected is smaller than the number of header branches, install a cap to the unconnected branches.

Ⓒ Pipe cutter

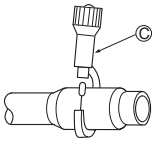

- When the number of indoor units to be connected to the branch pipes is less than the number of branch pipes available for connection then cap pipes should be fitted to the surplus branches.

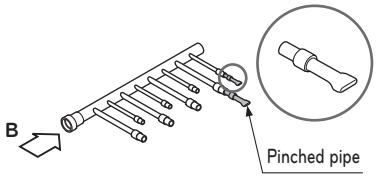

- Fit branch pipe lie in a horizontal plane.

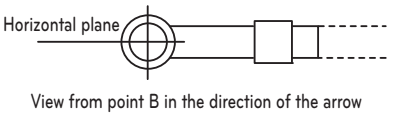

- Header should be insulated with the insulator in each kit.

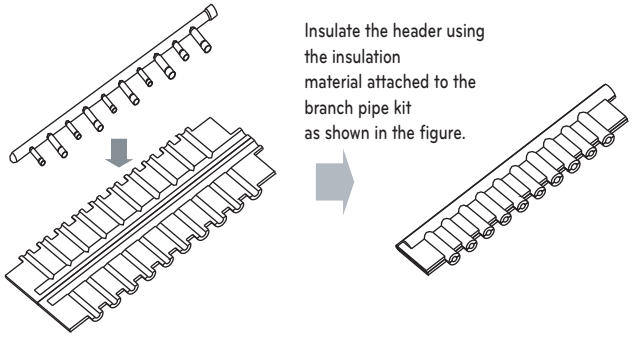

- Joints between branch and pipe should be sealed with the tape included in each kit.

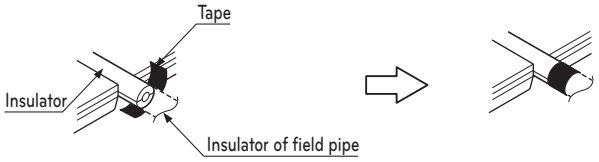

- Any cap pipe should be insulated using the insulator provided with each kit and then taped as described above.

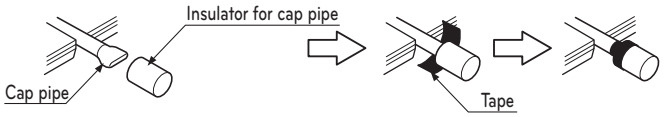

Y branch pipe

[unit:mm]

Models	Gas pipe	Liquid pipe
ARBLN 01621	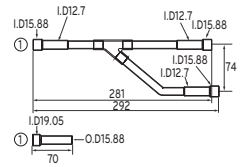	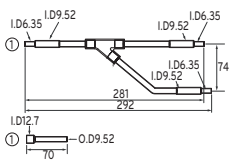
ARBLN 03321	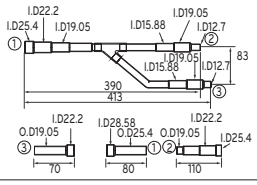	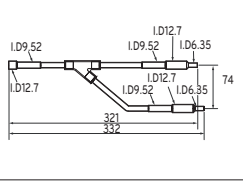
ARBLN 07121	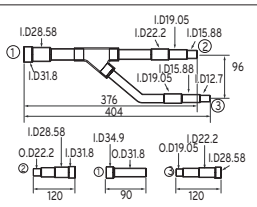	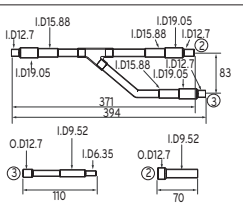
ARBLN 14521	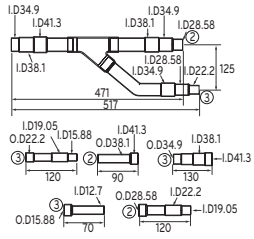	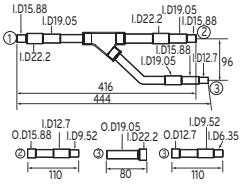
ARBLN 23220	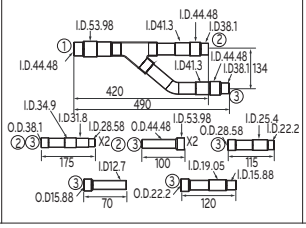	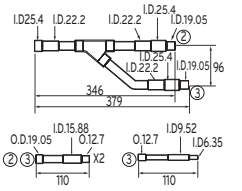

* For more information, refer accessory installation manual.

Header

[unit:mm]

Models	Gas pipe	Liquid pipe
4 branch ARBL054	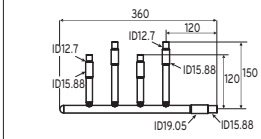	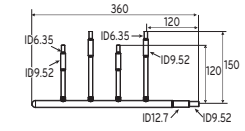
7 branch ARBL057	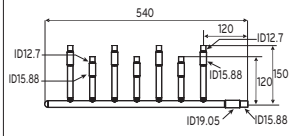	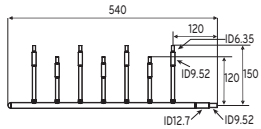
4 branch ARBL104	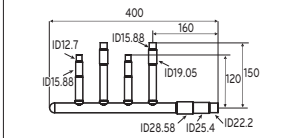	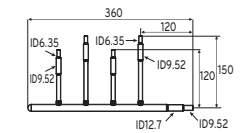
7 branch ARBL107		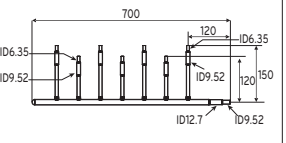
10 branch ARBL1010	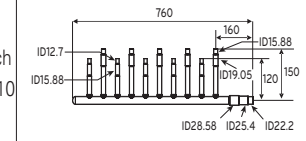	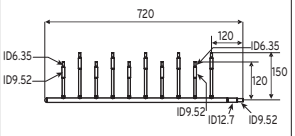
10 branch ARBL2010	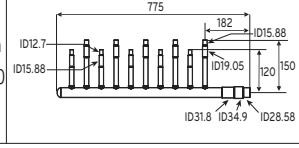	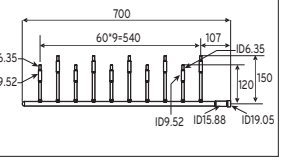

* For more information, refer accessory installation manual.

Leak Test and Vacuum drying

Leak test

Leak test should be made by pressurizing nitrogen gas to 3.8 MPa (38.7 kgf/cm^2). If the pressure does not drop for 24 hours, the system passes the test. If the pressure drops, check where the nitrogen leaks. For the test method, refer to the following figure. (Make a test with the service valves closed. Be also sure to pressurize liquid pipe, gas pipe and high/low pressure common pipe)

The test result can be judged good if the pressure has not be reduced after leaving for about one day after completion of nitrogen gas pressurization.

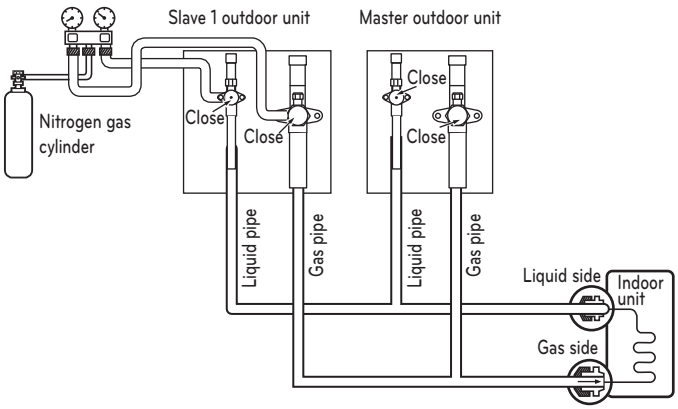

⚠ WARNING

Use a vacuum pump or Inert(nitrogen) gas when doing leakage test or air purge. Do not compress air or Oxygen and do not use Flammable gases. Otherwise, it may cause fire or explosion.

- There is the risk of death, injury, fire or explosion.

NOTE

If the ambient temperature differs between the time when pressure is applied and when the pressure drop is checked, apply the following correction factor

There is a pressure change of approximately 0.1 kg/cm^2 (0.01 MPa) for each 1 °C of temperature difference.

Correction= (Temp. at the time of pressurization – Temp. at the time of check) X 0.1

For example: Temperature at the time of pressurization (3.8 MPa) is 27 °C 24 hour later: 3.73 MPa, 20 °C In this case the pressure drop of 0.07 is because of temperature drop And hence there is no leakage in pipe occurred.

⚠ CAUTION

To prevent the nitrogen from entering the refrigeration system in the liquid state, the top of the cylinder must be at higher position than the bottom when you pressurize the system.

Usually the cylinder is used in a vertical standing position.

Vacuum

Vacuum drying should be made from the service port provided on the outdoor unit's service valve to the vacuum pump commonly used for liquid pipe, gas pipe and high/low pressure common pipe. (Make Vacuum from liquid pipe, gas pipe and high/low pressure common pipe with the service valve closed.)

* Never perform air purging using refrigerant.

- Vacuum drying: Use a vacuum pump that can evacuate to -100.7 kPa (5 Torr, -755 mmHg).
  - Evacuate the system from the liquid and gas pipes with a vacuum pump for over 2 hrs and bring the system to -100.7 kPa. After maintaining system under that condition for over 1 hr, confirm the vacuum gauge rises. The system may contain moisture or leak.
  - Following should be executed if there is a possibility of moisture remaining inside the pipe. (Rainwater may enter the pipe during work in the rainy season or over a long period of time)
    After evacuating the system for 2 hrs, give pressure to the system to 0.05 MPa(vacuum break) with nitrogen gas and then evacuate it again with the vacuum pump for 1hr to -100.7 kPa(vacuum drying). If the system cannot be evacuated to -100.7 kPa within 2 hrs, repeat the steps of vacuum break and its drying. Finally, check if the vacuum gauge does not rise or not, after maintaining the system in vacuum for 1 hr.

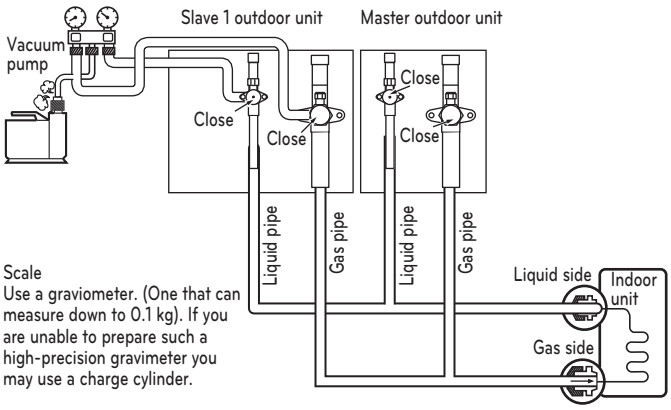

⚠ WARNING

Use a vacuum pump or Inert(nitrogen) gas when doing leakage test or air purge. Do not compress air or Oxygen and do not use Flammable gases. Otherwise, it may cause fire or explosion.

- There is the risk of death, injury, fire or explosion.

NOTE

Always add an appropriate amount of refrigerant. (For the refrigerant additional charge)
Too much or too little refrigerant will cause trouble.
To use the Vacuum Mode (If the Vacuum mode is set, all valves of Indoor units and Outdoor units will be opened.)

⚠ WARNING

When installing and moving the air conditioner to another site, recharge after perfect evacuation.

- If a different refrigerant or air is mixed with the original refrigerant, the refrigerant cycle may malfunction and the unit may be damaged.

Vacuum Mode

This function is used for creating vacuum in the system after compressor replacement, ODU parts replacement or IDU addition/replacement.

Vacuum mode setting method

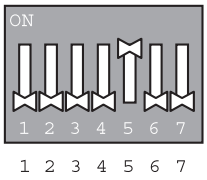

For 0 Series

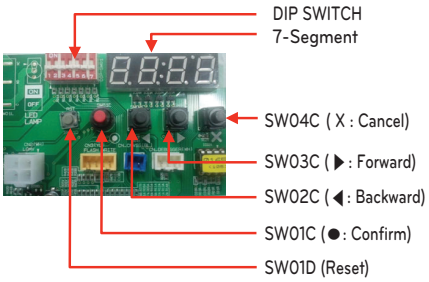

For 5 Series, ZRUN*LSS0**

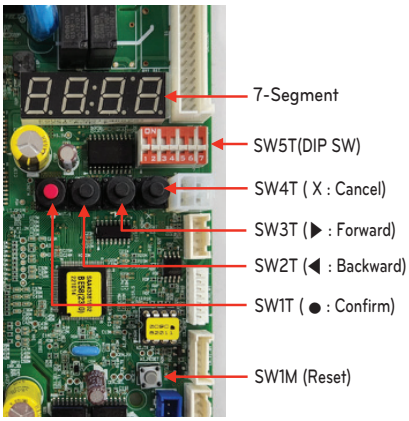

Master unit PCB DIP switch on : No.5

↓

Select the mode using '▶', '◀' Button : "SVC" Push the '●' button

↓

Select the Function using '▶', '◀' Button : "Se3" Push the '●' button

↓

Start the vacuum mode : "VACC"
ODU V/V open
ODU EEV open
IDU EEV open

Vacuum mode off method

DIP switch off and push the reset button on Master unit PCB

⚠ CAUTION

ODU operation stops during vacuum mode. Compressor can't operate.

Thermal insulation of refrigerant piping

Be sure to give insulation work to refrigerant piping by covering liquid pipe and gas pipe separately with enough thickness heat-resistant polyethylene, so that no gap is observed in the joint between indoor unit and insulating material, and insulating materials themselves. When insulation work is insufficient, there is a possibility of condensation drip, etc. Pay special attention to insulation work to ceiling plenum.

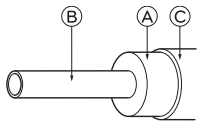

Heat insulation material	Adhesive + Heat - resistant polyethylene foam + Adhesive tape	
Outer covering	Indoor	Vinyl tape
	Floor exposed	Water-proof hemp cloth + Bronze asphalt
	Outdoor	Water-proof hemp cloth + Zinc plate + Oily paint

Ⓐ Heat insulation material
Ⓑ Pipe
Ⓒ Outer covering(Wind the connection part and cutting part of heat insulation material with a finishing tape.)

NOTE

When using polyethylene cover as covering material, asphalt roofing shall not be required.

Bad example

- Do not insulate gas or low pressure pipe and liquid or high pressure pipe together.

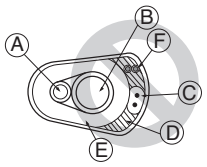

Ⓐ Liquid pipe
Ⓑ Gas pipe
ⓒ Power lines
ⓓ Finishing tape
ⓔ Insulating material
ⓕ Communication lines

- Be sure to fully insulate connecting portion.

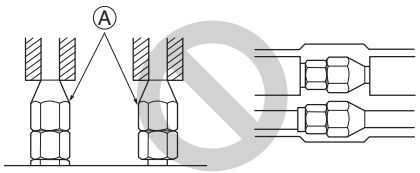

Ⓐ These parts are not insulated.

Good example

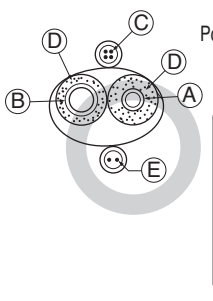

Ⓐ Liquid pipe
Ⓑ Gas pipe
ⓒ Power lines
ⓓ Insulating material
ⓔ Communication lines

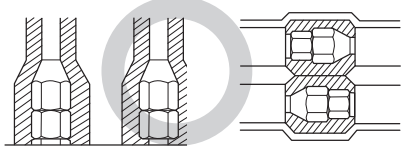

Penetrations

Inner wall (concealed)

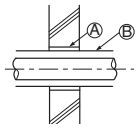

Outer wall

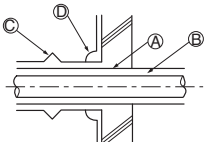

Outer wall (exposed)

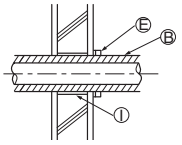

Floor (fireproofing)

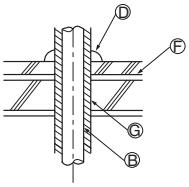

Roof pipe shaft

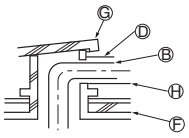

Penetrating portion on fire limit and boundary wall

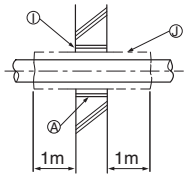

Ⓐ Sleeve
Ⓑ Heat insulating material
Ⓒ Lagging
Ⓓ Caulking material
Ⓔ Band
Ⓕ Waterproofing layer
Ⓖ Sleeve with edge
Ⓗ Lagging material
Ⓘ Mortar or other incombustible caulking
Ⓙ Incombustible heat insulation material

When filling a gap with mortar, cover the penetration part with steel plate so that the insulation material will not be caved in.
For this part, use incombustible materials for both insulation and covering. (Vinyl covering should not be used.)

ELECTRICAL WIRING

Caution

- Follow ordinance of your governmental organization for technical standard related to electrical equipment, wiring regulations and guidance of each electric power company.

⚠ WARNING

Be sure to have authorized electrical engineers do the electric work using special circuits in accordance with regulations and this installation manual.
If power supply circuit has a lack of capacity or electric work deficiency, it may cause an electric shock or fire.

- Install the Outdoor Unit communication cable away from the power source wiring so that it is not affected by electric noise from the power source. (Do not run it through the same conduit.)
- Be sure to provide designated grounding work to Outdoor Unit.

⚠ CAUTION

Be sure to correct the outdoor unit to earth. Do not connect ground wire to any gas pipe, liquid pipe, lightening rod or telephone earth line. If earth is incomplete, it may cause an electric shock.

- Give some allowance to wiring for electrical part box of Indoor and Outdoor Units, because the box is sometimes removed at the time of service work.
- Never connect the main power source to terminal block of communication cable. If connected, electrical parts will be burnt out.
- Use 2-core shield cable for communication cable.(○ mark in the figure below) If communication cable of different systems are wired with the same multiple core cable, the resultant poor transmitting and receiving will cause erroneous operations. (⃠ mark in the figure below)
- Only the communication cable specified should be connected to the terminal block for Outdoor Unit communication.

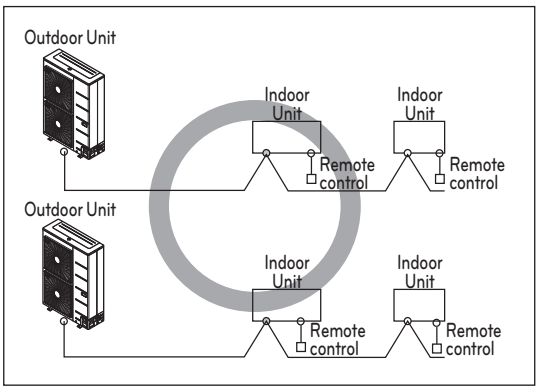

2-Core Shield Cable

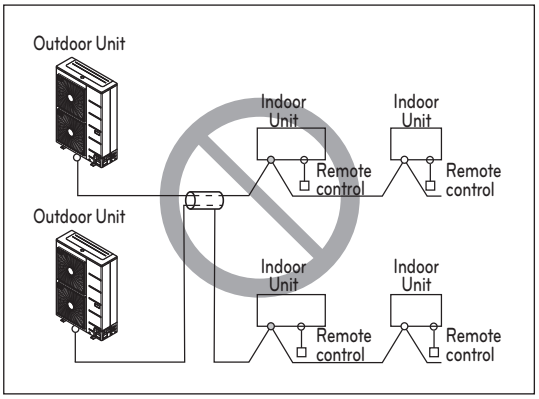

Multi-Core Cable

⚠ CAUTION

- Use the 2-core shield cables for communication cables. Never use them together with power cables.
- The conductive shielding layer of cable should be grounded to the metal part of both units.
- Never use multi-core cable
- As this unit is equipped with an inverter, to install a phase leading capacitor not only will deteriorate power factor improvement effect, but also may cause capacitor abnormal heating. Therefore, never install a phase leading capacitor.
- Make sure that the power unbalance ratio is not greater than 2 %. If it is greater the units lifespan will be reduced.

Precautions when laying power wiring

Use round pressure terminals for connections to the power terminal block.

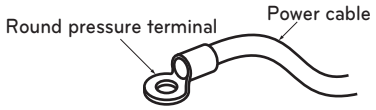

When none are available, follow the instructions below.

- Do not connect wiring of different thicknesses to the power terminal block. (Slack in the power wiring may cause abnormal heat.)
- When connecting cable which is the same thickness, do as shown in the figure below.

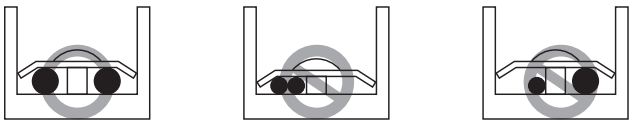

- For wiring, use the designated power cable and connect firmly, then secure to prevent outside pressure being exerted on the terminal block.
- Use an appropriate screwdriver for tightening the terminal screws. A screwdriver with a small head will strip the head and make proper tightening impossible.
- Over-tightening the terminal screws may break them.

⚠ CAUTION

When the 400 volt power supply is applied to "N" phase by mistake, check damaged parts in control box and replace them.

Control box and connecting position of wiring

- Remove all of the screws at side panel and remove the panel by pulling it forward.
- Connect communication cables between outdoor unit and indoor units through the terminal block.
- When the central control system is connected to the outdoor unit, a dedicated PCB must be connected between them.
- When connecting communication cable between outdoor unit and indoor units with shielded cable, connect the shield ground to the earth screw.

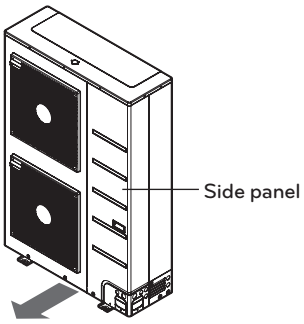

⚠ WARNING

The temperature sensor for outdoor air should not be exposed to direct sunlight.
- Provide an appropriate cover to intercept direct sunlight.

For 0 Series

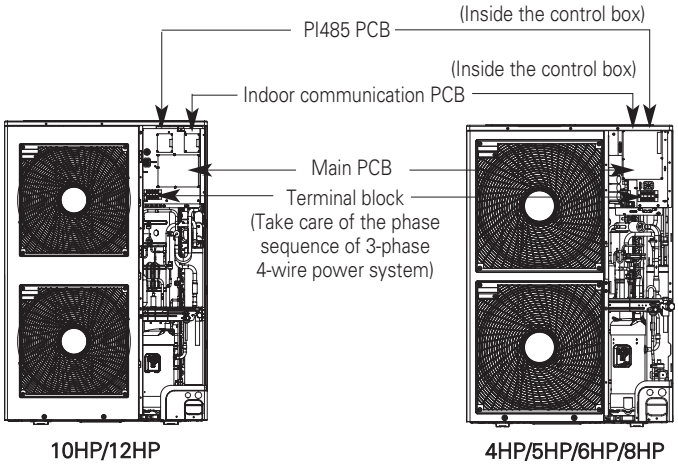

10HP/12HP　　4HP/5HP/6HP/8HP

For 5 Series, ZRUN*LSS0**

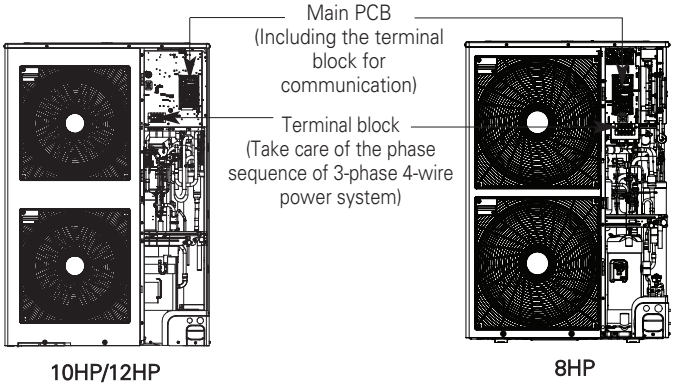

10HP/12HP　　8HP

※ Pictures may differ depending on the model.

Communication and Power Cables

Communication cable

- Types : shielding cable
- Cross section : 1.0~1.5 mm^2
- Maximum allowable temperature: 60 °C
- Maximum allowable cable length: under 300 m

Remote control cable

- Types : 3-core cable

Central control cable

Product type	Cable type	Diameter
ACP	2-core cable (Shielding cable)	1.0~1.5 mm^2
AC Smart	2-core cable (Shielding cable)	1.0~1.5 mm^2
AC Ez	4-core cable (Shielding cable)	1.0~1.5 mm^2

Separation of communication and power cables

- If communication and power cables are run alongside each other then there is a strong likelihood of operational faults developing due to interference in the signal wiring caused by electrostatic and electromagnetic coupling.
  The tables below indicates our recommendation as to appropriate spacing of communication and power cables where these are to be run side by side.

Current capacity of power cable		Spacing
100 V or more	10 A	300 mm
	50 A	500 mm
	100 A	1000 mm
	Exceed 100 A	1500 mm

NOTE

- The figures are based on assumed length of parallel cabling up to 100 m. For length in excess of 100 m the figures will have to be recalculated in direct proportion to the additional length of cable involved.
- If the power supply waveform continues to exhibit some distortion the recommended spacing in the table should be increased.
  - If the cable are laid inside conduits then the following point must also be taken into account when grouping various cable together for introduction into the conduits
  - Power cable(including power supply to air conditioner) and communication cables must not be laid inside the same
  - In the same way, when grouping the power wires and communication cables should not be bunched together.

⚠ CAUTION

If apparatus is not properly earthed then there is always a risk of electric shocks, the earthing of the apparatus must be carried out by a qualified person.

Wiring of main power supply and equipment capacity

- Use a separate power supply for the Outdoor Unit and Indoor Unit.
- Bear in mind ambient conditions (ambient temperature,direct sunlight, rain water,etc.) when proceeding with the wiring and connections.
- The cable size is the minimum value for metal conduit wiring. The power cord size should be 1 rank thicker taking into account the line voltage drops. Make sure the power-supply voltage does not drop more than 10 %.
- Specific wiring requirements should adhere to the wiring regulations of the region.
- Power supply cords of parts of appliances for outdoor use should not be lighter than polychloroprene sheathed flexible cord.
- Don't install an individual switch or electrical outlet to disconnect each of indoor unit separately from the power supply.

⚠ WARNING

- Follow ordinance of your governmental organization for technical standard related to electrical equipment, wiring regulations and guidance of each electric power company.
- Make sure to use specified cables for connections so that no external force is imparted to terminal connections. If connections are not fixed firmly, it may cause heating or fire.
- Make sure to use the appropriate type of overcurrent protection switch. Note that generated overcurrent may include some amount of direct current.

⚠ CAUTION

- Some installation site may require attachment of an earth leakage breaker. If no earth leakage breaker is installed, it may cause an electric shock.
- Do not use anything other than breaker and fuse with correct capacity. Using fuse and wire or copper wire with too large capacity may cause a malfunction of unit or fire.

Field Wiring

Single outdoor unit

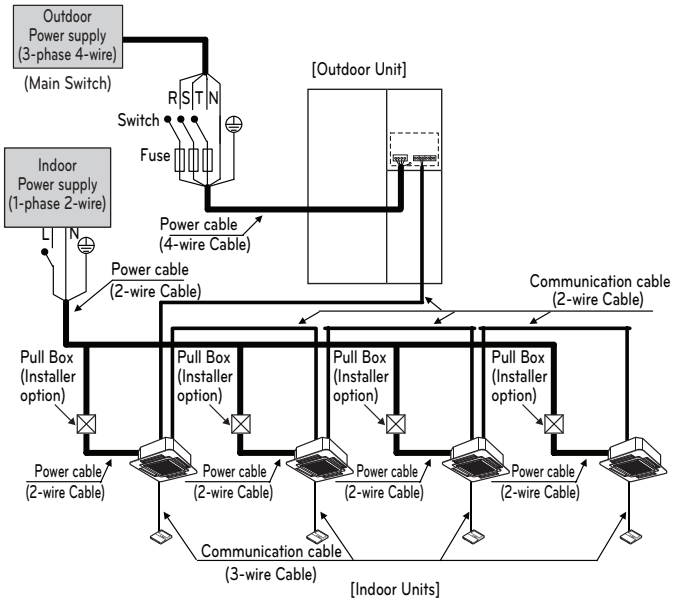

Frequency	Voltage range(V)	
	Outdoor	Indoor
60 Hz	380 V	220 V
50 Hz	380~415 V	220~240 V

Heat Pump

Between Indoor and Master Outdoor unit

For 0 Series

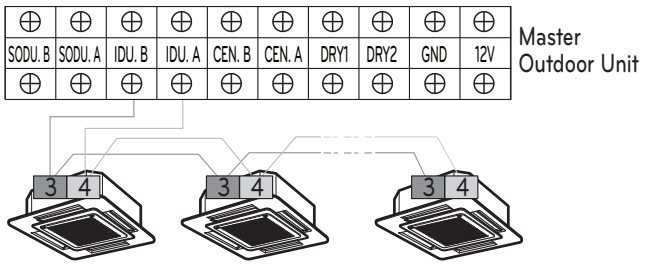

For 5 Series, ZRUN*LSS0**

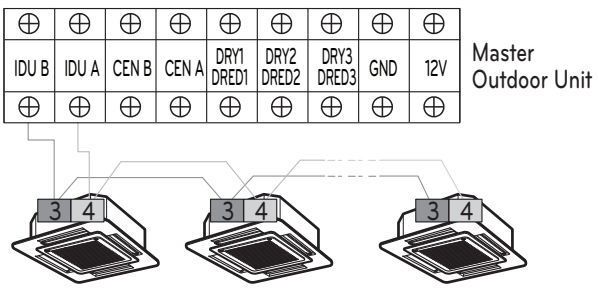

The GND terminal at the main PCB is a '-' terminal for day contact, it is not the point to make ground connection.

⚠ WARNING

- Indoor Unit ground wires are required for preventing electrical shock accident during current leakage, Communication disorder by noise effect and motor current leakage (without connection to pipe).
- Don't install an individual switch or electrical outlet to disconnect each of indoor unit separately from the power supply.
- Install the main switch that can interrupt all the power sources in an integrated manner because this system consists of the equipment utilizing the multiple power sources.
- If there exists the possibility of reversed phase, lose phase, momentary blackout or the power goes on and off while the product is operating, attach a reversed phase protection circuit locally. Running the product in reversed phase may break the compressor and other parts.

Example: Connection of transmission wire

BUS type

- Connection of communication cable must be installed like below figure between indoor unit to outdoor unit.

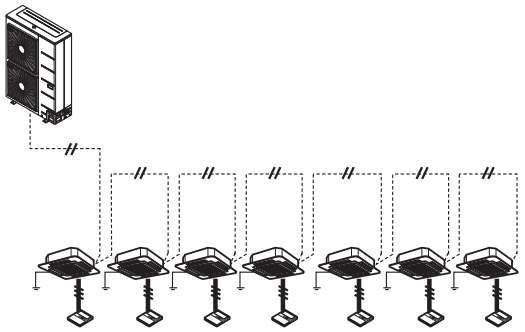

STAR type

- Abnormal operation can be caused by communication defect, when connection of communication cable is installed like below figure(STAR type).

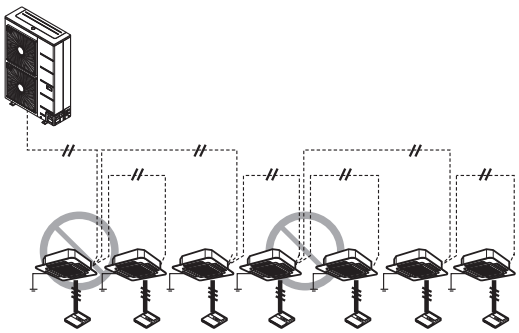

Example) Connection of power and communication cable

For 0 Series

10HP/12HP

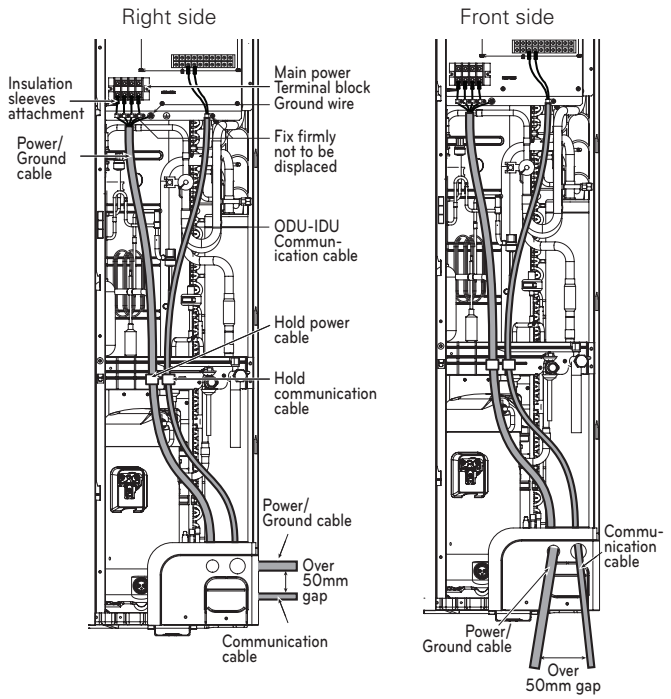

4HP

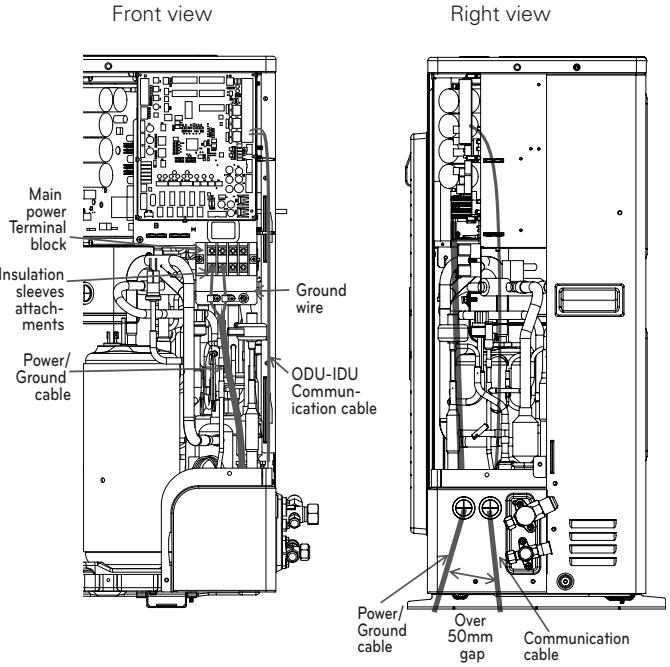

※ Pictures may differ depending on the model.

4HP / 5HP / 6HP / 8HP

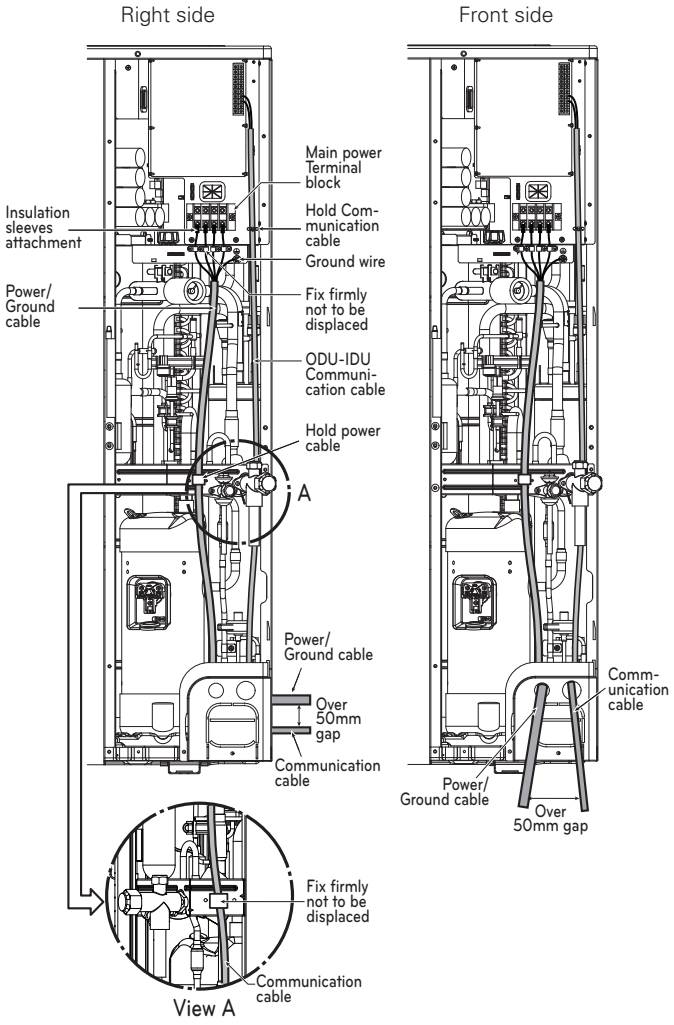

For 5 Series, ZRUN***LSS0

10HP / 12HP

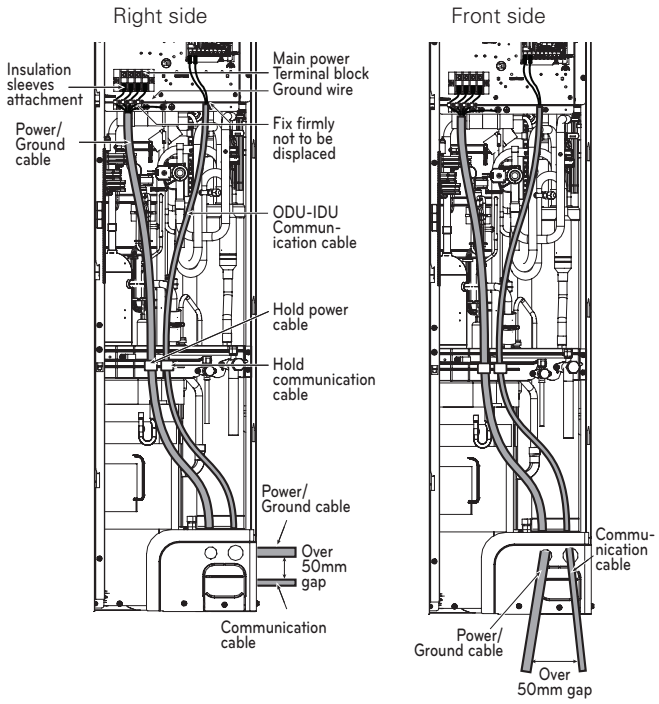

8HP

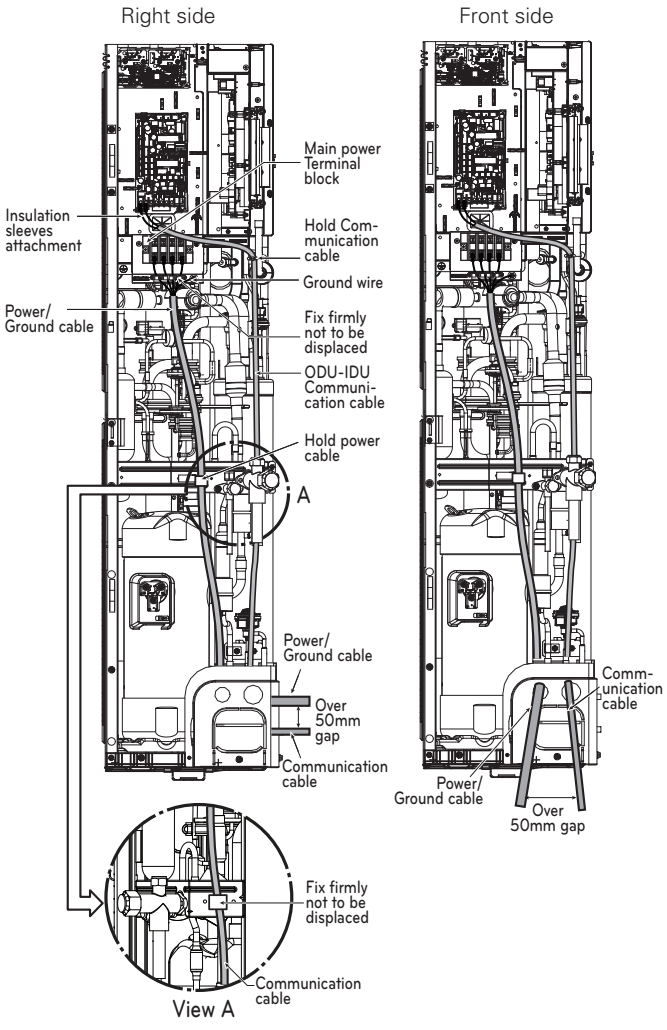

※ Pictures may differ depending on the model.

Installation of IO Module(optional)

① Assemble IO Module and bracket.
② Fix the bracket on designated location with two clamp cords (105 mm).
③ Connect the connection wires according to the instructions. (Please refer to Setting and Using Method)

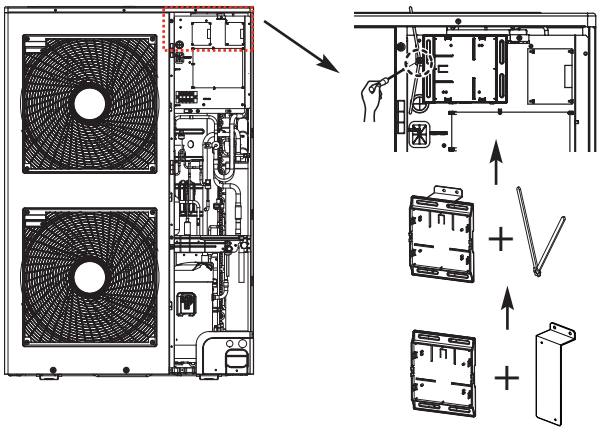

※ Pictures may differ depending on the model.

- About more information of IO Module, please refer to IO Module manual.

⚠ CAUTION

Be sure to turn off outdoor unit power before installation.

Checking the setting of outdoor units

Checking according to DIP switch setting

- You can check the setting values of the Master outdoor unit from the 7 segment LED.
  The DIP switch setting should be changed when the power is OFF.

Checking the initial display

The number is sequentially appeared at the 7 segment in 5 seconds after applying the power. This number represents the setting condition. (For example, represents R410A 10HP)

• Initial display order

Order	No	Note
①	4~12	Model capacity
②	1	Cooling only
	2	Heat pump
③	38	380 V
	46	460 V
	22	220 V
④	1	Standard
	5	Cold temperature area
	6	Tropical

• Example) ARUN100LSS0

①	②	③	④
10	2	38	1

ENGLISH

Automatic Addressing

The address of indoor units would be set by Automatic Addressing

- Wait for 3 minutes after supplying power. (Master and Slave outdoor units, indoor units)
- Press RED button of the outdoor units for 5 seconds. (0 Series - SW01C / 5 Series - SW1T)
- A "88" is indicated on 7-segment LED of the outdoor unit PCB.
- For completing addressing, 2~7 minutes are required depending on numbers of connected indoor units
- Numbers of connected indoor units whose addressing is completed are indicated for 30 seconds on 7-segment LED of the outdoor unit PCB
- After completing addressing, address of each indoor unit is indicated on the wired remote control display window. (CH01, CH02, CH03, ……, CH06 : Indicated as numbers of connected indoor units)

Heat Pump (MAIN PCB)

For 0 Series

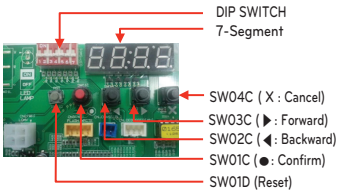

For 5 Series, ZRUN*LSS0**

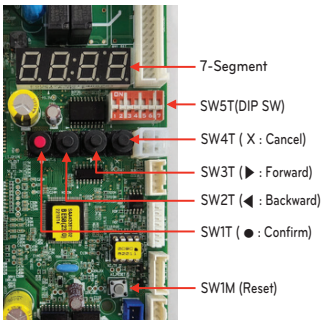

⚠ CAUTION

- In replacement of the indoor unit PCB, always perform Automatic addressing setting again (At that time, please check about using Independent power module to any indoor unit.)
- If power supply is not applied to the indoor unit, operation error occur.
- Automatic Addressing is only possible on the master Unit.
- Automatic Addressing has to be performed after 3 minutes to improve communication.

The Procedure of Automatic Addressing

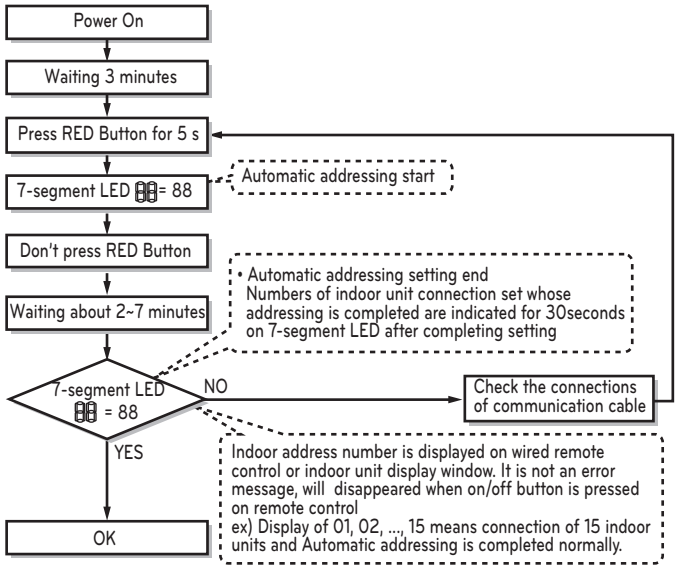

Setting the function

Select the mode/function/option/value using '▶', '◀' Button and confirm that using the '●' button after DIP switch No.5 is turned on.

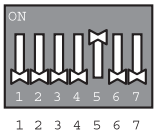

For 0 Series

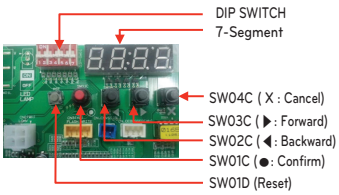

For 5 Series, ZRUN*LSS0**

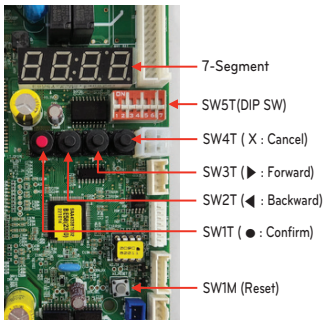

Mode		Function		Option			Value		Action		Remarks
Content	Display 1	Content	Display 2	Content		Display 3	Content	Display 4	Implement	Display 5	
Installation	Func	Cool & Heat Selector	Fn 1	oFF	oP1~oP2	Selected the option	-	-	Change the set value	Blank	Save in EEPROM
		High Static Pressure Compensation mode	Fn2	oFF	oP1~oP3	Selected the option	-	-	Change the set value	Blank	Save in EEPROM
		Night Low Noise mode	Fn3	oFF	oP1~oP15	Selected the option	-	-	Change the set value	Blank	Save in EEPROM
		ODU address setting	Fn5	-		-	0~254	Set the value	Change the set value	Blank	Save in EEPROM
		Snow removal & rapid defrost	Fn6	oFF	oP1~oP3	Selected the option	-	-	Change the set value	Blank	Save in EEPROM
		Airflow Adjusting for IDU (Heating capacity up)	Fn7	oFF	on	Selected the option	-	-	Change the set value	Blank	Save in EEPROM
		Target Pressure Adjusting	Fn8	oFF	oP1~oP6	Selected the option	-	-	Change the set value	Blank	Save in EEPROM
		High Efficiency Mode (Cooling Operation)	Fn9	oFF	on	Selected the option	-	-	Change the set value	Blank	Save in EEPROM
		Compressor Max. Frequency Limit	Fn 12	0	5~180	Selected the option	-	-	Change the set value	Blank	Save in EEPROM
		ODU Fan Max. RPM Limit mode	Fn 13	0	400~1200	Selected the option	-	-	Change the set value	Blank	Save in EEPROM
		Smart Load Control Mode setting	Fn 14	oFF	oP1~oP3	Selected the option	-	-	Change the set value	Blank	Save in EEPROM
		Priority Heating Operation	Fn25	oFF	on, oFF	Selected the option	-	-	Change the set value	Blank	Save in EEPROM

* Functions save in EEPROM will be kept continuously, though the system power was reset.

* DIP switch 3 can be OFF except when installing the only 4 series indoor units (named ARNU***4).

Group Number setting

Group Number setting for Indoor Units

- Confirm the power of whole system(Indoor Unit, Outdoor Unit) is OFF, otherwise turn off.
- The communication cables connected to CEN.A and CEN.B terminal should be connected to central control of Outdoor Unit with care for their polarity (A-A, B-B).
- Turn the whole system on.
- Set the group and Indoor Unit number with a wired remote control.
- To control several sets of Indoor Units into a group, set the group ID from 0 to F for this purpose.

Outdoor Units (Main PCB)

For 0 Series

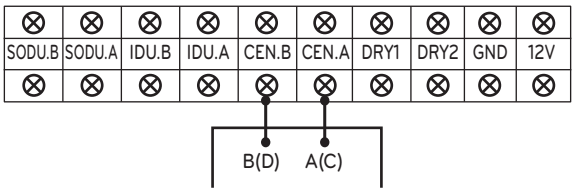

For 5 Series, ZRUN***LSS0

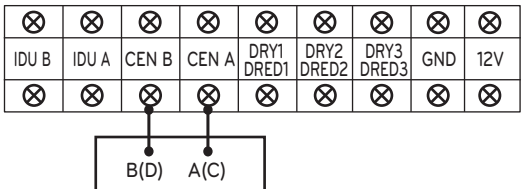

Example) Group number setting

1 F
Group Indoor unit

1st number indicate the group number
2nd number point out indoor unit number

Group recognizing the central controller	
No.0 group (00~0F)	No.8 group (80~8F)
No.1 group (10~1F)	No.9 group (90~9F)
No.2 group (20~2F)	No. A group (A0~AF)
No.3 group (30~3F)	No. B group (B0~BF)
No.4 group (40~4F)	No. C group (C0~CF)
No.5 group (50~5F)	No. D group (D0~DF)
No.6 group (60~6F)	No. E group (E0~EF)
No.7 group (70~7F)	No. F group (F0~FF)

Cool & Heat selector

Mode setting method

Master unit PCB DIP switch on : No.5
↓
Select the mode using '▶', '◀' Button : "Func" Push the '●' button
↓
Select the Function using '▶', '◀' Button : "Fn1" Push the '●' button
↓
Select the Option using '▶', '◀' Button : "oFF","oP1","oP2" Push the '●' button
↓
Cool & Heat Selection mode is set

Function setting

Switch control		Function		
Switch(Phase)	Switch(Bottom)	oFF	oP1(mode)	oP2(mode)
Right	Left	Not operate	Cooling	Cooling
Right	Right	Not operate	Heating	Heating
Left	-	Not operate	Fan mode	Off

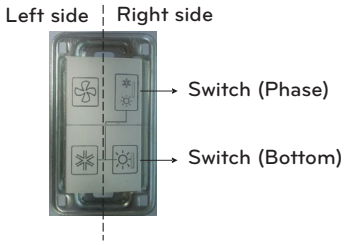

⚠ CAUTION

- Ask an authorized technician to setting a function.
- If do not use a function, set an off-mode.
- If use a function, first install a Cool & Heat selector.

Static pressure compensation mode

This function secures the air flow rate of ODU, in case static pressure has been applied like using duct at fan discharge of ODU.

Static pressure compensation mode setting method

Master unit PCB DIP switch on : No.5
↓
Select the mode using '▶', '◀' Button : "Func" Push the '●' button
↓
Select the Function using '▶', '◀' Button : "Fn2" Push the '●' button
↓
Select the Option using '▶', '◀' Button : "oP1~oP3" Push the '●' button
↓
Start the Static pressure compensation mode : Save the selected option value in EEPROM

FAN Maximum RPM of each step

Model	Max.RPM		
	Standard	oP1	oP2
ARUN04/05/060GR0 ARUN04/05/060LSR0 ARUN04/05/060GSS0 ARUN04/05/060LSS0	650	800	850
ARUN080LSR0 ARUN080LSS0	800	850	850
ARUN080LSS5	720	850	850
ZRUN080LSS0	720	850	850
ARUN10/120LSR0 ARUN10/120S9S	650	700	750
ARUN10/120LSS0	-	-	-
ARUN10/120LSS5	750	950	1 000
ZRUN10/120LSS0	750	950	1 000

Night Low Noise Function

In cooling mode, this function makes the ODU fan operate at low RPM to reduce the fan noise of ODU at night which has low cooling load.

Night low noise function setting method

Master unit PCB DIP switch on : No.5

↓

Select the mode using '▶', '◀' Button : "Func" Push the '●' button

↓

Select the Function using '▶', '◀' Button : "Fn3" Push the '●' button

↓

Select the Option using '▶', '◀' Button : "oP1~oP15" Push the '●' button

↓

Start the Night low noise function : Save the selected option value in EEPROM

Time Settings

Step	Judgement Time(Hr)	Operation Time(Hr)
oP1	8	9
oP2	6.5	10.5
oP3	5	12
oP4	8	9
oP5	6.5	10.5
oP6	5	12
oP7	8	9
oP8	6.5	10.5
oP9	5	12
oP10	Continuous operation	
oP11	Continuous operation	
oP12	Continuous operation	
oP13	6.5	10.5
oP14	6.5	10.5
oP15	6.5	10.5

⚠ CAUTION

- Request installer to set the function during installation.
- If ODU RPM changes, cooling capacity may go down.

Setting the ODU address

Mode setting method

Master unit PCB DIP switch on : No.5

↓

Select the mode using '▶', '◀' Button : "Func" Push the '●' button

↓

Select the Function using '▶', '◀' Button : "Fn5" Push the '●' button

↓

Select the Option using '▶', '◀' Button : "0" ~ "255" Push the '●' button

↓

ODU address is set

⚠ CAUTION

- Ask an authorized technician to setting a function.
- If use a function, first install a Central controller.

Snow removal & rapid defrost

Mode setting method

Master unit PCB DIP switch on : No.5

↓

Select the mode using '▶', '◀' Button : "Func" Push the '●' button

↓

Select the Function using '▶', '◀' Button : "Fn6" Push the '●' button

↓

Select the Option using '▶', '◀' Button : "oFF","oP1" ~ "oP3" Push the '●' button

↓

Mode is set

Mode setting

setting	Mode
oFF	Not setting
oP1	Snow removal mode
oP2	Rapid defrost mode
oP3	Snow removal mode. + Rapid defrost mode.

⚠ CAUTION

- Ask an authorized technician to setting a function.
- If do not use a function, set an off-mode.

Target pressure adjusting

Mode setting method

Master unit PCB DIP switch on : No.5

↓

Select the mode using '▶', '◀' Button : "Func" Push the '●' button

↓

Select the Function using '▶', '◀' Button : "Fn8" Push the '●' button

↓

Select the Option using '▶', '◀' Button : "hEAt" , "cooL" Push the '●' button

↓

Select the Option using '▶', '◀' Button : "oFF","oP1" ~ "oP4" Push the '●' button

↓

Target pressure is set

Setting

Mode	Purpose		Condensing temperature variation	Evaporating temperature variation
	Heat	Cool		
oP1	Increase capacity	Increase capacity	+2 °C	-3 °C
oP2	Decrease power consumption	Increase capacity	-2 °C	-1.5 °C
oP3	Decrease power consumption	Decrease power consumption	-4 °C	+2.5 °C
oP4	Decrease power consumption	Decrease power consumption	-6 °C	-4.5 °C

⚠ CAUTION

- Ask an authorized technician to setting a function.
- If do not use a function, set an off-mode.
- Change a power consumption or capacity.

Priority Heating Operation

This is the function that gives priority to the hot water supply operation (heating) for the model that cannot simultaneously operate heating and cooling. This function enables the appliance to supply hot water and operate indoor cooling by alternatevely heating using hydrokit and cooling operation.

Mode setting method

Master unit PCB DIP switch on : No.5

↓

Select the mode using '▶', '◀' Button : "Func" Push the '●' button

↓

Select the Function using '▶', '◀' Button : "Fn25" Push the '●' button

↓

Select the Option using '▶', '◀' Button : "on" , "oFF" Push the '●' button

↓

Select the Option using '▶', '◀' Button : "hEAt" Push the '●' button

↓

Heating priority operation is set

Setting the function

Select the mode/function/option/value using '▶', '◀' Button and confirm that using the '●' button after DIP switch No.5 is turned on.

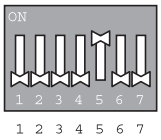

For 0 Series

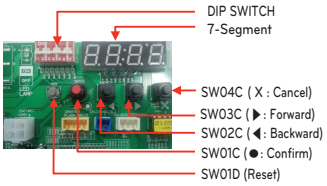

For 5 Series, ZRUN***LSS0

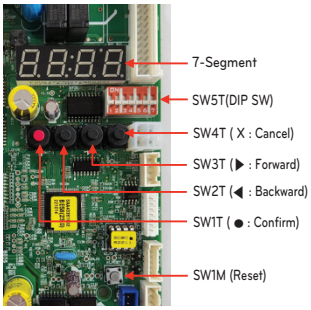

Self-Diagnosis Function

Error Indicator

- This function indicates types of failure in self-diagnosis and occurrence of failure for air condition.
- Error mark is displayed on display window of indoor units and wired remote controller, and 7-segment LED of outdoor unit control board as shown in the table.
- If more than two troubles occur simultaneously, lower number of error code is first displayed.
- After error occurrence, if error is released, error LED is also released simultaneously.

Error Display

1st,2nd,3rd LED of 7-segment indicates error number, 4th LED indicates unit number.

Ex) 

* Refer to the Indoor manual for some Indoor Error code.

Display				Title	Cause of Error
Indoor unit related error	0	1	-	Air temperature sensor of indoor unit	Air temperature sensor of indoor unit is open or short
	0	2	-	Inlet pipe temperature sensor of indoor unit	Inlet pipe temperature sensor of indoor unit is open or short
	0	3	-	Communication error : wired remote controller ↔ indoor unit	Failing to receive wired remote controller signal in indoor unit PCB
	0	4	-	Drain pump	Malfunction of drain pump
	0	5	-	Communication error : outdoor unit ↔ indoor unit	Failing to receive outdoor unit signal in indoor unit PCB
	0	6	-	Outlet pipe temperature sensor of indoor unit	Outlet pipe temperature sensor of indoor unit is open or short
	0	9	-	Indoor EEPROM Error	In case when the serial number marked on EEPROM of Indoor unit is 0 or FFFFFF
	1	0	-	Poor fan motor operation	Disconnecting the fan motor connector/Failure of indoor fan motor lock
Outdoor unit related error	2	1	1	Outdoor Unit Inverter Compressor IPM Fault	Outdoor Unit Inverter Compressor Drive IPM Fault
	2	2	1	Inverter Board Input Over Current(RMS) of Outdoor Unit	Outdoor Unit Inverter Board Input Current excess (RMS)
	2	3	1	Outdoor Unit Inverter Compressor DC link Low Voltage	DC charging is not performed at Outdoor Unit after starting relay turn on.
	2	4	1	Outdoor Unit High Pressure Switch	System is turned off by Outdoor Unit high pressure switch.
	2	5	1	Outdoor Unit Input Voltage High/ Low Voltage	Outdoor Unit input voltage is over 487 V or below 270 V
	2	6	1	Outdoor Unit Inverter Compressor Start Failure	The First Start Failure by Outdoor Unit Inverter Compressor Abnormality
	2	9	1	Outdoor Unit Inverter Compressor Over Current	Outdoor Unit Inverter Compressor Fault OR Drive Fault
	3	2	1	Outdoor Unit Inverter Compressor1 High Discharge Temperature	Outdoor Unit Inverter Compressor1 High Discharge Temperature
	3	4	1	High Pressure of Outdoor Unit	High Pressure of Outdoor Unit
	3	5	1	Low Pressure of Outdoor Unit	Low Pressure of Outdoor Unit
	3	6	1	Outdoor Unit Low Compression Ratio Limited	Outdoor Unit Low Compression Ratio Limited

	Display				Title	Cause of Error
Outdoor unit related error	4	0	1		Outdoor Unit Inverter Compressor CT Sensor Fault	Outdoor Unit Inverter Compressor CT Sensor open or short
	4	1	1		Outdoor Unit Inverter Compressor1 Discharge Temperature Sensor Fault	Outdoor Unit Inverter Compressor Discharge Temperature Sensor open or short
	4	2	1		Outdoor Unit Low Pressure Sensor Fault	Outdoor Unit Low Pressure Sensor open or short
	4	3	1		Outdoor Unit High Pressure Sensor Fault	Outdoor Unit High Pressure Sensor open or short
	4	4	1		Outdoor Unit Air Temperature Sensor Fault	Outdoor Unit Air Temperature Sensor open or short
	4	5	1		Outdoor Unit Heat Exchanger Temperature Sensor (Front side) Fault	Outdoor Unit Heat Exchanger Temperature Sensor(Front side) open or short
	4	6	1		Outdoor Unit Suction Temperature Sensor Fault	Outdoor Unit Suction Temperature Sensor open or short
	5	0	1		Omitting connection of R, S, T power of Outdoor Unit	Omitting connection of outdoor unit
	5	1	1		Excessive capacity of indoor units	Excessive connection of indoor units compared to capacity of Outdoor Unit
	5	2	1		Communication error : inverter PCB → Main PCB	Failing to receive inverter signal at main PCB of Outdoor Unit
	5	3	1		Communication error : indoor unit → Main PCB of Outdoor Unit	Failing to receive indoor unit signal at main PCB of Outdoor Unit.
	5	7	1		Communication error : Main PCB → inverter PCB	Failing to receive signal main PCB at inverter PCB of Outdoor Unit
	6	0	1		Inverter PCB EEPROM Error of Master Outdoor Unit	Access Error of Inverter PCB of Outdoor Unit
	6	2	1		Outdoor Unit Inverter Heatsink High Temperature	System is turned off by Outdoor Unit Inverter Heatsink High Temperature
	6	5	1		Outdoor Unit Inverter Heatsink Temperature Sensor Fault	Outdoor Unit Inverter Heatsink Temperature Sensor open or short
	6	7	1		Outdoor Unit Fan Lock	Restriction of Outdoor Unit
	7	1	1		Converter CT Sensor Error of Outdoor Unit	Converter CT Sensor open or short of Outdoor Unit
	8	6	1		Outdoor Unit Main PCB EEPROM Error	Communication Fail Between Outdoor Unit Main MICOM and EEPROM or omitting EEPROM
	1	1	3	1	Outdoor Unit Liquid pipe Temperature Sensor Error	Liquid pipe temperature sensor of Outdoor Unit is open or short
	1	1	5	1	Outdoor Unit Subcooling Outlet Temperature Sensor Error	Outdoor Unit Subcooling Outlet Temperature Sensor Error
	1	5	1	1	Failure of operation mode conversion at Outdoor Unit	Failure of operation mode conversion at Outdoor Unit
	1	0	4	*	Communication Error Between Master Outdoor Unit and Other Outdoor Unit	Failing to receive Slave Unit signal at main PCB of Master Outdoor Unit
	1	0	5	*	Master Outdoor Unit Fan PCB Communication Error	Failing to receive fan signal at main PCB of Master unit.
	1	0	6	*	Master Outdoor Unit FAN IPM Fault Error	Instant Over Current at Master Outdoor Unit Fan IPM
	1	0	7	*	Master Outdoor Unit Fan DC Link Low Voltage Error	Master Outdoor Unit Fan DC Link Input Voltage is under 380V
	1	1	3	*	Master Outdoor Unit Liquid pipe Temperature Sensor Error	Liquid pipe temperature sensor of Master Outdoor Unit is open or short
	1	1	4	*	Master Outdoor Unit Subcooling Inlet Temperature Sensor Error	Master Outdoor Unit Subcooling Inlet Temperature Sensor Error
	1	1	5	*	Master Outdoor Unit Subcooling Outlet Temperature Sensor Error	Master Outdoor Unit Subcooling Outlet Temperature Sensor Error
	1	1	6	*	Master Outdoor Unit Oil Level Sensor Error	Oil Level Sensor of Master Outdoor Unit is open or short
	1	4	5	*	Master outdoor unit Main Board - External Board communication Error	Master outdoor unit Main Board - External Board communication Error
	1	5	1	*	Failure of operation mode conversion at Master Outdoor Unit	Failure of operation mode conversion at Master Outdoor Unit
	1	5	3	*	Master Outdoor Unit Heat Exchanger Temperature Sensor (upper part) Fault	Master Outdoor Unit Heat Exchanger Temperature Sensor (upper part) Fault
	1	5	4	*	Master Outdoor Unit Heat Exchanger Temperature Sensor (lower part) Fault	Master Outdoor Unit Heat Exchanger Temperature Sensor(lower part) open or short
	1	8	2	*	Master outdoor unit External Board Main-Sub Micom communication Error	Master Outdoor Unit Main Board Main-Sub Micom communication failed
	1	9	3	*	Master Outdoor Unit Fan Heatsink High Temperature	System is turned off by Master Outdoor Unit Fan Heatsink High Temperature
	1	9	4	*	Master Outdoor Unit Fan Heatsink Temperature Sensor Fault	Master Outdoor Unit Fan Heatsink Temperature Sensor open or short

SPECIAL REQUIREMENTS

Flow chart

For Installation

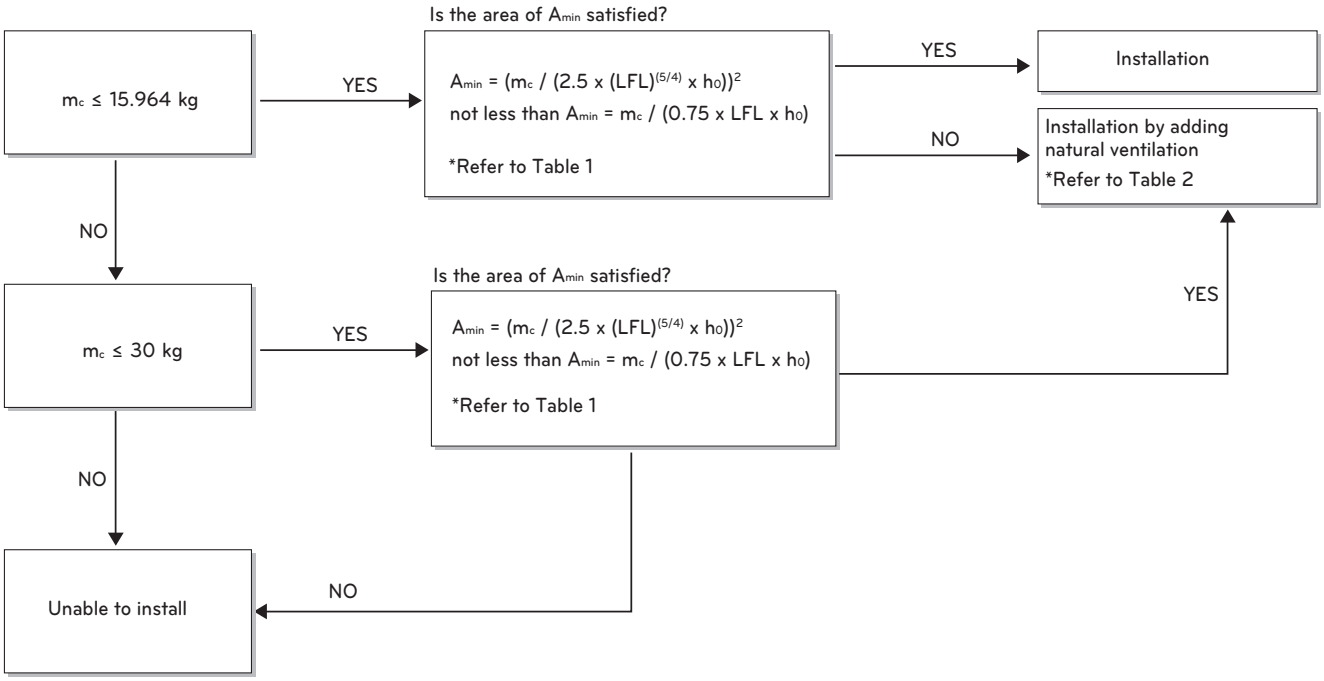

A_{min} = Minimum installation required area

m_c = Total amount of refrigerant in the system (kg)

LFL(Lower Flammability Limit)(kg/m³) = 0.307 kg/m³

h_0: The Vertical Distance from the floor to the point of Release (m)

Table 1 (Minimum installation required area)

Total amount of refrigerant in the system (kg)	Minimum installation required area (m^2)	
	Ceiling mounted (h_0 : 2.2 m)	Wall mounted (h_0 : 1.8 m)
8.50	45.74	68.32
8.60	46.82	69.94
8.80	49.02	73.23
9.00	51.28	76.60
9.20	53.58	80.04
9.40	55.94	83.56
9.60	58.34	87.15
9.80	60.80	90.82
10.00	63.30	94.56
10.20	65.86	98.39
10.40	68.47	102.28
10.60	71.13	106.25
10.80	73.84	110.30
11.00	76.60	114.42
11.20	79.41	118.62
11.40	82.27	122.90
11.60	85.18	127.25
11.80	88.14	131.67
12.00	91.16	136.17
12.20	94.22	140.75
12.40	97.34	145.40
12.60	100.50	150.13
12.80	103.72	154.93
13.00	106.98	159.81
13.20	110.30	164.77
13.40	113.67	169.80
13.60	117.09	174.91
13.80	120.56	180.09
14.00	124.08	185.35
14.20	127.65	190.68
14.40	131.27	196.09
14.60	134.94	201.57
14.80	138.66	207.13
15.00	142.43	212.77
15.20	146.26	218.48
15.40	150.13	224.27
15.60	154.06	230.13
15.80	158.03	236.07
15.964*	161.33	241.00
16.00	162.06	242.09
16.20	166.13	248.18
16.40	170.26	254.34
16.60	174.44	260.58
16.80	178.67	266.90
17.00	182.95	273.29
17.20	187.28	279.76
17.40	191.66	286.30
17.60	196.09	292.92
17.80	200.57	299.62
18.00	205.10	306.39
18.20	209.69	313.24
18.40	214.32	320.16
18.60	219.01	327.16
18.80	223.74	334.23
19.00	228.53	341.38
19.20	233.36	348.60
19.40	238.25	355.90
19.60	243.19	363.28
19.80	248.18	370.73
20.00	253.21	378.26
20.20	258.30	385.86
20.40	263.44	393.54
20.60	268.64	401.29
21.00	279.17	417.03
21.20	284.51	425.01
21.40	289.91	433.07
21.60	295.35	441.20
21.80	300.84	449.41
22.00	306.39	457.69
22.20	311.99	466.05
22.40	317.63	474.49
22.60	323.33	483.00
22.80	329.08	491.59
23.00	334.88	500.25
23.20	340.73	508.99
23.40	346.63	517.80
23.60	352.58	526.69
23.80	358.58	535.65
24.00	364.63	544.69
24.20	370.73	553.81
24.40	376.88	563.00
24.60	383.09	572.27
24.80	389.34	581.61
25.00	395.65	591.03
25.20	402.00	600.52
25.40	408.41	610.09
25.60	414.87	619.74
25.80	421.37	629.46
26.00	427.93	639.26
26.20	434.54	649.13
26.40	441.20	659.08
26.60	447.91	669.10
26.80	454.67	679.20
27.00	461.48	689.38
27.20	468.35	699.63
27.40	475.26	709.95
27.60	482.22	720.36
27.80	489.24	730.83
28.00	496.30	741.39
28.20	503.42	752.02
28.40	510.58	762.72
28.60	517.80	773.50
28.80	525.07	784.36
29.00	532.38	795.29
29.20	539.75	806.30
29.40	547.17	817.38
29.60	554.64	828.54
29.80	562.16	839.77
30.00	569.73	851.08

* If m_c>15.964, must add natural ventilation

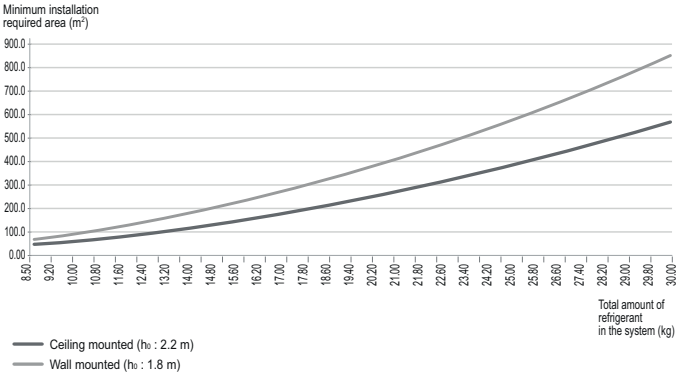

Table 2 (Minimum installation required area)

For the lower opening:
- It is not an opening to the outside
- The opening cannot be closed
- The opening must be ≥ Anv_{min}
- The area of any openings above 300 mm from the floor does not count when determining Anv_{min}
- At least 50% of Anv_{min} is less than 200 mm above the floor
- The bottom of the lower opening is ≤100 mm from the floor
- The height of the opening is ≥ 20 mm

For the upper opening:
- It is not an opening to the outside
- The opening cannot be closed
- The opening must be ≥ 50% of Anv_{min}
- The bottom of the upper opening must be ≥ 1 500 mm above the loor
- The height of the opening is ≥ 20 mm

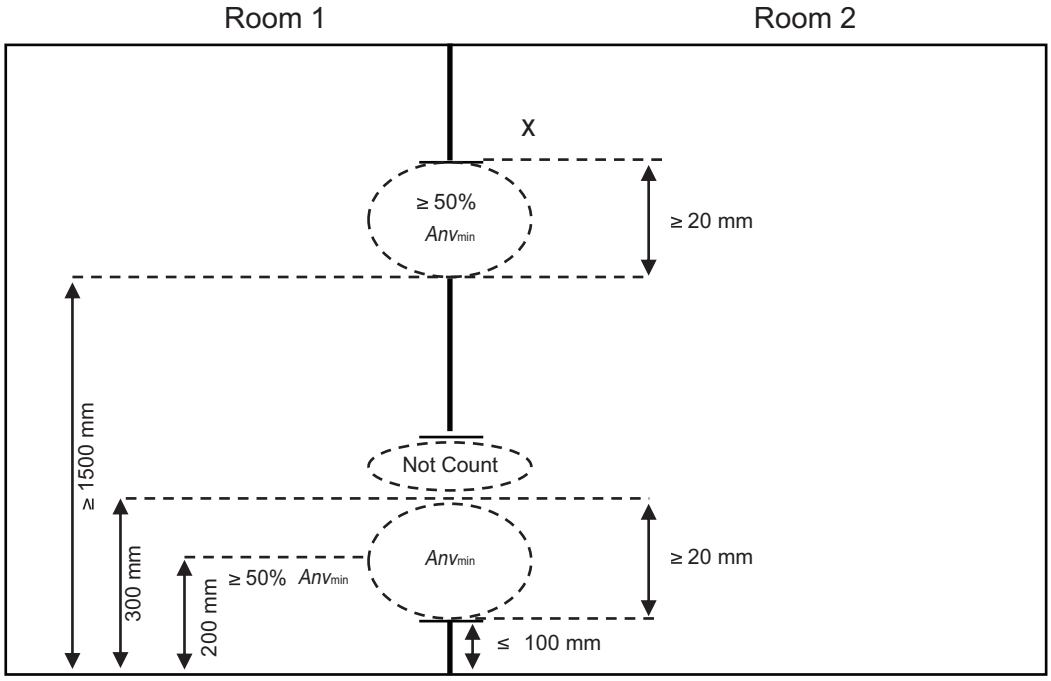

Minimum opening area (*Anv*)

$$Anv_{min} = \frac{m_c - m_{max}}{LFL \times 104} \times \sqrt{\frac{A}{g \times m_{max}} \quad \frac{M}{M - 29}}$$

Anv	Is the minimum opening for natural ventilation in m^2.
m_c	Is the actual refrigerant charge of refrigerant in the system in kg;
m_{max}	Is the allowable maxinum refrigerant charge in the system in kg, calculated according to Equation GG.8 or m^2, whichever is lower,
LFL	Is the lower flammability limit in kg/m^3;
A	Is the room area in m^2;
M	Is the molar mass of the refrigerant in kg/kmol;
g	Is the gravity acceleration of 9,81 m/s^2;
29	Is the average molar mass of air in kg/kmol.

CAUTION FOR REFRIGERANT LEAK

The installer and system specialist shall secure safety against leakage according to local regulations or standards.
The following standards may be applicable if local regulations are not available.

Introduction

Though the R410A refrigerant is harmless and incombustible itself , the room to equip the air conditioner should be large to such an extent that the refrigerant gas will not exceed the limiting concentration even if the refrigerant gas leaks in the room.

Limiting concentration

Limiting concentration is the limit of Freon gas concentration where immediate measures can be taken without hurting human body when refrigerant leaks in the air. The limiting concentration shall be described in the unit of kg/m^3 (Freon gas weight per unit air volume) for facilitating calculation.

Limiting concentration: 0.44 kg/m^3(R410A)

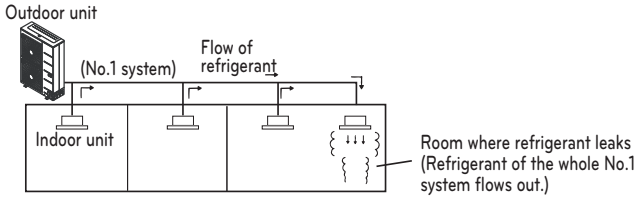

Checking procedure of limiting concentration

Check limiting concentration along following steps and take appropriate measure depending on the situation.

Calculate amount of all the replenished refrigerant (kg) per each refrigerant system.

Amount of replenished refrigerant per one outdoor unit system + Amount of additional replenished refrigerant = Total amount of replenished refrigerant in refrigerant facility (kg)

- Amount of replenished refrigerant at factory shipment
- Amount of additionally replenished refrigerant depending on piping length or piping diameter at customer

Note : In case one refrigerant facility is divided into 2 or more refrigerant systems and each system is independent, amount of replenished refrigerant of each system shall be adopted.

Calculate minimum room capacity

Calculate room capacity by regarding a portion as one room or the smaller room.

- Without partition

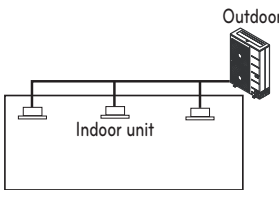

- With partition and with opening which serve as passage of air to adjoining room

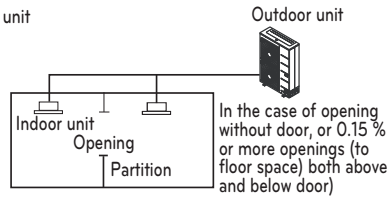

- With partition and without opening which serve as passage of air to adjoining room

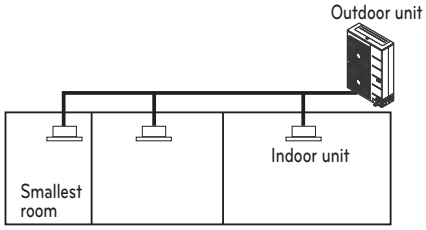

Calculate refrigerant concentration

$$\frac{\text{Total amount of replenished refrigerant in refrigerant facility (kg)}}{\text{Capacity of smallest room whereindoor unit is installed (m}^3\text{)}} = \text{Refrigerant concentration (kg/m}^3\text{) (R410A)}$$

- In case the result of calculation exceeds the limiting concentration, perform the same calculations by shifting to the second smallest, and the third smallest rooms until at last the result is below the limiting concentration.

In case the concentration exceeds the limit

When the concentration exceeds the limit, change original plan or take one of the countermeasures shown below:

- Countermeasure 1
  Provide opening for ventilation.
  Provide 0.15 % or more opening to floor space both above and below door, or provide opening without door.
- Countermeasure 2
  Provide gas leak alarm linked with mechanical ventilator.
  Reducing the outdoor refrigerant qty.

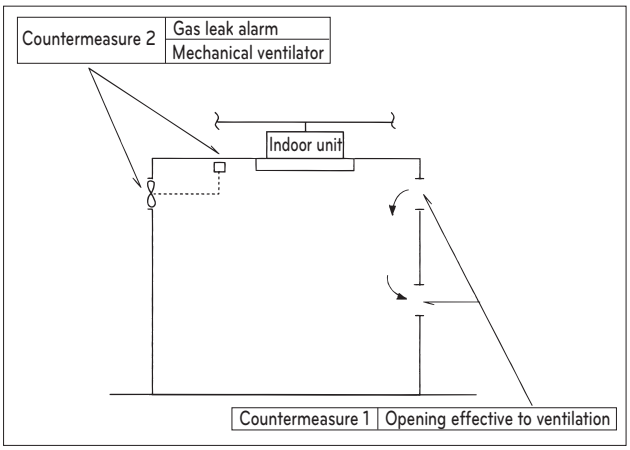

Pay a special attention to the place, such as a basement, etc. where refrigerant can stay, since refrigerant is heavier than air.

INSTALLATION GUIDE AT THE SEASIDE

Anti-Corrosion Treatment

⚠ CAUTION

- Air conditioners should not be installed in areas where corrosive gases, such as acid or alkaline gas, are produced.
- Do not install the product where it could be exposed to sea wind (salty wind) directly. It can result corrosion on the product. Corrosion, particularly on the condenser and evaporator fins, could cause product malfunction or inefficient performance.
- If outdoor unit is installed close to the seaside, it should avoid direct exposure to the sea wind. Otherwise it needs additional anticorrosion treatment on the heat exchanger.

1. Installation Atmosphere

1) If the outdoor unit is to be installed close to the seaside, direct exposure to the sea wind should be avoided. Install the outdoor unit on the opposite side of the sea wind direction.

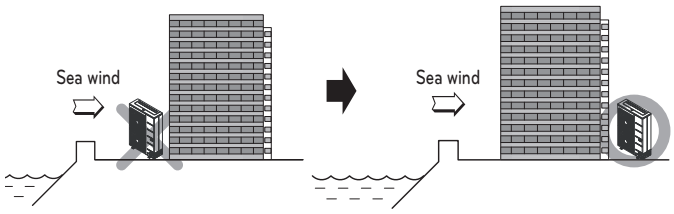

2) In case, to install the outdoor unit on the seaside, set up a windbreak not to be exposed to the sea wind.

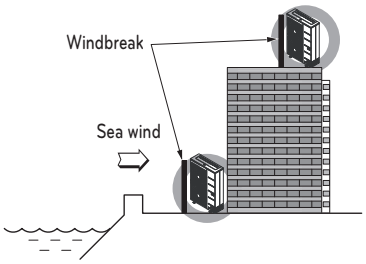

- It should be strong enough like concrete to prevent the sea wind from the sea.
- The height and width should be more than 150 % of the outdoor unit.
- It should be keep more than 70 cm of space between outdoor unit and the windbreak for easy air flow.

3) Ensure the distance between the outdoor unit and the sea shore is more than 300 m and less than 1 km.

Select a well-drained place.

- Periodic (more than once/year) cleaning of the dust or salt particles stuck on the heat exchanger by using water

2. Specification comparison between standard and Anti-Corresion specification

Pasts of Corrosion Resistance		Pasts of Corrosion Resistance
Part that contacts corrosive air	Ocean Black Fin' Heat Exchanger	Epoxy resin + Hydrophilic film (Ocean Black Fin)
	Barrier	Epoxy + polyester: 120μ ±20μ
Part that passes through the corrosive air	Front/Side/Top/Rear Panel & Rear Grille	Epoxy + polyester: 120μ ±20μ
	Base Pan	Epoxy + polyester: 120μ ±20μ
	Screws	Stainless steel

Existing criteria for selecting anti-corrosion model:

It is recommended that the outdoor unit is located over 300 m from the sea.

3. Anti-Corrosion model name

Outdoor series	1 Ø 220-240 V 50 Hz	Remark
1 Unit	ARUN040GSR0	
	ARUN050GSR0	
	ARUN060GSR0	

Outdoor series	3 Ø 380-415 V 50 Hz	Remark
1 Unit	ARUN040LSR0	
	ARUN050LSR0	
	ARUN060LSR0	

- Anti-corrosion product is a special specification and is shipped from the plant 45 days after the order is placed.

* LG Special Guide is needed for Anti-corrosion model.

4. Installation and maintenance

Even though the Anti-corrosion model has reinforced material or coating, it is still not completely safe from corrosion.

And for this reason, you need to increase the effect of preventing corrosion through installation planning and maintenance/repair.

(1) Install the product where it will avoid salt water splash and beach sand as much as possible.
- Install the machine in the direction the wind blows away from the building.
- If you inevitably have to install the machine on by the shore, install a fence to block the wind to avoid direct contact from sea wind.
- Be careful of the installation direction. (The level of corrosion differs when the unit is parallel or vertical to the coast line.)

(2) Try to install the unit so that the particles from the sea side attached on the exterior panel can be sufficiently cleaned by the rain.

(3) Because the water collected within the floor of the outdoor unit significantly accelerates the corrosion process, make sure to install the unit so that water is well drained considering the inclination etc.

(4) For the outdoor unit installed on the sea shore, periodically wash the unit with clean water to remove any salt attached on the unit.

(5) Install the unit where it is well drained. Especially, secure good drainage at the floor part.

(6) Always repair dents caused from installation, maintenance etc.

(7) Periodically check the condition of the machine (Set water resistance treatment or replace parts, if necessary.)

(8) When you are not running the machine for a long period of time, such as during the off season, put a cover on the outdoor unit.

(9) Sufficiently maintain the machine well. (When installing the anti-corrosive coating such as water resistant grease or wax, repeat the coating every 3 months) Also, when install the machine in a special environment, you need to take separate consideration sufficiently.

Model Designation

Product information

- Product Name : Air conditioner
- Model Name :

Product Sales Name	Model Factory Name
ARUx***ySSz, ARUx***ySRz x = N(Heat Pump), V (Cooling only) y = L (3 Ø, 380-415 V, 50 Hz), G(1 Ø, 220-240 V, 50 Hz) z = Series No. (0, 5) *** = Numeric; (Cooling capacity)	

- Additional information : Serial number is refer to the bar code on the product.

Airborne Noise Emission

The A-weighted sound pressure emitted by this product is below 70 dB.

** The noise level can vary depending on the site.

The figures quoted are emission level and are not necessarily safe working levels.

Whilst there is a correlation between the emission and exposure levels, this cannot be used reliably to determine whether or not further precautions are required.

Factor that influence the actual level of exposure of the workforce include the characteristics of the work room and the other sources of noise, i.e. the number of equipment and other adjacent processes and the length of time for which an operator exposed to the noise. Also, the permissible exposure level can vary from country to country.

This information, however, will enable the user of the equipment to make a better evaluation of the hazard and risk.



Manufacturer :
LG Electronics Inc.
84, Wanam-ro, Seongsan-gu, Changwon-si, Gyeongsangnam-do, KOREA

UK Importer :
LG Electronics U.K. Ltd
Velocity 2, Brooklands Drive, Weybridge, KT13 0SL

Eco design requirement

- The information for Eco design is available on the following free access website.
  https://www.lg.com/global/support/cedoc/cedoc