Printing Specification

1. Model Description

Model/Item Name	: 65NANO95TNA	Brand name	: LG	Part number	: MFL71695515
Suffix	: MEA (Except for MT/MF)	Product	: B2C TV	(Revision number)	(REV00)

2. Printing Specification

1. Trim size (Format) (W X H)	: 296 mm x 420 mm, Folded (148 mm x 105 mm)		
2. Printing colors			
• Cover	: -	• Inside	: 4 Color (Cyan, Magenta, Yellow, Black)
3. Stock (Paper)			
• Cover	: -	• Inside	: Uncoated, wood-free paper 80 g/㎡
4. Bindery	: One sheet (3 Folded)	5. Number of pages	: 16
6. Language	: ENG/ARA/FRE/POR/PER/THA/VIE (7)		

3. Pagination sheet

Folded Step

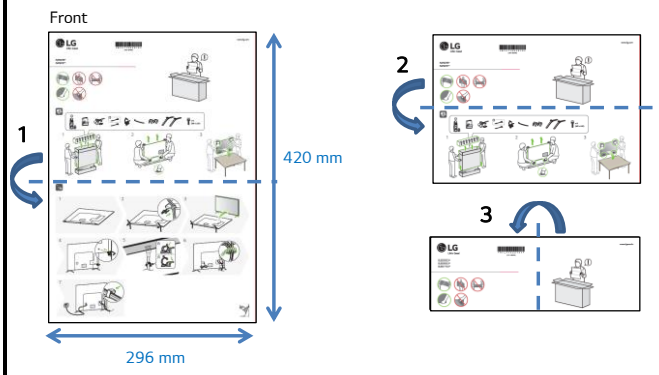

Folded

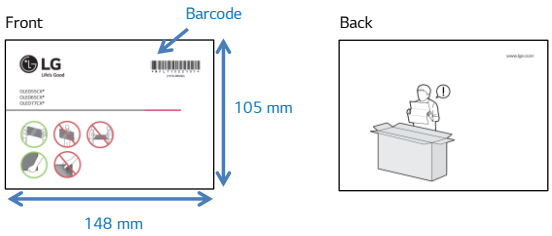

4. Origin Notification

www.lg.com
P/No : MFL69707613 (1708-REV03)
Printed in Korea
Copyright © 2017 LG Electronics Inc. All Rights Reserved.

Changes the Country name.
Printed in [Country Name]

[Country Name]	
LGERS/ LGEMX :	Mexico
LGEKR:	Korea
LGEMA:	Poland
LGEND:	China
Others:	Each Country name.

NOTE

[Restriction of Hazardous Substances]
Hazardous substances on this product should be satisfied by substance regulation of Level A-I, A-II, SVHC according to LG(52)B-5011 standard.
Especially, Part should be followed and controlled the following specification.
(1) Hazardous substances test report should be submitted when part certification test and first mass production.
(2) Especially, Don't use or contain lead (Pb) and cadmium (Cd) in ink.

5. Changes

Rev. Number	MM/DD/YYYY	Signature	ECO Number	Change Contents	
REV07					
REV06					
REV05					
REV04					
REV03					
REV02					
REV01					
REV00	02/25/2020	Bohyeon.Yu	-	Checked :	Taeho.Bae
				Approved :	Jongok. Kim

LG
Life's Good

MFL71695513
(2007-REV00)

www.lg.com

NANO95*
NANO97*

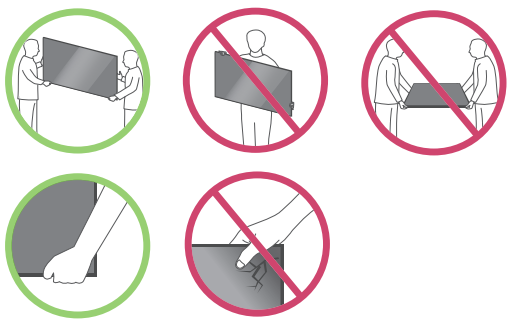

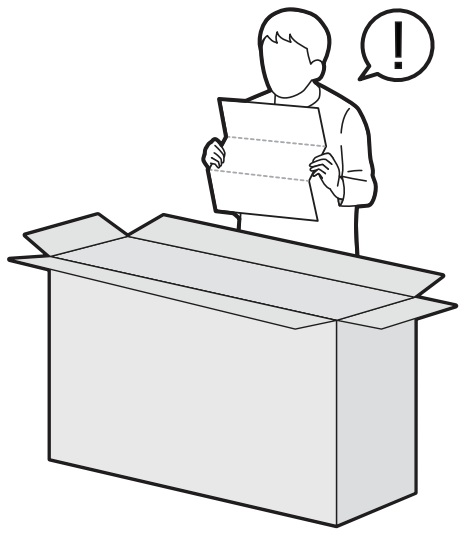

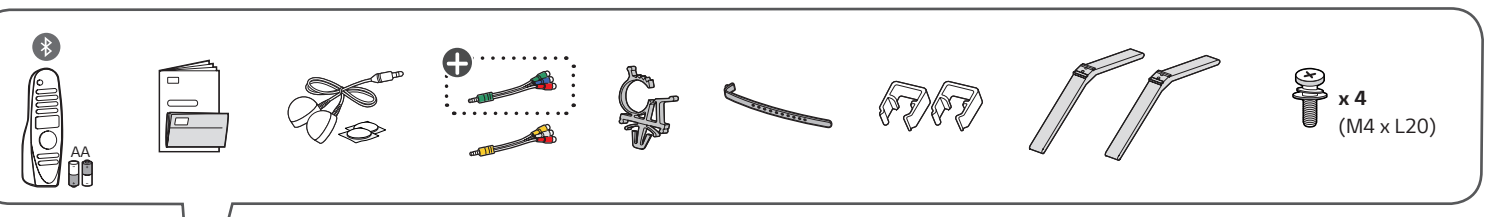

1

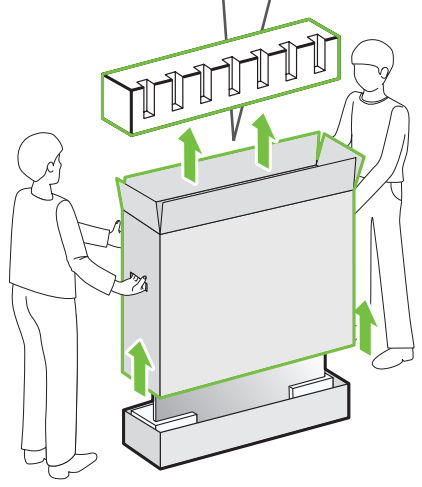

2

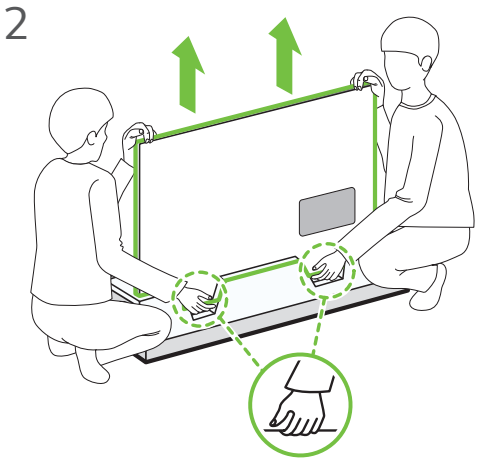

3

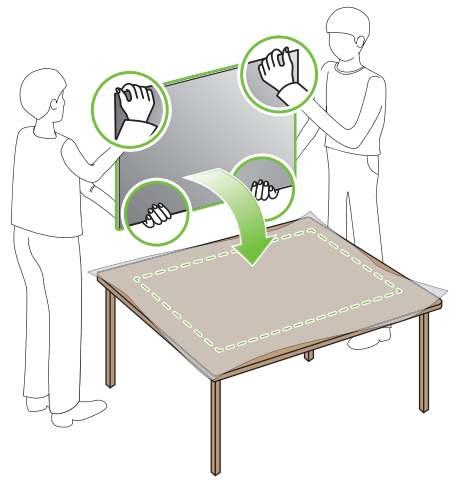

1

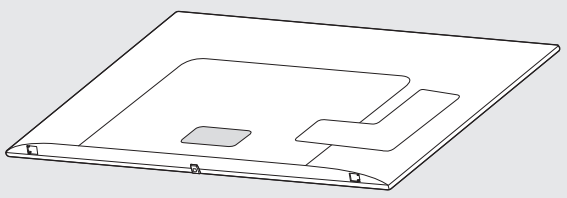

2

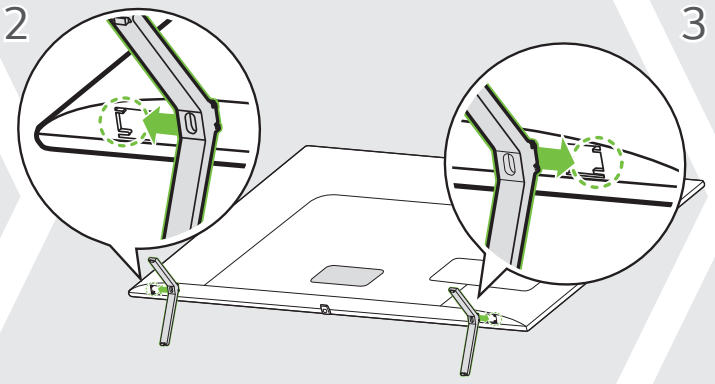

3

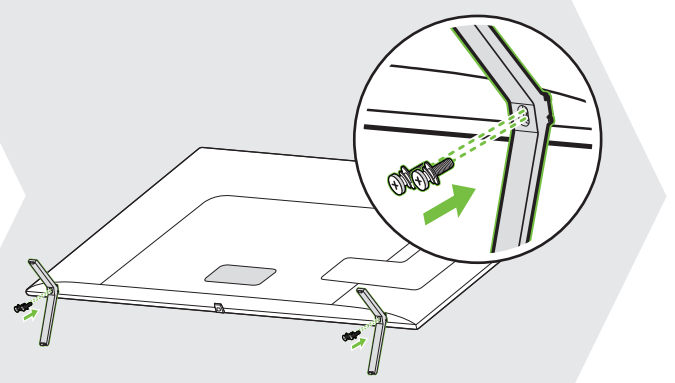

4

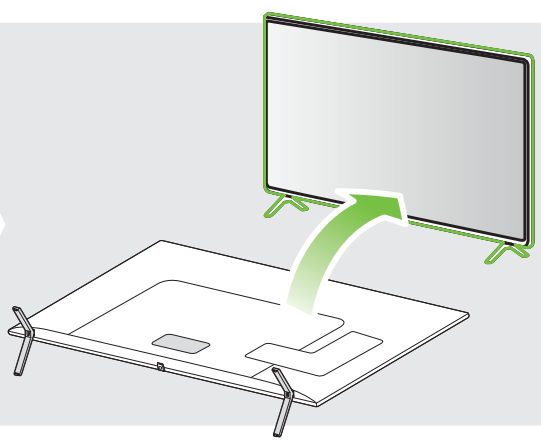

5

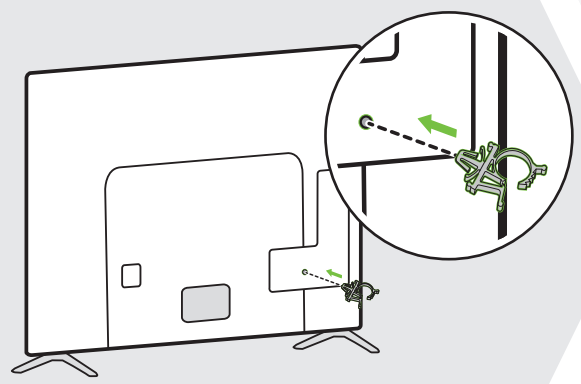

6

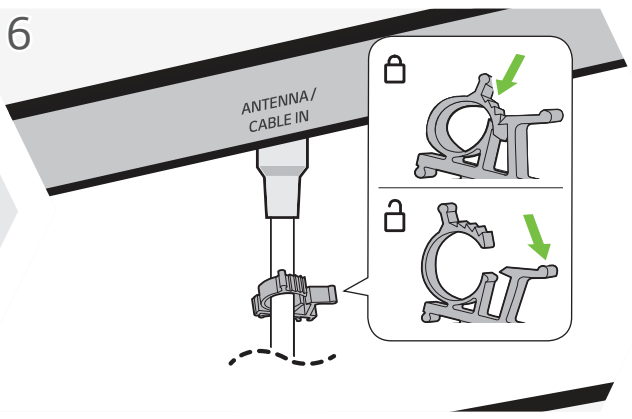

7



8

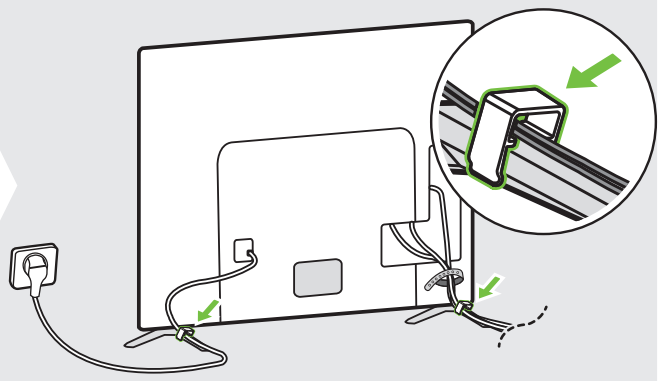

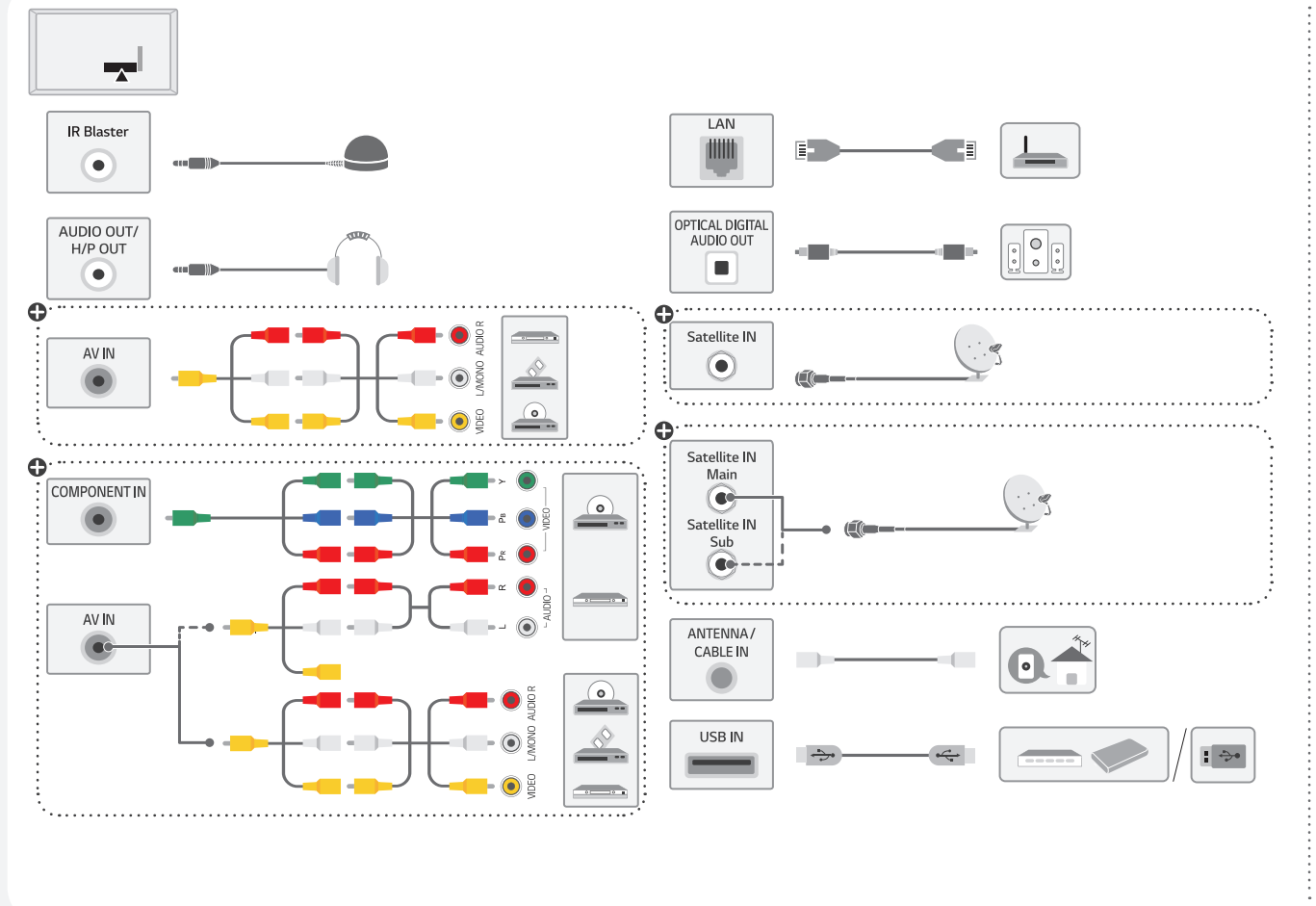

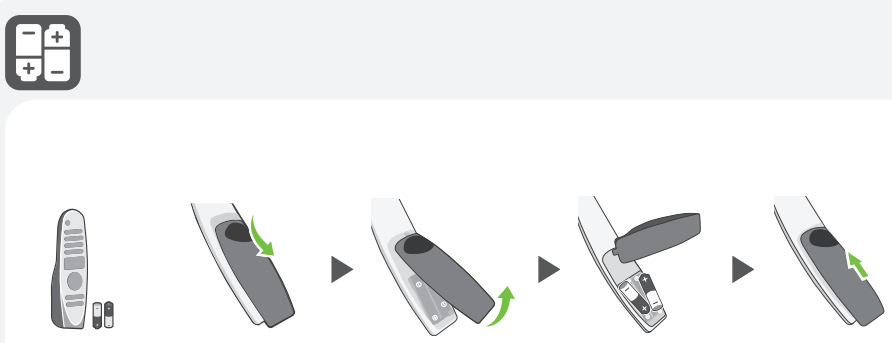



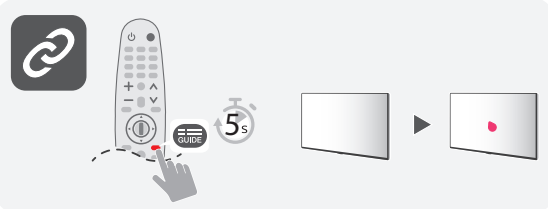



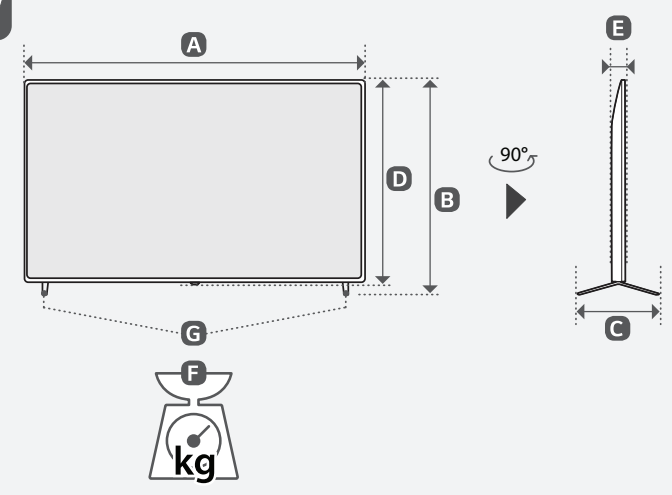

	A	B	C	D	E	F	F-G
	(mm)					(kg)	
65NANO95TNA 65NANO95VNA	1454	900	287	840	68.9	28.1	27.7
65NANO97VNA	1454	900	287	840	68.9	28.5	28.1
lc`srsf_l b_w_				AC 100-240 V ~ 50 / 60 Hz			

Indonesia • Baca **Keamanan dan Referensi.**

: Tergantung model