Scan the QR code to see the manual.

OWNER'S MANUAL

INDUCTION HOB

Before beginning installation, read these instructions carefully. This will simplify installation and ensure that the product is installed correctly and safely. Leave these instructions near the product after installation for future reference.

ENGLISH

CI5Z2420BN

MFL71950008
Rev.00_090125

www.lg.com

Copyright © 2025 LG Electronics. All Rights Reserved

TABLE OF CONTENTS

This manual may contain images or content that may be different from the model you purchased.

This manual is subject to revision by the manufacturer.

SAFETY INSTRUCTIONS

READ ALL INSTRUCTIONS BEFORE USE 3
WARNING 3
CAUTION 7

INSTALLATION

Product Overview 9
Installation 10

OPERATION

Introduction to Induction Cooking 14
Cookware 14
Using the Hob Elements 16

SMART FUNCTIONS

LG ThinQ Application 22

MAINTENANCE

Care and Cleaning 24

TROUBLESHOOTING

Before Calling for Service 26

APPENDIX

Product Fiche 30

SAFETY INSTRUCTIONS

READ ALL INSTRUCTIONS BEFORE USE

The following safety guidelines are intended to prevent unforeseen risks or damage from unsafe or incorrect operation of the appliance. The guidelines are separated into '**WARNING**' and '**CAUTION**' as described below.

Safety Messages

⚠	This symbol is displayed to indicate matters and operations that can cause risk. Read the part with this symbol carefully and follow the instructions in order to avoid risk.
⚠	**WARNING** This indicates that the failure to follow the instructions can cause serious injury or death.
⚠	**CAUTION** This indicates that the failure to follow the instructions can cause the minor injury or damage to the product.

WARNING

⚠ WARNING

- To reduce the risk of explosion, fire, death, electric shock, injury or scalding to persons when using this product, follow basic precautions, including the following:

Installation

- Disconnect the appliance from the mains electricity supply before carrying out any work or maintenance on it.
- Connection to a good earth wiring system is essential and mandatory.

- Alterations to the domestic wiring system must only be made by a qualified electrician.
- In order to avoid a hazard, this appliance must be installed according to these instructions for installation.
- This appliance is to be properly installed and earthed only by a suitably qualified person.
- This appliance should be connected to a circuit which incorporates an isolating switch providing full disconnection from the power supply.
- Failure to install the appliance correctly could invalidate any warranty or liability claims.
- If the supply cord is damaged, it must be replaced by the manufacturer, its service agent or similarly qualified persons in order to avoid a hazard.
- The appliance must not be installed behind a decorative door or cover in order to avoid overheating.
- Do not repair or replace any part of the appliance. All servicing should be done only by a qualified technician to avoid the risk of personal injury and damage to the appliance.
- Never modify or alter the construction of an appliance such as removal of panels, wire covers or any other permanent part of the product.

Operation

- Do not cook on a broken or cracked hob. If the hob surface should break or crack, switch the appliance off immediately at the mains power supply (wall switch) and contact a qualified technician.
- Switch the hob off at the wall before cleaning or maintenance.
- This appliance complies with electromagnetic safety standards. However, persons with cardiac pacemakers or other electrical implants (such as insulin pumps) must consult with their doctor or implant manufacturer before using this appliance to make sure that their implants will not be affected by the electromagnetic field.
- During use, accessible parts of this appliance will become hot enough to cause burns.

- Do not let your body, clothing or any item other than suitable cookware contact the glass until the surface is cool.
- Metallic objects such as knives, forks, spoons and lids should not be placed on the hob surface since they can get hot.
- Keep children away.
- Handles of saucepans may be hot to touch. Check saucepan handles do not overhang other cooking zones that are on. Keep handles out of reach of children.
- Never leave the appliance unattended when in use. Boilover causes smoking and greasy spillovers that may ignite.
- Never leave any objects or utensils on the appliance.
- Care should be taken to avoid touching heating elements.
- Never use your appliance for warming or heating the room.
- After use, always turn off the cooking zones and the hob as described in this manual (i.e. by using the control panel). Do not rely on the pan detection feature to turn off the cooking zones when you remove the pans.
- Children should be supervised to ensure that they do not play with the appliance.
- Children or persons with a disability which limits their ability to use the appliance should have a responsible and competent person to instruct them in its use. The instructor should be satisfied that they can use the appliance without danger to themselves or their surroundings.
- Do not store items of interest to children in cabinets above the appliance. Children climbing on the hob could be seriously injured.
- Do not leave children alone or unattended in the area where the appliance is in use.
- This appliance is not intended for use by persons (including children) with reduced physical, sensory or mental capabilities, or lack of experience and knowledge, unless they have been given supervision or instruction concerning use of the appliance by a person responsible for their safety.

- Children less than 8 years of age shall be kept away unless continuously supervised.
- Keep the appliance and its cord out of reach of children less than 8 years.
- Keep pets away from the product to avoid risk of fire or burns. Do not allow pets to climb on the product even when it is not in operation.
- No combustible material or products should be placed on this appliance at any time.
- If the surface is cracked, switch off the appliance to avoid the possibility of electric shock. Do not reuse your hob until the glass surface has been changed by technical specialist.
- The appliance and its accessible parts become hot during use.
- Danger of fire: Do not store items on the cooking surfaces.
- Never keep any combustible items or aerosol cans in a drawer located under the hob.
- Unattended cooking on a hob with fat or oil can be dangerous and may result in fire. NEVER try to extinguish a fire with water, but switch off the appliance and then cover flame e.g. with a lid or a fire blanket.
- Use only hob guards designed by the manufacturer of the cooking appliance or indicated by the manufacturer of the appliance in the instructions for use as suitable or hob guards incorporated in the appliance. The use of inappropriate guards can cause accidents.

Maintenance

- Cleaning and user maintenance shall not be made by children without supervision.
- Do not repair or replace any part of the appliance unless specifically recommended in the manual. All other servicing should be done by a qualified technician.
- If the supply cord is damaged, it must be replaced by the manufacturer, its service agent or similarly qualified persons in order to avoid a hazard.

CAUTION

⚠ CAUTION

- To reduce the risk of injury to persons, malfunction, or damage to the product or property when using the appliance, follow basic safety precautions, including the following:

Installation

- Take care - panel edges are sharp.
- Make this information available to the person responsible for installing the appliance as it could reduce your installation costs.
- Failure to install the appliance correctly could invalidate any warranty or liability claims.

Operation

- The razor-sharp blade of a hob scraper is exposed when the safety cover is retracted. Use with extreme care and always store safely and out of reach of children.
- Never use your appliance as a work or storage surface.
- Do not place or leave any magnetisable objects (e.g. credit cards, memory cards) or electronic devices (e.g. computers, MP3 players) near the appliance, as they may be affected by its electromagnetic field.
- Do not place or drop heavy objects on your hob. Doing so can cause the hob surface to crack.
- Do not stand on your hob.
- Do not use pans with jagged edges or drag pans across the glass surface as this can scratch the glass.
- This appliance is intended to be used in household and similar domestic applications such as:
  - staff kitchen areas in shops, offices and other working environments
  - farm houses

- by clients in hotels, motels and other residential type environments
- bed and breakfast type environments.

- The appliance is not intended to be operated by means of an external timer or separate remote-control system. This does not apply if operation with appliances included in EN 50615 is switched off.
- The cooking process has to be supervised. A short term cooking process has to be supervised continuously.

Maintenance

- Do not use scourers or any other harsh abrasive cleaning agents to clean your hob, as these can scratch the glass.
- A steam cleaner is not to be used.
- Do not use a steam cleaner to clean your hob.

INSTALLATION

Product Overview

Parts and Features

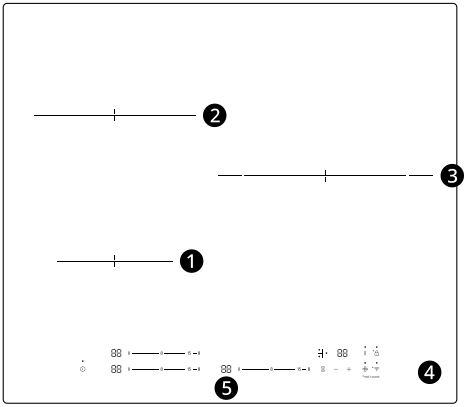

❶	Max. 1400/2000 W Zone
❷	Max. 2300/3300 W Zone
❸	Max. 2800/3700 W Zone
❹	Glass Plate
❺	Control Panel

Accessories

❶

❶ Retainer Brackets (4 ea)

Specifications

Model	CI5Z2420BN
Cooking Zones	3 zones
Supply Voltage	220-240 V~ 50/60 Hz 380-415 V 3N~ 50/60 Hz
Maximum Connected Load Power	7400 W

Model	CI5Z2420BN
Appliance Dimensions Width X Depth X Height (mm)	590 X 520 X 56
Countertop Cutout Dimensions Width X Depth (mm)	560 X 480

Dimensions are approximate.

Installation

Dimensions and Clearances

Cut out the work surface according to the sizes shown in the drawing.

For the purpose of installation and use, a minimum of 5 cm distance shall be preserved around the cutout.

Be sure the thickness of the work surface is at least 10 mm. Select heat-resistant and insulated work surface material to avoid electrical shock and larger deformation caused by heat radiation from the hob. Wood and similar fibrous or hygroscopic material shall not be used as work surface material unless impregnated. As shown below:

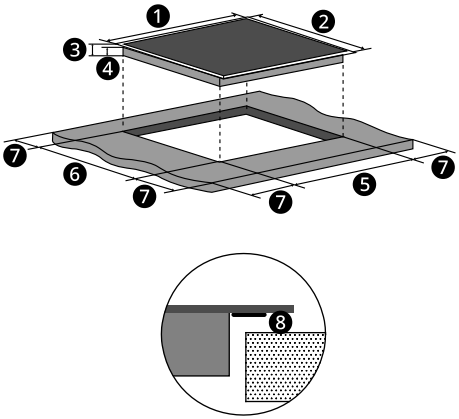

❶ 590 mm ❷ 520 mm ❸ 56 mm
❹ 49 mm ❺ 560 mm - 562 mm
❻ 480 mm - 482 mm ❼ Min. 50 mm
❽ Seal

Under any circumstances, make sure the hob is well ventilated and the air inlet and outlet are not blocked. Ensure the hob is in a good working situation, as shown below.

NOTE

- The safety distance between the hob and the cupboard above the hob ❶ should be a minimum of 500 mm when there is no range hood fitted. If there is a range hood fitted, then the safety distance specified by the manufacturer of the range hood must be maintained between the cooktop hob and the range hood above it.

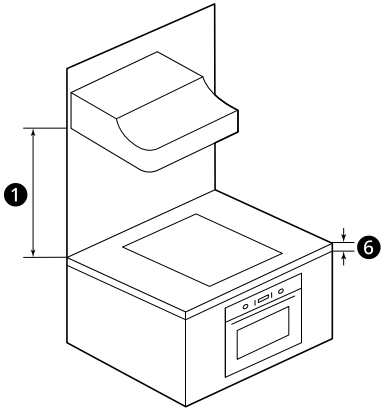

Oven

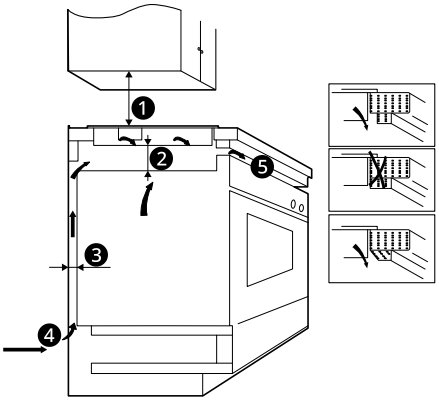

Drawer

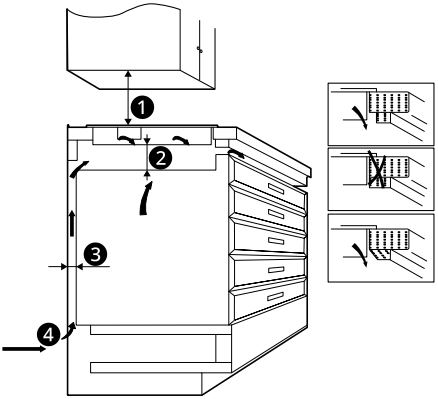

❶ Min. 500 mm ❷ Min. 15 mm ❸ Min. 20 mm
❹ Air intake ❺ Air exit 3 mm
❻ Min. 10 mm

⚠ WARNING

- **Ensuring Adequate Ventilation**

  Make sure the hob is well ventilated and that air inlet and outlet are not blocked. In order to avoid accidentally touching the hot bottom of the hob, or unexpected electric shock during operation, it is necessary to fit a wooden insert, fixed by screws, at a minimum distance of 15 mm from the bottom of the hob. Follow the requirements below.

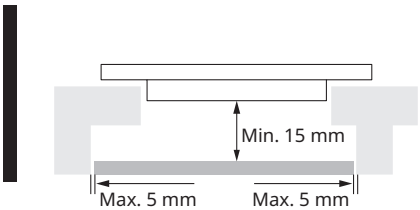

- There are ventilation holes around outside of the hob. YOU MUST ensure these holes are not blocked by the worktop when you put the hob into position.
- The glue, which join the plastic or wooden material to the furniture has to resist to 150 °C to avoid the unstuck of the paneling.
- The rear wall, adjacent and surrounding surfaces must therefore be able to withstand a temperature of 90 °C.

ENGLISH

Installing the Appliance

Before Installing the Hob

- Make sure that the work surface is square and level, and no structural members interfere with space requirements. An uneven surface can cause the hob glass to crack unexpectedly due to unequal surface pressures.
- Make sure that the work surface is made of a heat-resistant and insulated material.
- If the hob is installed above an oven, the oven must have a built-in cooling fan.
- The installation must comply with all clearance requirements and applicable standards and regulations.
- Make sure that a suitable isolating switch providing full disconnection from the mains power supply is incorporated in the permanent wiring, mounted and positioned to comply with local wiring rules and regulations.
- A device must be provided in the electrical installation that allows the appliance to be disconnected from the mains at all poles with a contact opening width of at least 3 mm. Suitable isolation devices include line protecting cut - outs, fuses (screw type fuses are to be removed from the holder), earth leakage trips and contactors.
- The isolating switch must be easily accessible to the customer with the hob installed.
- Consult local building authorities and by-laws if in doubt regarding installation.
- Use heat-resistant and easy-to-clean finishes (such as ceramic tiles) for the wall surfaces surrounding the hob.
- The kitchen unit in which the appliance is fitted must satisfy the stability requirements of DIN 68930.

After Installing the Hob

- Maker sure that the power cord is not accessible through cupboard doors or drawers.
- Make sure that there is adequate flow of fresh air from outside the cabinetry to the base of the hob.
- If the hob is installed above a drawer or cupboard space, a thermal protection barrier must be installed below the base of the hob.
- The isolating switch must be easily accessible by the customer.

Before Locating the Fixing Brackets

- The appliance should be placed on a stable, smooth surface. Do not apply force onto the buttons protruding from the hob.

Adjusting the Bracket Position

Fix the hob on the work surface by screwing 2 brackets on the bottom of hob(see picture) after installation. Adjust the bracket position to suit the particular work top thickness.

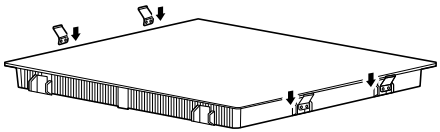

⚠ WARNING

- Under any circumstances, make sure that the brackets cannot come into contact with the inner surfaces of the worktop after installation.

⚠ CAUTION

- The hob must be installed by qualified technicians. We have technicians available for such service. Never carry out the installation by yourself.
- The hob must not be installed directly above a dishwasher, fridge, freezer, washing machine or clothes dryer, as the humidity may damage the hob.
- The hob shall be installed so that better heat radiation can be ensured to enhance its reliability.
- The wall and induced heating zone above the installation surface shall withstand heat.

Connecting the hob to the mains power supply

This hob must be connected to the mains power supply only by a qualified electrician.

Before connecting the hob to the mains power supply, it is the Electricians responsibility to check that:

- The domestic wiring system is suitable for the power drawn by the hob.
- The voltage corresponds to the value given in the rating plate.
- The power supply cable sections can withstand the load specified on the rating plate.

Connect the hob to the mains power supply. Do not use adapters, reducers, or branching devices, as they can cause overheating and fire.

The power supply cable must not touch any hot parts and must be positioned so that its temperature will not exceed 75 °C at any point.

Check with an electrician whether the domestic wiring system is suitable without alterations.

Any alterations must only be made by a qualified electrician.

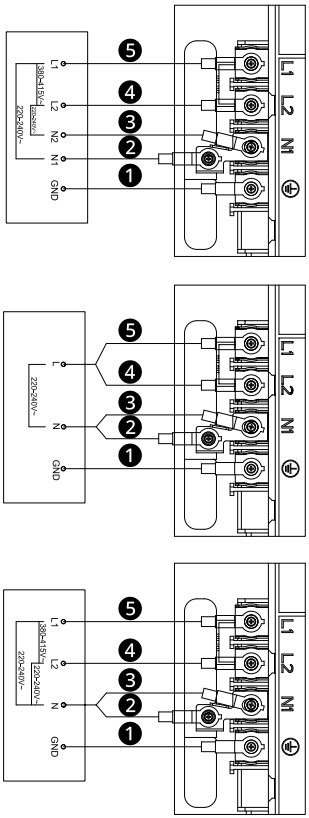

❶ Yellow / Green

❷ Grey

❸ Blue

❹ Brown

❺ Black

- If the power cord is damaged or needs to be replaced, contact an LG Electronics Customer Information Centre.
- The installer must ensure that the correct electrical connection has been made and that it is compliant with safety regulations.
- If the appliance is being connected directly to the mains an omnipolar circuit-breaker must be installed with a minimum opening of 3 mm between contacts.
- The power cord must not be bent or compressed.
- The power cord must be checked regularly and replaced by authorised technicians only.
- Once the hob is connected to the mains supply, check that all cooking zones are ready for use by briefly switching each on in turn at the maximum setting with suitable cookware.

⚠ WARNING

- Make sure that the bottom surface and the power cord of the hob do not come into contact.

OPERATION

Introduction to Induction Cooking

⚠ CAUTION

- People with a heart pace maker should consult with their doctor before using this unit.

How Induction Cooking Works

Induction cooking is a safe, advanced, efficient and economical cooking technology. It works by electromagnetic vibrations generating heat directly in the cookware, rather than indirectly through heating the glass surface. The glass becomes hot only because the pan eventually warms it up.

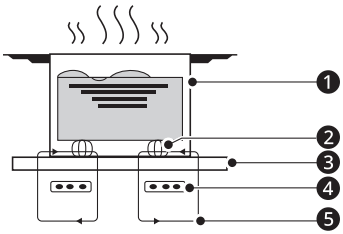

❶ Iron Pot

❷ Magnetic Circuit

❸ Ceramic Glass Plate

❹ Induction Coil

❺ Induced Currents

Before Using your Induction Hob

- Read this guide, taking special note of the SAFETY INSTRUCTIONS chapter.
- Remove any protective film that may still be on your induction hob.

Cookware

Choosing the Right Cookware

NOTE

- When purchasing cookware for use on the induction hob, look for cookware identified by the manufacturer as "induction ready" or "induction capable", or that is marked by the manufacturer as specifically designed for induction cooking.
- The base material of the cookware must be magnetic for the cooking elements to activate. Use a magnet to check if the cookware base material is suitable. If the magnet sticks to the bottom of the cookware, the cookware can be used for induction cooking.

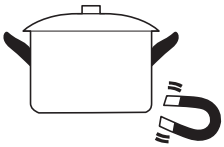

- Cookware made from the following materials is not suitable: pure stainless steel, aluminium or copper without a magnetic base, glass, wood, porcelain, ceramic, and earthenware.

- Do not use cookware with jagged edges or a curved base.

- Make sure that the base of your cookware is smooth, sits flat against the glass, and is the same size as the cooking zone. Use cookware whose diameter is as large as the graphic of the zone selected. Using a pot slightly wider will ensure that energy will be used with maximum efficiency. If you use a pot smaller than the cooking zone, efficiency could be less than expected. Pot smaller than 120 mm could be

undetected by the hob. Always centre your cookware on the cooking zone.

- Always lift cookware directly off the Induction hob.

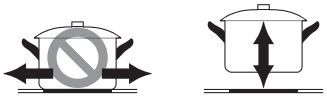

Detection of Small Articles

When an unsuitable size or non-magnetic cookware (e.g. aluminium), or some other small item (e.g. knife, fork, key) has been left on the hob, the hob automatically goes to standby after 1 minute.

Using the Hob Elements

Using the Control Panel

Control Panel

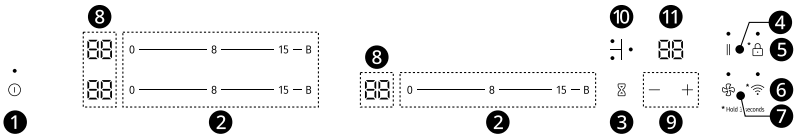

❶ **ON/OFF** Button

❷ Power Control

❸ **Timer** Button

❹ **Pause** Button

❺ **Keylock** Button

❻ Wi-Fi Connection Button

❼ Hood Connection Button

❽ Power Setting Display

❾ **+/-** Buttons

❿ **Timer** Indicator

⓫ **Timer** display

- To operate the buttons, press the desired button with the ball of your finger.

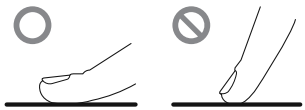

- You will hear a beep each time when you press.
- Make sure the buttons are always clean, dry, and that there is no object (e.g. a utensil or a cloth) covering them. Even a thin film of water may make the buttons difficult to operate.

Using the Cooking Zones

1 Press the **ON/OFF** button for one second. After power on, the buzzer beeps once, all displays show “0” or “00”, indicating that the induction hob has entered the state of standby mode.

2 Place suitable cookware on the cooking zone that you wish to use.

- Make sure the bottom of the cookware and the surface of the cooking zone are clean and dry.

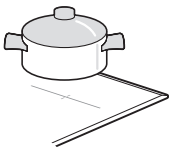

3 Press and slide the power control, the power setting display corresponding to the button will flash.

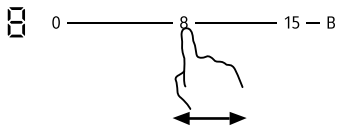

Select a power setting by pressing the power control.

- If you don't choose a power setting within 1 minute, the induction hob will automatically switch off. You will need to start again at step 1.
- You can modify the power setting at any time during cooking by repeating of this step.

NOTE

- If the display flashes "u" with the power setting, this means that:
  - you have not placed cookware on the correct cooking zone or,
  - the cookware you're using is not suitable for induction cooking or,
  - the cookware is too small or not properly centered on the cooking zone.
- No heating takes place unless there is suitable cookware on the cooking zone.
- The display will automatically turn off after 1 minute if no suitable cookware is placed on it.
- It is normal for the hob to make a gentle buzzing or whirring sound when in the cooking mode.
- A fan noise is also normal to be heard when the Hob's electronics become hot during and cooking.

Power Settings

The settings below are guidelines only. The exact setting will depend on several factors, including your cookware and the amount you are cooking. Experiment with the induction hob to find the settings that best suit you.

Power setting	Suitability
1 - 2	• Delicate warming for small amounts of food • Melting chocolate, butter, and foods that burn quickly • Gentle simmering • Slow warming
3 - 5	• Reheating • Rapid simmering • Cooking rice
6 - 11	• Pancakes
12 - 14	• Sautéing • Cooking pasta
15	• Stir-frying • Searing • Bringing soup to the boil • Boiling water
B	• Bringing soup to the boil quickly • Boiling water quickly

Finish Cooking

1 Press the power control that you wish to switch off. Turn the cooking zone off by pressing or sliding the slider to "0". Make sure the display shows "0".

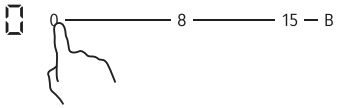

2 Turn the whole hob off by pressing the **ON/ OFF** button.

⚠ CAUTION

- **Beware of hot surfaces**

  “H” and “h” will show which cooking zone is too hot to touch in 2 steps. It will disappear when the surface has cooled down to a safe temperature. It can also be used as an energy saving function if you want to heat further cookware, use the hob that is still hot.

  - "H": Very hot residual heat (heat retention)
  - "h": residual heat

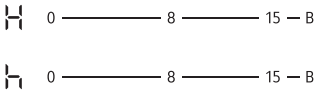

Using the Boost Function

Activate the boost function

With the boost function, large quantities of water can be heated more quickly than with the corresponding power setting 15.

⚠ WARNING

- Never use the boost function to preheat empty cookware or to heat oil, butter or lard. The cookware may be damaged and the fat or grease may catch fire if overheated.

NOTE

- The function can work in any cooking zone.
- If the previous selected setting was level 0, after automatically switch off of the boost function power setting 15 will set.
- Under certain conditions, the boost function may automatically switch off to protect the electronic components inside the hob. The power setting returns to its the previous selected.
- The cooking zones have a maximum power available to them. If this power range is exceeded by switching on the boost function, the power setting of cooking zone is automatically reduced.

1 Press the power control.

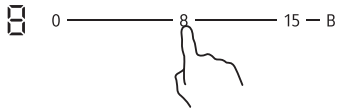

2 Press or slide the "B" button. Make sure the display shows “b”.

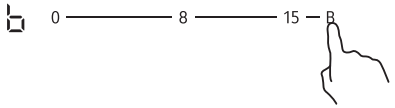

Cancel the boost function

1 Press the power control that you wish to cancel the boost function and set the desired power setting.

- The function can work in any cooking zone.
- If the previous selected setting was level 0, after automatically switch off of the boost function power setting 15 will set.

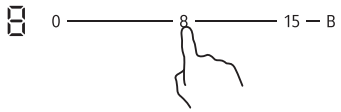

Using the Timer

- You can set it to turn one or more cooking zones off after the set time is up. The maximum setting time is 99 minutes.

Setting the timer to turn one or more cooking zones off automatically

1 If the cooking zone is in use, press the **Timer** button repeatedly until the indicator of a necessary cooking zone comes on. The timer indicator will start flashing and "00" will show in the timer display.

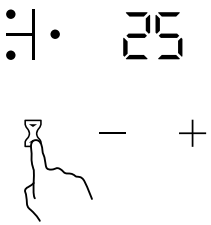

2 Set the time by pressing the **+/-** buttons.

- Hint: Press the **+/-** buttons once to decrease or increase by 1 minute.
- Press and hold the **+/-** buttons to decrease or increase by 10 minutes.

3 When the timer is set, it will begin to count down immediately.

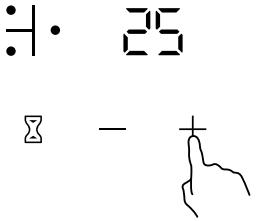

4 When cooking timer expires, the corresponding cooking zone will be switched off automatically.

NOTE

- Other cooking zones will keep operating if they were turned on previously.

To see the remaining time

1 Press the **Timer** button repeatedly until the indicator of the necessary cooking zone comes on.

Modifying the Timer

1 Press the **Timer** button repeatedly until the indicator of the necessary cooking zone comes on.

2 Set the time by pressing the **+/-** buttons.

Canceling the Timer

1 Press the **Timer** button repeatedly until the indicator of a necessary cooking zone comes on.

2 Press and hold the " - " button on **Timer**, the timer decreases to "00" and the timer is cancelled.

Locking the Buttons

- You can lock the buttons to prevent unintended use (for example children accidentally turning the cooking zones on).
- When the buttons are locked, all buttons are disabled.

To lock the buttons

1 Press the **Keylock** button for 3 seconds.

2 The timer display shows "Lo" and the timing time flashes alternately

To unlock the buttons

1 Press the **Keylock** button for 3 seconds.

NOTE

- When the hob is in the lock mode, all the buttons are disabled except the **ON/OFF** button. You can always turn the induction hob off with the **ON/OFF** button in an emergency, but you will need to unlock the hob before the next operation.

Using the Pause Mode

- The pause function reduces the power setting of a cooking zone to level 1 and maintains it at that level until deactivated. This function can be used to briefly interrupt and then continue the cooking process.
- When entering the pause mode, all the buttons except the **ON/OFF** button are disabled.

To enter pause mode

1 Press the **Pause** button.

2 The timer display and the working power setting display will display "||"

To exit pause mode

1 Press the **Pause** button to return the cooking zone to the previous power setting.

NOTE

- When the hob is in the pause mode, all the buttons are disabled, except the **ON/OFF** button. You can always turn the induction hob off with the **ON/OFF** button.

Default Working Times

Auto shut down is a safety protection function for your induction hob. It shuts down automatically if ever you forget to turn off your cooking. The default working times for various power settings are shown in the below table:

Power setting	Default working times (hour)
1-3	6
4-6	5
7-9	4
10-15	1.5

When the cookware is removed, the induction hob will stop heating immediately and the hob automatically switches off after 1 minute.

Special Function

Wi-Fi connection

- Press the **Wi-Fi** connection button for 3 seconds, the **Wi-Fi** LED turns ON. **Wi-Fi** function is ON. Follow the instructions in the **LG ThinQ** application on your smartphone for using the **Wi-Fi** function.

Hood connection

- This product features a Wi-Fi device that you can use to connect the hob to LG hoods. Through the **Wi-Fi** connection, you can use the hood connection on the **LG ThinQ** application. Activate **Wi-Fi** connection. Press the hood connection button, the hood LED is ON. Hood connection is ON.

NOTE

- Hood connection will not work if there are any Wi-Fi connectivity issues or faults, connection problems or any faults, malfunctions, or errors caused by network connection.

Power Limit Mode

Enables the total power of the hob to be limited, if necessary, based on the conditions of your electrical installation.

1 Press the **Keylock** button for 3 seconds in power off to enter the lock mode.

2 Press the **Timer** button for 3 seconds and hear the buzzer ring.

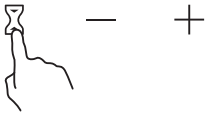

3 Press the lower left boost button to enter the power limit mode.

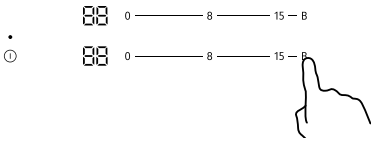

4 Press the **keylock** button repeatedly to select maximum connected load power.

Display	Maximum power
25	2500 W
35	3500 W
45	4500 W
60	6000 W
74	7400 W

5 Press the **ON/OFF** button to confirm the current power of the hob and exit the power limit mode.

SMART FUNCTIONS

LG ThinQ Application

This feature is only available on models with Wi-Fi.

The **LG ThinQ** application allows you to communicate with the appliance using a smartphone.

LG ThinQ Application Features

Communicate with the appliance from a smartphone using the convenient smart features.

Hood pairing
Allows you to choose which hood to work with your induction.

Monitoring
This function helps you check the operation status of the product, lock status, heat strength for each burner, and timer.

Usage time monitoring
This function helps you check the total amount of time used by each burner today, weekly, and monthly.

NOTE

- In the following cases, you must update the network information for each appliance in the **LG ThinQ** application under **Device Cards** ⟶ **Settings** ⟶ **Change Network**.
  - wireless router is changed
  - wireless router password is changed
  - Internet service provider is changed
- To disconnect the appliance from the **Wi-Fi** network, delete the appliance from the list of connected products in the **LG ThinQ** application.
- The application is subject to change for appliance improvement purposes without notice to users.
- Functions may vary by model.

Installing LG ThinQ Application and Connecting an LG Appliance

Models with QR Code

Scan the QR code attached to the product using the camera or a QR code reader application on your smartphone.

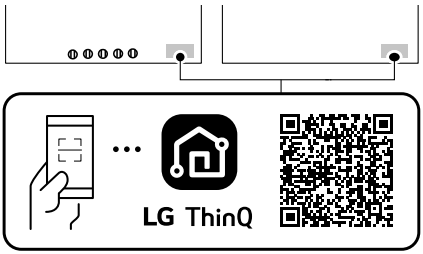

Models without QR Code

1 Search for and install the **LG ThinQ** application from the Google Play Store or Apple App Store on a smartphone.

2 Run the **LG ThinQ** application and sign in with your existing account or create an LG account to sign in.

3 Touch the add (+) button on the **LG ThinQ** application to connect your LG appliance. Follow the instructions in the application to complete the process.

NOTE

- To verify the Wi-Fi connection, check that the Wi-Fi indicator on the control panel is lit.
- The appliance supports 2.4 GHz Wi-Fi networks only. To check your network frequency, contact your Internet service provider or refer to your wireless router manual.
- **LG ThinQ** is not responsible for any network connection problems or any faults,

malfunctions, or errors caused by network connection.

- The surrounding wireless environment can make the wireless network service run slowly.
- If the distance between the appliance and the wireless router is too far, the signal strength becomes weak. It may take a long time to connect or installation may fail.
- If the appliance is having trouble connecting to the Wi-Fi network, it may be too far from the router. Purchase a Wi-Fi repeater (range extender) to improve the Wi-Fi signal strength.
- The network connection may not work properly depending on the Internet service provider.
- The Wi-Fi connection may not connect or may be interrupted because of the home network environment.
- The appliance cannot be connected due to problems with the wireless signal transmission. Unplug the appliance and wait about a minute before trying again.
- If the firewall on your wireless router is enabled, disable the firewall or add an exception to it.
- The wireless network name (SSID) should be a combination of English letters and numbers. (Do not use special characters.)
- Smartphone user interface (UI) may vary depending on the mobile operating system (OS) and the manufacturer.
- If the security protocol of the router is set to **WEP**, you may fail to set up the network. Please change it to other security protocols (**WPA2** is recommended) and connect the product again.
- To disable the Wi-Fi function, press and hold the **Wi-Fi** connection button for 3 seconds. The Wi-Fi indicator will be turned off.
- To reconnect the appliance or add another user, press and hold the **Wi-Fi** connection button for 3 seconds to temporarily turn it off. Run the **LG ThinQ** application and follow the instructions in the application to connect the appliance.

Radio Equipment Specifications

Type	Operating Frequency Range	Output Power (Max.)
Wireless LAN	2400 MHz - 2483.5 MHz	< 100 mW
Bluetooth*1		

*1 This feature is only available on some models.

Wireless function S/W version: V 1.0

For consideration of the user, this device should be installed and operated with a minimum distance of 3 cm between the device and the body.

Declaration of Conformity

CE

Hereby, LG Electronics declares that the radio equipment type Hob is in compliance with Directive 2014/53/EU. The full text of the EU declaration of conformity is available at the following internet address:

http://www.lg.com/global/support/cedoc/cedoc#

Open Source Software Notice Information

To obtain the source code that is contained in this product, under GPL, LGPL, MPL, and other open source licenses that have the obligation to disclose source code, and to access all referred license terms, copyright notices and other relevant documents, please visit https://opensource.lge.com.

LG Electronics will also provide open source code to you on CD-ROM for a charge covering the cost of performing such distribution (such as the cost of media, shipping, and handling) upon email request to opensource@lge.com.

This offer is valid to anyone in receipt of this information for a period of three years after our last shipment of this product.

MAINTENANCE

Care and Cleaning

Cleaning the Appliance

⚠ CAUTION

- A steam cleaner is not to be used.

Everyday Soiling on Glass (Fingerprints, Marks, Stains Left by Food or Non-sugary Spillovers on the Glass)

1 Switch the power to the hob off.

2 Apply a hob cleaner while the glass is still warm (but not hot!).

3 Rinse and wipe dry with a clean cloth or paper towel.

NOTE

- When the power to the hob is switched off, there will be no 'hot surface' indication but the cooking zone may still be hot! Take extreme care.
- Heavy-duty scourers, some nylon scourers and harsh/abrasive cleaning agents may scratch the glass. Always read the label to check if your cleaner or scourer is suitable.
- Never leave cleaning residue on the hob: the glass may become stained.

Boilovers, Melts, and Hot Sugary Spills on the Glass

Remove these immediately with a fish slice, palette knife or razor blade scraper suitable for hobs, but beware of hot cooking zone surfaces:

1 Switch the power to the hob off at the mechanical isolation switch.

2 Hold the blade or utensil at a 30° angle and slowly scrape the soiling or spill to a cool area of the hob. Using the blade incorrectly or improperly can scratch the hob's surface.

3 Clean the soiling or spill up with a dish cloth or paper towel.

4 Follow steps 2 to 3 for ‘Everyday Soiling on Glass’ above.

NOTE

- Remove stains left by melts and sugary food or spillovers as soon as possible. If left to cool on the glass, they may be difficult to remove or even permanently damage the glass surface.
- Cut hazard: when the safety cover of a cleaning blade is retracted, the blade in a scraper is razor-sharp. Use with extreme care and always store safely and out of reach of children.

Spillovers on the Control Panel

1 Switch the power to the hob off.

2 Soak up the spill.

3 Wipe the control panel area with a clean damp sponge or cloth.

4 Wipe the area completely dry with a paper towel.

NOTE

- The hob may beep and turn itself off, and the control panel may not function while there is liquid on them. Make sure that you wipe the

control panel area dry before turning the hob back on.

TROUBLESHOOTING

Before Calling for Service

Repairs should be performed by a licensed technician only. Improper repair may result in considerable danger to you and others. However, some minor problems can be resolved as in the table below:

If a problem is not solved, please contact an LG Electronics Customer Information Centre.

Parts and Features

Symptoms	Possible Cause & Solution
The induction hob cannot be turned on.	**No power** • Make sure the induction hob is connected to the power supply and that it is switched on. Check whether there is a power outage in your home or area. If you've checked everything and the problem persists, call a qualified technician.
The control panel is unresponsive.	**The buttons are locked.** • Unlock the buttons. See section 'Locking the Buttons' for instructions.
The control panel is difficult to operate.	**There may be a slight film of water over the buttons or you may be using the tip of your finger when touching the buttons.** • Make sure the control panel area is dry and use the ball of your finger when touching the buttons.
The glass is becoming scratched and marked.	**Rough-edged cookware** • Use cookware with flat and smooth bases. See 'Choosing the Right Cookware'.
	Unsuitable, abrasive scourer or cleaning products being used. • See 'MAINTENANCE'.
Some cookware make crackling or clicking noises.	**This may be caused by the construction of your cookware (layers of different metals vibrating differently).** • This is normal for cookware and does not indicate a fault.
The induction hob makes a low humming noise when used on a high power setting.	**This is caused by the technology of induction cooking.** • This is normal, but the noise should quieten down or disappear completely when you decrease the power setting.
Fan noise coming from the induction hob.	**A cooling fan built into your induction hob has come on to prevent the electronics from overheating. It may continue to run even after you've turned the induction hob off.** • This is normal and needs no action. Do not switch the power to the induction hob off at the wall while the fan is running.
Cookware do not become hot and error codes appear in the display.	**The induction hob cannot detect the cookware because it is not suitable for induction cooking.** • Use cookware suitable for induction cooking. See section 'Choosing the Right Cookware'.

Symptoms	Possible Cause & Solution
Cookware do not become hot and "u" appears in the display.	**The induction hob cannot detect the cookware because it is too small for the cooking zone or not properly centred on it.** • Centre the cookware and make sure that its base matches the size of the cooking zone.
The induction hob or a cooking zone has turned itself off unexpectedly, a tone sounds and an error code is displayed (typically alternating with one or two digits in the cooking timer display).	**Technical fault** • Please note down the error letters and numbers, switch the power to the induction hob off at the wall, and contact a qualified technician.
The LED does not come on when unit is plugged in.	**No power supplied.** • Check to see if plug is secured tightly in outlet and that outlet is working.
The cooking mode indicator comes on, but heating does not start.	**High temperature of the hob.** • Ambient temperature may be too high. Air Intake or air vent may be blocked.
	There is something wrong with the fan. • Check whether the fan runs smoothly.
Heating stops suddenly during operation and the display flashes “u”.	**Cookware type is wrong.** **Cookware diameter is too small.** • Use a suitable cookware. (refer to the instruction manual.)
	Cooker has overheated. • Unit is overheated. Wait for temperature to return to normal. Press the **ON/OFF** button to restart unit.
The LED on the display is blinking and not working. **The touch PCB Button is not working.**	**This is a temporary power failure.** • Cut off the power through the circuit breaker. After a while, reconnect the power. If the problem persists, call for service.

Error Codes (Auto-Recovery)

Symptoms	Possible Cause & Solution
C1	**High temperature of ceramic plate sensor** • This is normal. Problems can be resolved as follows. • Wait for the temperature of the ceramic plate return to normal. Press the **ON/OFF** button to restart unit. Check whether the fan runs smoothly; if not, call for service.
C2	**High temperature of IGBT. (1#)** • This is normal. Problems can be resolved as follows. • Wait for the temperature of the IGBT return to normal. Press the **ON/OFF** button to restart unit. Check whether the fan runs smoothly; if not, call for service.
EL	**Supply voltage is below the rated voltage.** • This is normal. Problems can be resolved as follows. • Wait for the temperature of the ceramic plate return to normal. Press the **ON/OFF** button to restart unit. Please inspect whether power supply is normal. Power on after the power supply is normal.
EH	**Supply voltage is above the rated voltage.** • This is normal. Problems can be resolved as follows. • Please inspect whether power supply is normal. Power on after the power supply is normal. Press the **ON/OFF** button to restart unit.
EF	**All cooking zones will switch themselves off if liquid boils over or something (pan or pot) is on the control panel.** • This is normal. Problems can be resolved as follows. • The automatic shutoff will also be activated if you place a damp cloth on the control panel. In both of these instances, the appliance will need to be switched on again using the **ON/OFF** button after the liquid or the cloth has been removed.

Error Codes (No Auto-Recovery)

Symptoms	Possible Cause & Solution
E1	**Ceramic plate temperature sensor failure (open circuit)** • Call for service.
E2	**Ceramic plate temperature sensor failure (short circuit)** • Call for service.
E7	**Ceramic plate temperature sensor failure (invalid)** • Call for service.

Symptoms	Possible Cause & Solution
E3	**Temperature sensor of the IGBT failure (open circuit)** • Call for service.
E4	**Temperature sensor of the IGBT failure (short circuit)** • Call for service.
F5	**The DC Motor fails to operate because of problems with the PCB or wiring, or electrical disturbance on the motor blade. (Big fan error)** • Call for service.
F6	**The DC Motor fails to operate because of problems with the PCB or wiring, or electrical disturbance on the motor blade. (Small fan error)** • Call for service.
EU	**The connection between the display board and the main board is fail.** • Call for service.

Wi-Fi

Symptoms	Possible Cause & Solution
Your home appliance and smartphone are not connected to the Wi-Fi network.	**The password for the Wi-Fi that you are trying to connect to is incorrect.** • Find the Wi-Fi network connected to your smartphone and remove it, then register your appliance on **LG ThinQ**.
	Mobile data for your smartphone is turned on. • Turn off the **Mobile data** of your smartphone and register the appliance using the Wi-Fi network.
	The wireless network name (SSID) is set incorrectly. • The wireless network name (SSID) should be a combination of English letters and numbers. (Do not use special characters.)
	The router frequency is not 2.4 GHz. • Only a 2.4 GHz router frequency is supported. Set the wireless router to 2.4 GHz and connect the appliance to the wireless router. To check the router frequency, check with your Internet service provider or the router manufacturer.
	The distance between the appliance and the router is too far. • If the distance between the appliance and the router is too far, the signal may be weak and the connection may not be configured correctly. Move the location of the router so that it is closer to the appliance.

APPENDIX

Product Fiche

Product Fiche

Product Fiche_COMMISSION DELEGATED REGULATION (EU) No 66/2014, Applicable Standard EN 60350-2

Trademark	LG
Model identifier	CI5Z2420BN
Type of hob	Built-in hob
Heating technology	induction cooking zones
Number of cooking zones and/ or areas	3 zones
For circular cooking zones or area: diameter of useful surface area per electric heated cooking zone, rounded to the nearest 5 mm For non-circular cooking zones or areas: length and width of useful surface area per electric heated cooking zone or area, rounded to the nearest 5 mm	Front Left 15.0 cm Rear Left 21.0 cm Right 28.0 cm
Energy consumption per cooking zone or area calculated per kg ($EC_{electric\ cooking}$)	Front Left 195.0 Wh/kg Rear Left 195.0 Wh/kg Right 195.0 Wh/kg
Energy consumption for the hob calculated per kg ($EC_{electric\ hob}$)	195.0 Wh/kg

COMMISSION REGULATION (EU) 2023/826 Applicable Standard EN 50564

Standby power consumption	0.5 W
The period of time after which the power management function, or a similar function, switches the equipment automatically into standby and/or off mode and/or the condition providing networked standby	10 min.

Memo

LG