LG

MFL72140026250 3REV02

43QNED81A*
50QNED81A* 50QNED86A*
55QNED81A* 55QNED86A*
65QNED81A* 65QNED86A*
75QNED81A* 75QNED86A* 65QNED87A*
86QNED81A* 86QNED86A* 75QNED87A*





www.lg.com

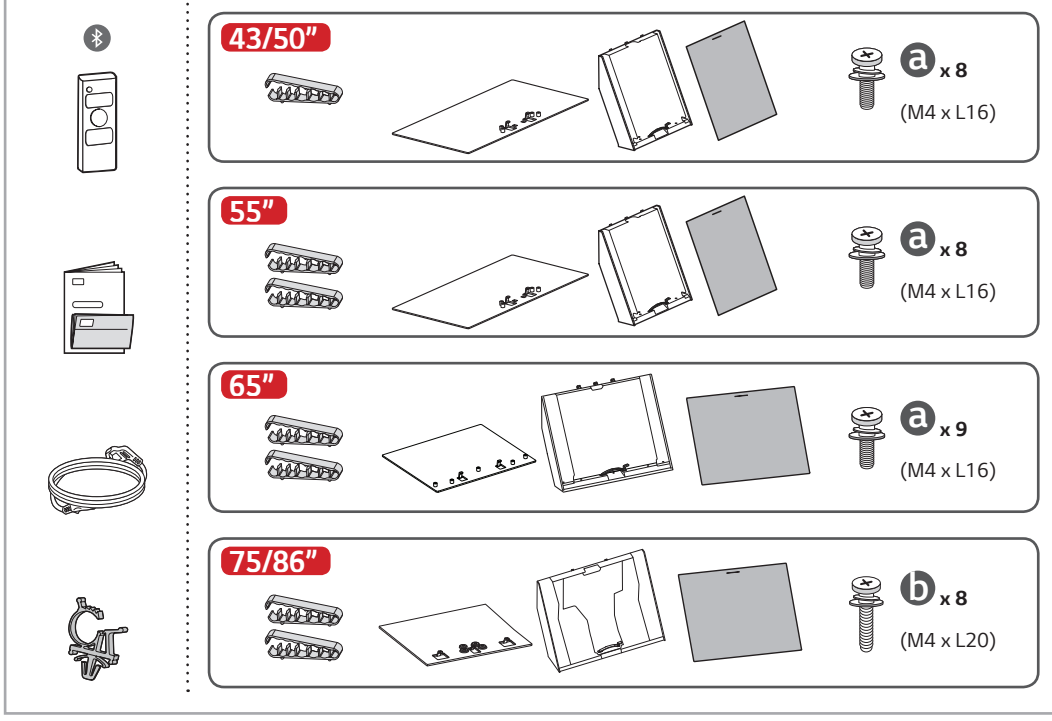

43/50/55"

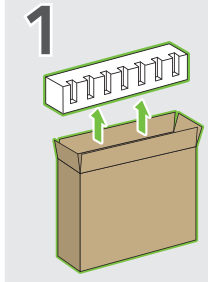

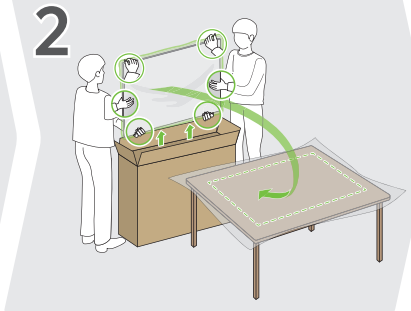

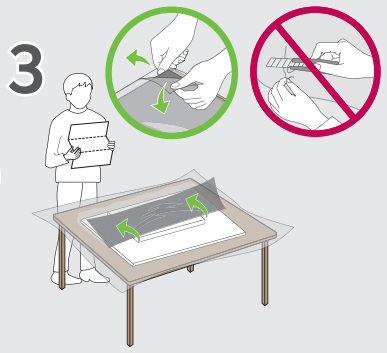

65/75"

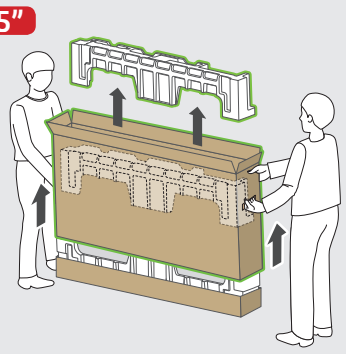

86"

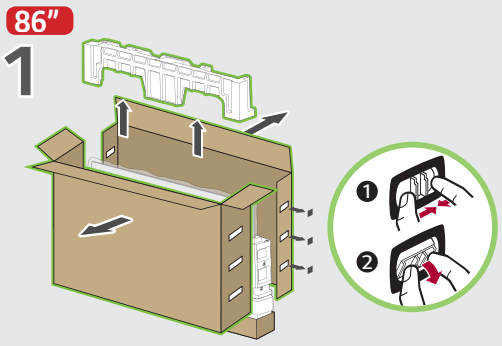

65/75/86"

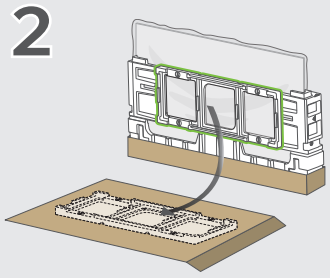

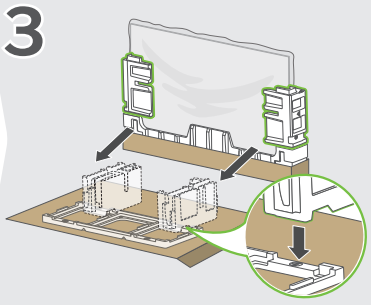

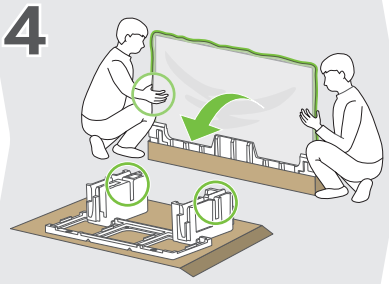

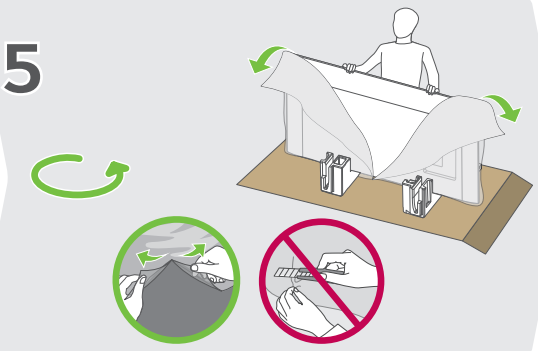

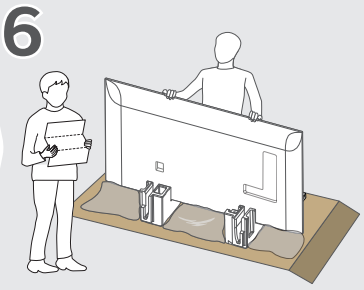

1

43/50/55"

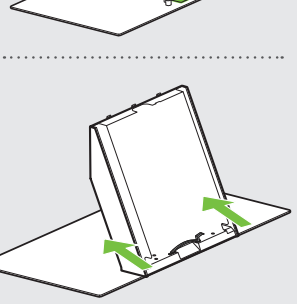

65"

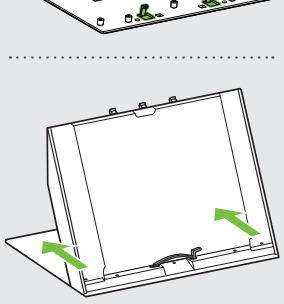

75/86"

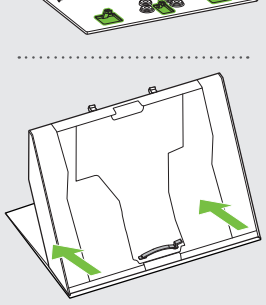

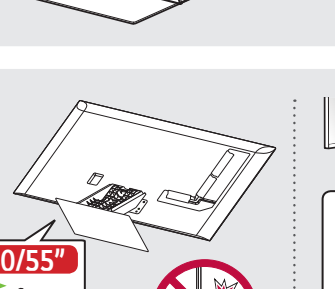

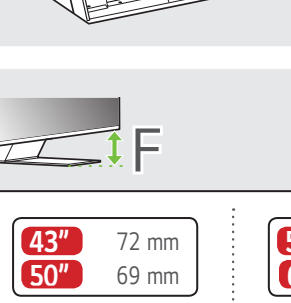

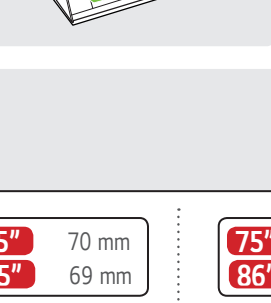

2

43/50/55"
a x 4

65"
a x 5

75/86"
b x 4

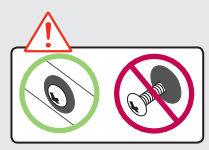

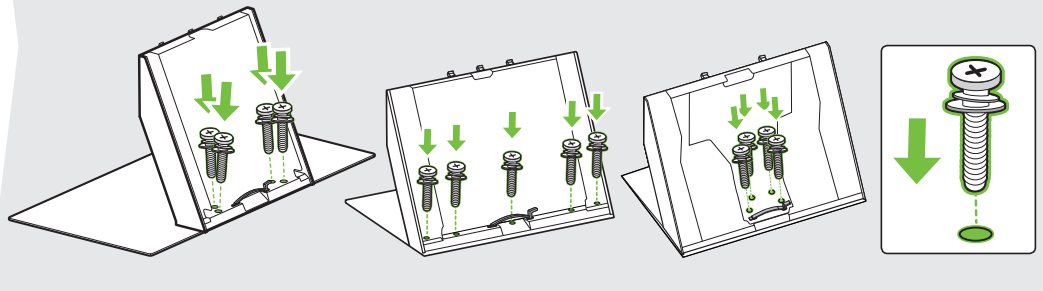

3

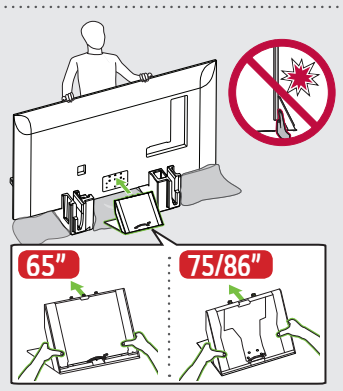

F

43" 50"	72 mm 69 mm
55" 65"	70 mm 69 mm
75" 86"	77 mm 82 mm

F'

55" 65"	30 mm 29 mm
75" 86"	29 mm 34 mm

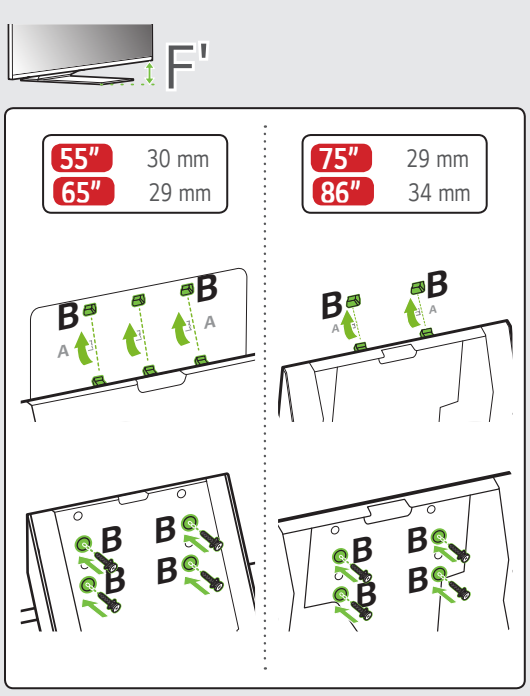

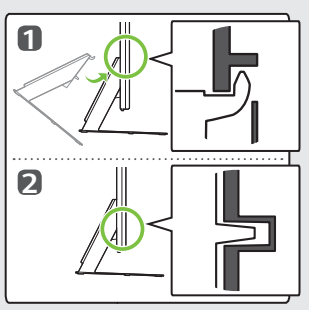

43/50/55/65"
a x 4

75/86"
b x 4

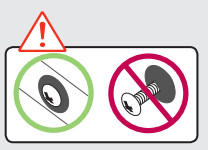

4

43/50/55”

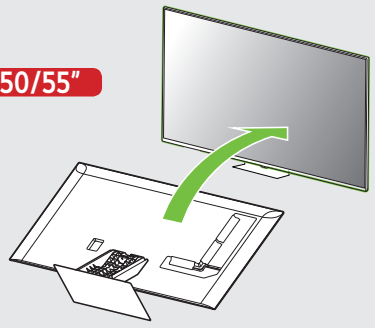

65/75/86”

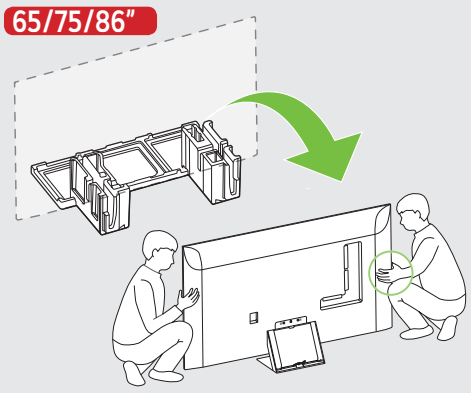

5

43/50”

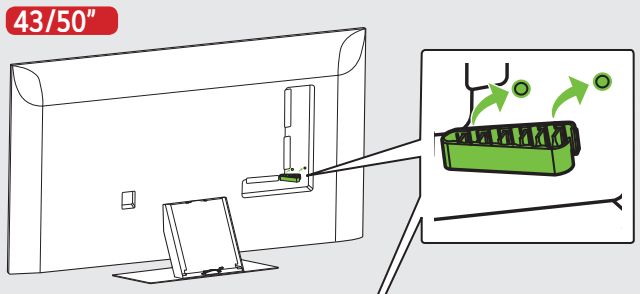

55/65/75/86”

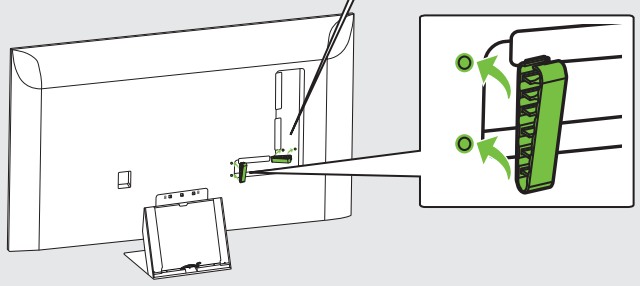

6

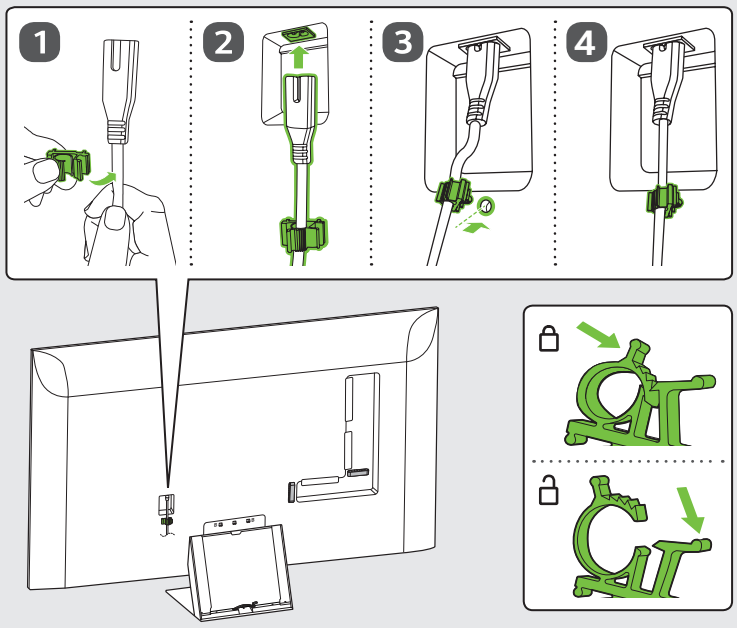

7

43/50/55”

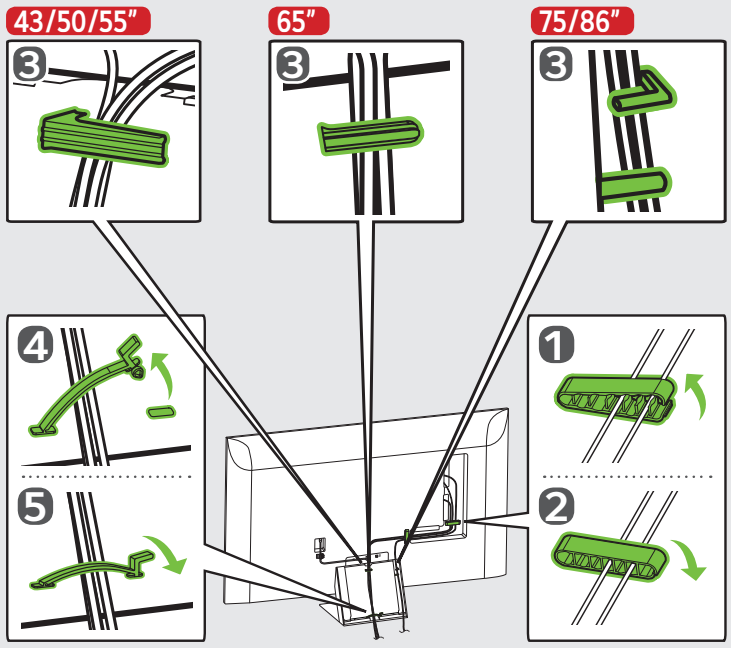

65”

75/86”

8

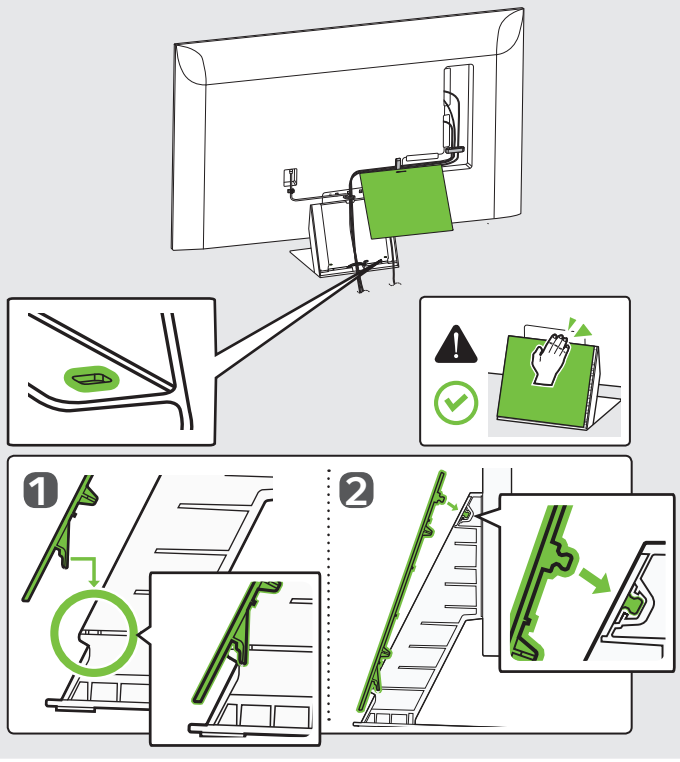

9

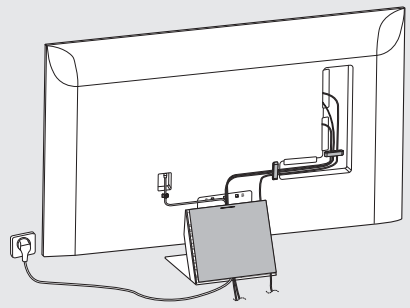

43/50/55/65/75/86”

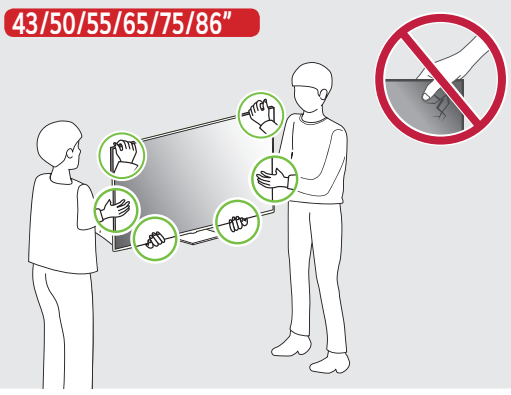

Connectivity

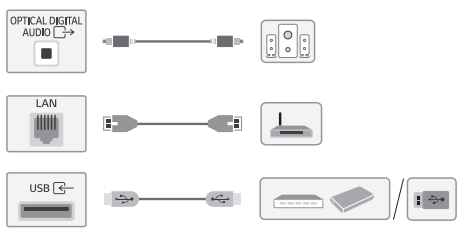

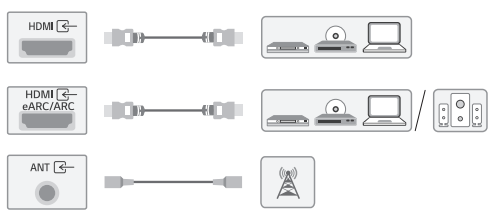

Battery



Dimensions

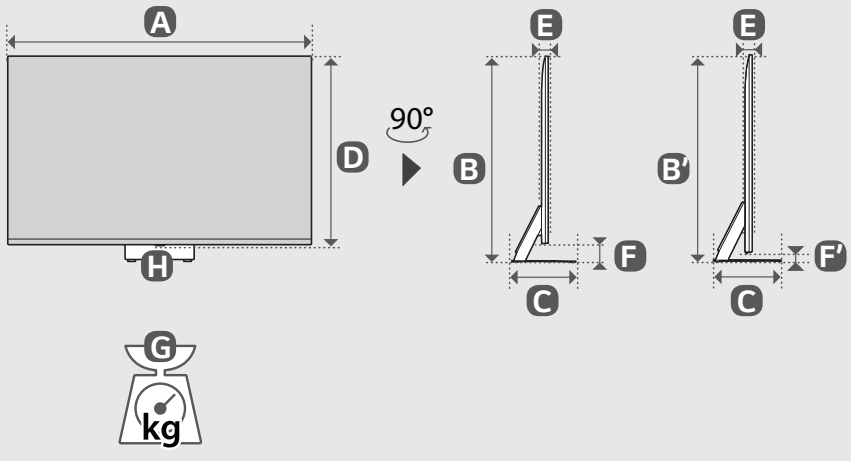

	A	B/B'	C	D	E	F/F'	G	G-H
	(mm)						(kg)	
43QNED81A*	968	637 / -	260	565	29.7	72 / -	13.1	9.3
50QNED81A* 50QNED86A*	1123	721 / -	260	652	29.7	69 / -	16.4	12.6
55QNED81A* 55QNED86A*	1236	786 / 746	260	716	29.7	70 / 30	19.3	15.5
65QNED81A* 65QNED86A* 65QNED87A*	1456	909 / 869	285	840	29.7	69 / 29	26.3	22.5
75QNED81A* 75QNED86A* 75QNED87A*	1677	1042 / 994	370	965	30.9	77 / 29	41.5	33.3
86QNED81A* 86QNED86A*	1928	1190 / 1142	370	1108	30.9	82 / 34	58.2	50.0

Wall mount

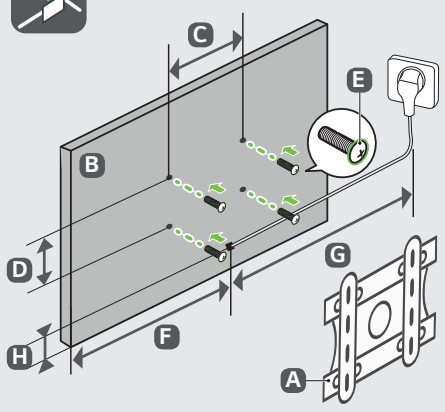

A	B	C x D (mm)	E	F (mm)	G (m)	H (mm)
LSW240B MSW240	43QNED81A*	200 x 200	M6	287	≧ 1.5	190
	50QNED81A* 50QNED86A*			364		221
WB24GCB MSW240	55QNED81A* 55QNED86A*	300 x 300		371		277
WB24GCB	65QNED81A* 65QNED86A* 65QNED87A*			481		295
WB24GCB	75QNED81A* 75QNED86A* 75QNED87A*	400 x 300		532		341
WB24GDB	86QNED81A* 86QNED86A*	600 x 400	M8	573		336

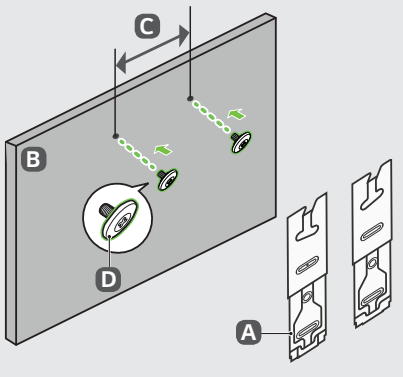

A	B		C (mm)	D
WB21LMB	43QNED81A*	50QNED81A* 50QNED86A*	200	M6
WB21LMB	55QNED81A* 55QNED86A*	65QNED81A* 65QNED86A* 65QNED87A*	300	M6

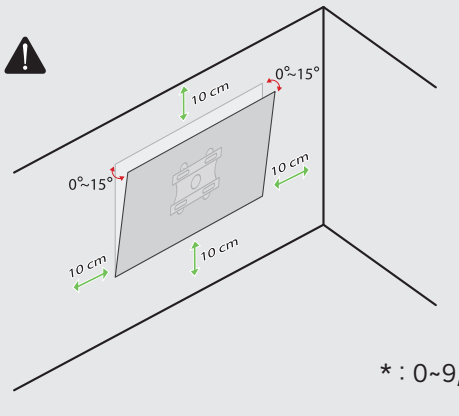

* : 0~9, A~Z