LG
Life's Good

LED LCD COMPUTER MONITOR (LED Computer Monitor)

29WP60G
34WP65G

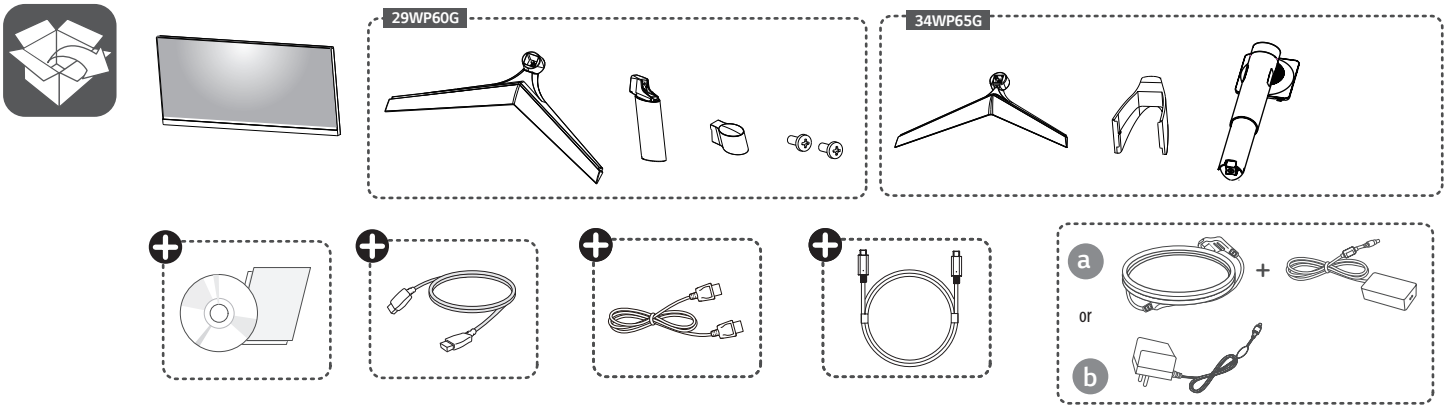

Depending on country

It is recommended that use the supplied components.

www.lg.com

You can download manuals from the LGE website.
OWNER'S MANUAL AND REGULATORY INFO. are available at *https://www.lg.com/au/support/manuals*.
PLEASE READ SAFETY INFORMATION BEFORE INSTALLATION AND USE. SCAN QR CODE TO ACCESS.

MBM66185425
(2101-REV00)

29WP60G

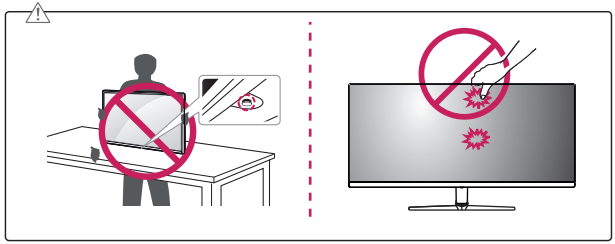

1

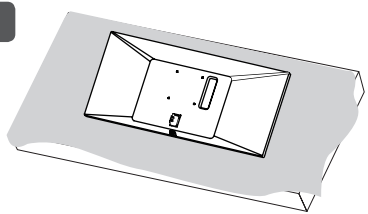

2

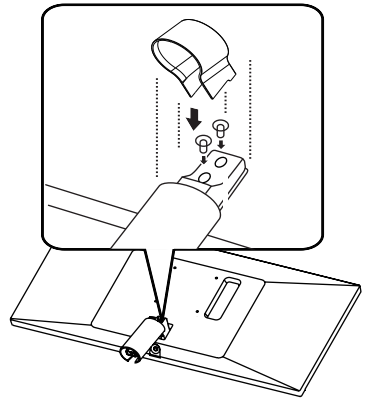

3

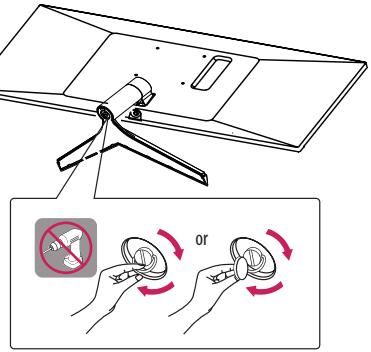

4

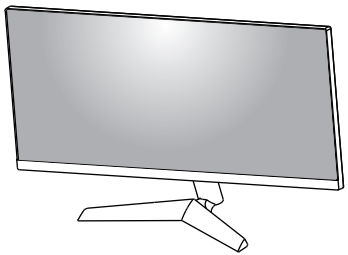

34WP65G

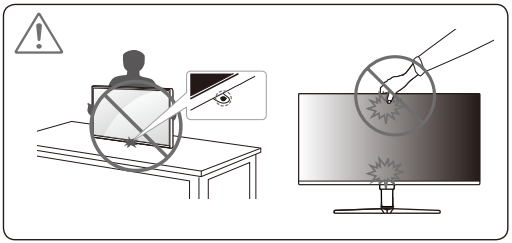

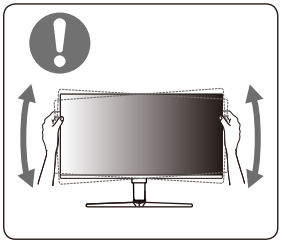

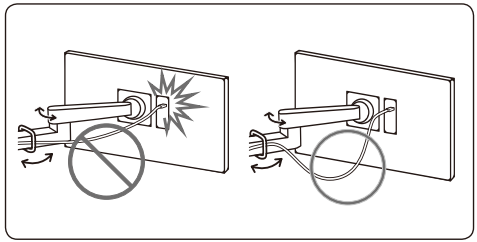

1

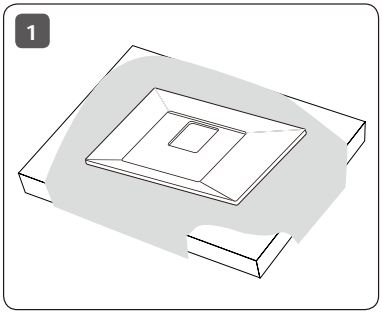

2

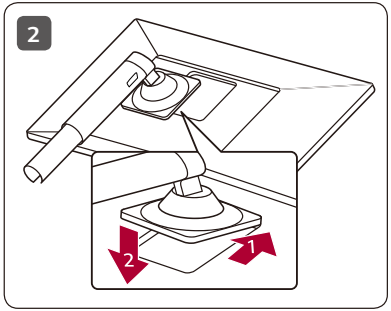

3

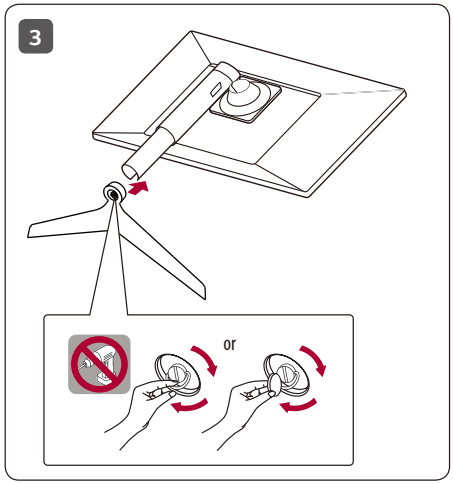

4

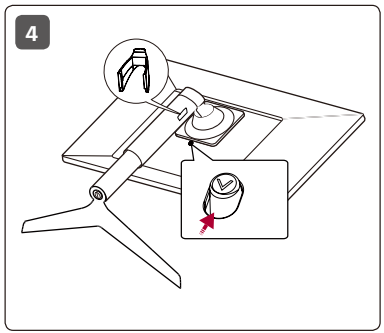

5

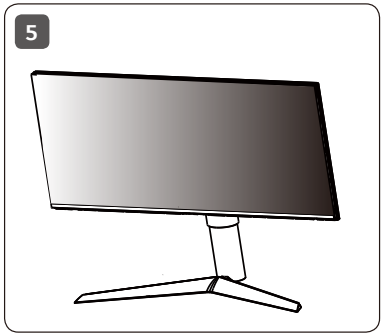

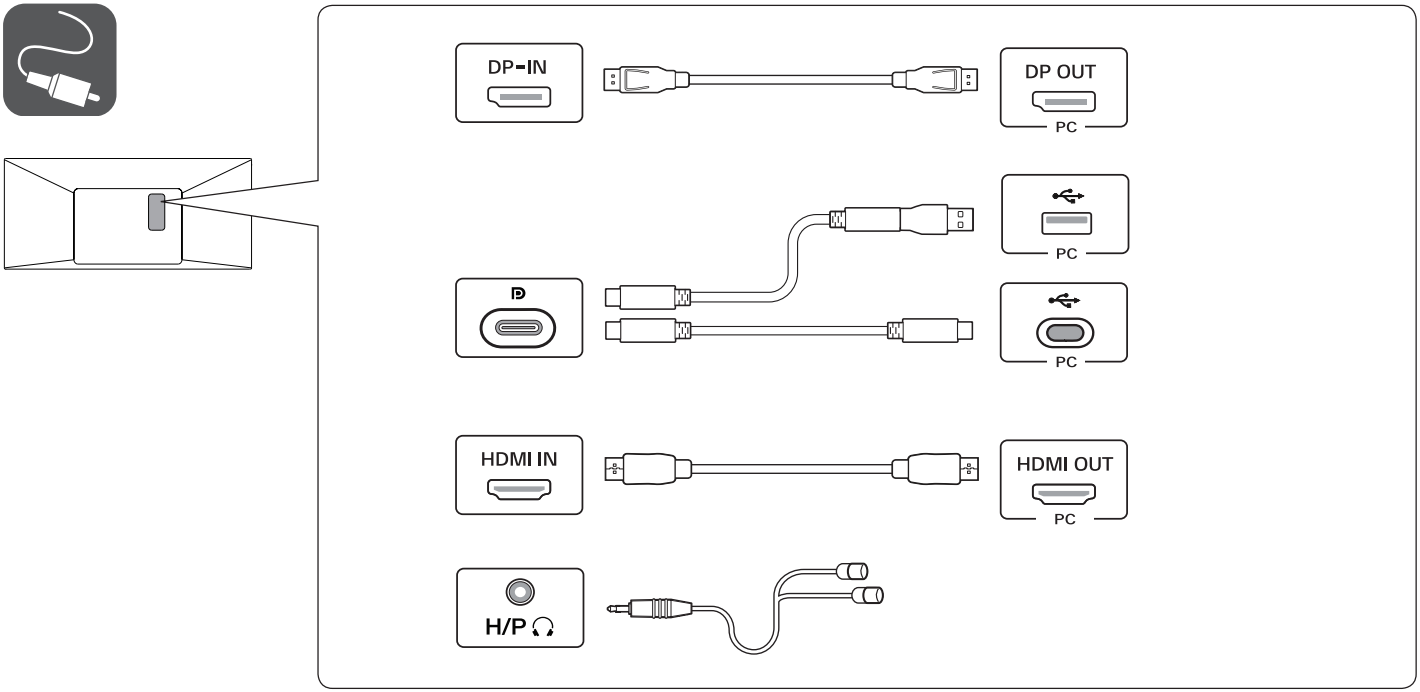

- Using a DVI to HDMI / DP (DisplayPort) to HDMI cable may cause compatibility issues.
- Make sure to use the supplied cable. Otherwise, this may cause the device to malfunction.

29WP60G

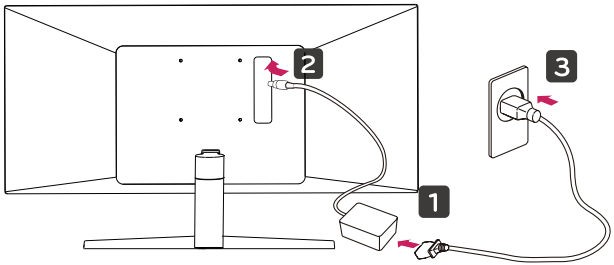

or

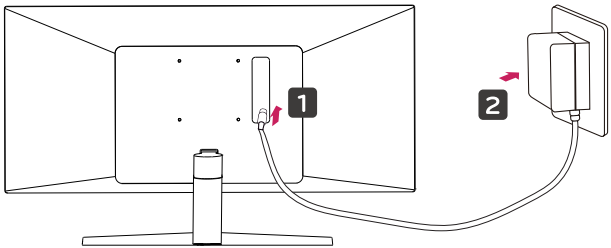

34WP65G

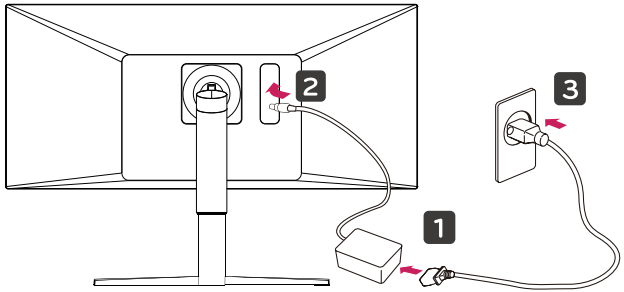

or

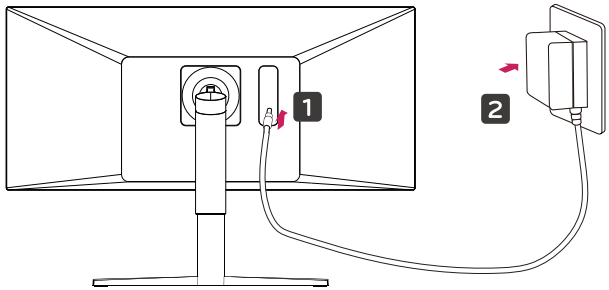

29WP60G

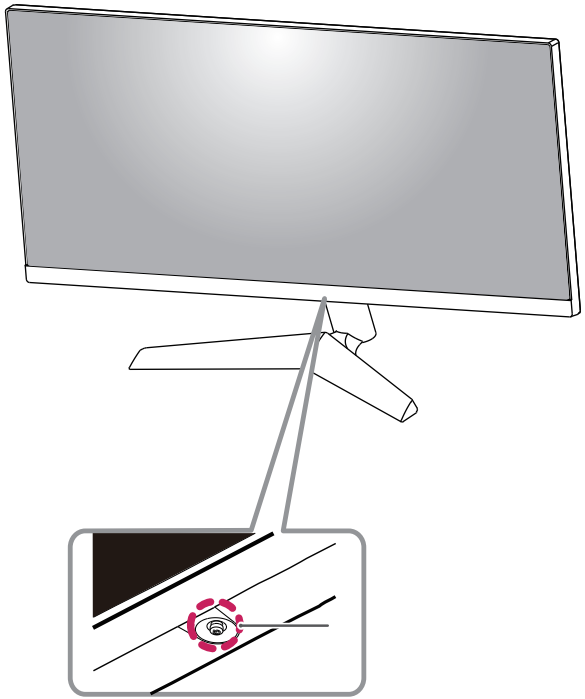

34WP65G

