OWNER'S MANUAL

LG Digital Signage

(MONITOR SIGNAGE)

Please read this manual carefully before operating your set and retain it for future reference.

55VX1D

www.lg.com
P/No: MFL70501803 (2001-REV01)
Copyright © 2018 LG Electronics Inc. All Rights Reserved.

TABLE OF CONTENTS

SAFETY PRECAUTIONS 3

- Precautions In Installing the Product.....3
- Precautions to the AC Adapter and Electrical Power.....5
- Precautions In Moving the Product.....7
- Precautions In Using the Product.....8
- Mounting on a Wall.....9

LICENSES..... 10

ASSEMBLY AND PREPARATION 11

- Parts and Buttons.....12
- Portrait Layout.....13
- Remove L-brackets before Installation.....13
- STORAGE METHOD FOR PANEL PROTECTION...14
- Installing on a Wall.....16
- EXTERNAL EQUIPMENT SETUP.....17
- Tiling Displays.....17

REMOTE CONTROL..... 19

MAKING CONNECTIONS..... 21

- Connecting to a PC.....21
- External Device Connection.....21
- Using the Input List.....21
- Daisy Chain Monitors.....23

TROUBLESHOOTING..... 24

PRODUCT SPECIFICATIONS..... 27

TO SEE THE WEB MANUALS (SOFTWARE USER GUIDE / INSTALLATION MANUAL) 30

WARNING - This equipment is compliant with Class A of CISPR 32. In a residential environment this equipment may cause radio interference.

SAFETY PRECAUTIONS

Please read these safety precautions carefully before using the product.

⚠ WARNING

If you ignore the warning message, you may be seriously injured or there is a possibility of accident or death.

⚠ CAUTION

If you ignore the caution message, you may be slightly injured or the product may be damaged.

⚠ WARNING

- Indoor Use Only.

Precautions In Installing the Product

⚠ WARNING

- Keep away from heat sources like electrical heaters.
  - Electrical shock, fire, malfunction, or deformation may occur.
- Keep the packing anti-moisture material or vinyl packing out of the reach of children.
  - Anti-moisture material is harmful if swallowed. If swallowed by mistake, force the patient to vomit and visit the nearest hospital. Additionally, vinyl packing can cause suffocation. Keep it out of the reach of children.
- Do not put heavy objects on the product or sit upon it.
  - If the product collapses or is dropped, you may be injured. Children must pay particular attention.
- Do not leave the power or signal cable unattended on the pathway.
  - The passerby can trip or fall, which can cause electrical shock, fire, product breakdown, or injury.
- Install the product in a neat and dry place.
  - Dust or moisture can cause electrical shock, fire or product damage.
- If you can smell smoke or other odors or hear a strange sound unplug the power cord and contact the service center.
  - If you continue to use without taking proper measures, electrical shock or fire can occur.
- If you dropped the product or the case is broken, turn off the product and unplug the power cord.
  - If you continue to use without taking proper measures, electrical shock or fire can occur. Contact the service center.

- Do not drop an object on or apply impact to the product. Do not throw any toys or objects on the product screen.
  - It can cause injury to human, problem to product and damage the display.
- Do not let the product fall or drop when connecting it with an external device.
  - This may cause injury and/or damage to the product.
- When connecting it to a game device, keep a distance of four times the diagonal measurement of the screen from the device.
  - If the product falls because of the short cable, this may cause injury and/or damage to the product.
- Leaving a fixed image on the screen for a long time may cause damage to the screen and cause image burn-in. To use the product for a long period of time, use a screen saver on the PC or utilize the residual image prevention function on the product, and when the product is not used, turn off the power. Burn-in and related problems are not covered by the warranty on this product.
- Do NOT install this product on a wall where there is high risk of exposure to oil fumes or mist.
  - This may damage product and cause it to fall.

⚠ CAUTION

- Make sure the product ventilation holes are not blocked. Install the product in a suitably wide place (more than 100 mm from the wall).
  - If you install the product too close to the wall, it may be deformed or fire can break out due to internal heat.
- Do not block the ventilation hole of the product by a tablecloth or curtain.
  - The product can be deformed or fire can break out due to overheating inside the product.
- Install the product on a flat and stable place that has no risk of dropping the product.
  - If the product is dropped, you may be injured or the product may be broken.
- Install the product where no EMI occurs.
- Keep the product away from direct sunlight.
  - The product can be damaged.
- If you install the product in a place that does not meet the recommended conditions, this may cause serious damage to the product's picture quality, life cycle, and appearance. Please check with LG or a qualified installer before installing. This caution applies to a place where there is an abundance of fine dust or oil mist, chemical substances are used, the temperature is very high or low, the humidity is very high, or the product is likely to remain turned on for a long period of time (airport and train station), failure to do so will invalidate the warranty.
- Do not install the product in an area with poor ventilation (e.g.on a bookshelf, in a closet) or outside and avoid placing on cushions or carpets.
- In addition, do not install it where there are heating objects such as lighting equipment.

Precautions to the AC Adapter and Electrical Power

⚠ WARNING

- If water or any foreign substance goes inside the product (TV, monitor, power cord, or AC adapter), disconnect the power cord immediately and contact the service center.
  - Otherwise, this may cause a fire or electric shock due to damage to the product.
- Do not touch the power plug or AC adapter with wet hands. If the pins of the plug are wet or dusty, wipe and dry them before use.
  - Otherwise, this may cause a fire or electric shock.
- Make sure to completely insert the power cord into the AC adapter.
  - If loosely connected, the poor connection may cause a fire or electric shock.
- Be sure to use power cords and AC adapters provided or approved by LG Electronics, Inc.
  - The use of non-approved products may cause a fire or electric shock.
- When unplugging the power cord, always pull it by the plug. Do not bend the power cord with excessive force.
  - The power line can be damaged, which may cause electric shock or fire.
- Be careful not to step or place heavy objects (electronic appliances, clothing, etc.) on the power cord or AC adapter. Be careful not to damage the power cord or AC adapter with sharp objects.
  - Damaged power cords may cause a fire or electric shock.
- Never disassemble, repair or modify the power cord or AC adapter.
  - This may cause a fire or electric shock.
- Make sure to connect the power cable to the grounded current.
  - You may be electrocuted or injured.
- Use the rated voltage only.
  - The product can be damaged, or you may be electrocuted.
- In the presence of thunder and lightning, never touch the power cord and signal cable because it can be very dangerous.
  - It can cause electric shock.
- Do not connect several extension cords, electrical appliances, or electrical heaters to a single outlet. Use a power strip with a grounding terminal designed for exclusive use with the computer.
  - A fire can break out due to overheating.
- Do not touch the power plug with wet hands. Additionally, if the cord pin is wet or covered with dust, dry the power plug completely or wipe dust off.
  - You may be electrocuted due to excess moisture.

- If you don't intend to use the product for a long time, unplug the power cable from the product.
  - Covering dust can cause a fire, or insulation deterioration can cause electric leakage, electric shock or fire.
- Fix the power cable completely.
  - If the power cable is not fixed completely, a fire can break out.
- Do not insert a conductor (like a metal chopstick) into one end of the power cable while the other end is connected to the input terminal on the wall. Additionally, do not touch the power cable right after plugging into the wall input terminal.
  - You may be electrocuted.
- The appliance coupler is used as the disconnect device.
- Please make sure the device is installed near the wall outlet to which it is connected and that the outlet is easily accessible.
- As long as this unit is connected to the AC wall outlet, it is not disconnected from the AC power source even if the unit is turned off.

⚠ CAUTION

- Be sure to keep the outlet, AC adapter, and pins of the power plug clean from dust and etc.
  - This may cause a fire.
- Do not unplug the power cord while the product is in use.
  - Electrical shock can damage the product.
- Use only the power cord supplied with the unit. If you use another power cord, make sure that it is certified by the applicable national standards when not provided by the supplier. If the power cable is faulty in any way, please contact the manufacturer or the nearest authorized repair service provider for a replacement.

Precautions In Moving the Product

WARNING

- Make sure to turn off the product.
  - You may be electrocuted or the product can be damaged.
- Make sure to remove all cables before moving the product.
  - You may be electrocuted or the product can be damaged.
- Make sure the panel faces forward and hold it with both hands to move. If you drop the product, the damaged product can cause electric shock or fire. Contact an authorized the service center for repair.
- Make sure the product is turned off, unplugged, and all cables have been removed. It may take 2 or more people to carry larger apparatus. Do not press against or put stress on the front panel of the apparatus.

CAUTION

- Do not shock the product when moving it.
  - You may be electrocuted or the product can be damaged.
- Do not dispose the product-packing box. Use it when you move.

Precautions In Using the Product

⚠ WARNING

- Do not disassemble, repair or modify the product at your own discretion.
  - Fire or electric shock accident can occur.
  - Contact the service center for check, calibration or repair.
- When the display is to be left unattended for an extended period of time, unplug it from the wall outlet.
- Keep the product away from water.
  - Fire or electric shock accident can occur.
- Do not shock or scratch the front and sides of the screen with metallic objects.
  - Otherwise, it may cause damage to the screen.
- Avoid high temperatures and humidity.

⚠ CAUTION

- Do not put or store inflammable substances near the product.
  - There is a danger of explosion or fire due to careless handling of the inflammable substances.
- When cleaning the product, unplug the power cord and scrub gently with a soft cloth to prevent scratching. Do not clean with a wet cloth or spray water or other liquids directly onto the product. An electric shock may occur. (Do not use chemicals such as benzene, paint thinners, or alcohol.)
- Take a rest from time to time to protect your vision.
- Keep the product clean at all times.
- Take a comfortable and natural position when working with a product to relax the muscles.
- Take a regular break when working with a product for a long time.
- Do not press strongly upon the panel with a hand or sharp object such as nail, pencil, or pen, or make a scratch on it.
- Keep the proper distance from the product.
  - Your vision may be impaired if you look at the product too closely.
- Set the appropriate resolution and clock by referring to the User's Guide.
  - Your vision can be impaired.
- Use authorized detergent only when cleaning the product. (Do not use benzene, thinner, or alcohol.)
  - Product can be deformed.
- Do not expose to dripping or splashing and do not place objects filled with liquids, such as vases, cups, etc. on or over the apparatus (e.g. on shelves above the unit).
- Batteries should not be exposed to excessive heat. For example, keep away from direct sunlight, open fireplace, and electric heaters.
- Do NOT place non-rechargeable batteries in charging device.
- Using headsets (earphones) for a long time or listening loudly can cause damage to your hearing.

- Spray water onto a soft cloth 2 to 4 times, and use it to clean the front frame; wipe in one direction only. Too much moisture may cause staining.

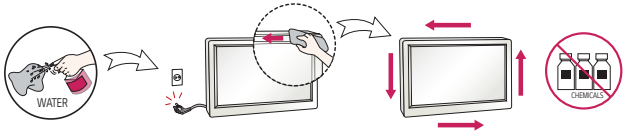

- Do not use products using high voltage around the Monitor. (e.g., a bug zapper)
  - Monitor may have malfunction as its electrical shock.

Mounting on a Wall

- Do NOT install this product by yourself as you may injure yourself or cause damage to product. Please contact service personnel authorised by manufacturer.

LICENSES

Supported licenses may differ by model. For more information of the licenses, visit *www.lg.com*.



The terms HDMI and HDMI High-Definition Multimedia Interface, and the HDMI Logo are trademarks or registered trademarks of HDMI Licensing Administrator, Inc. in the United States and other countries.

Manufactured under license from Dolby Laboratories. Dolby, Dolby Vision, Dolby Audio, Dolby Atmos, and the double-D symbol are trademarks of Dolby Laboratories.

For DTS patents, see *http://patents.dts.com*. Manufactured under license from DTS Licensing Limited. DTS, the Symbol, & DTS and the Symbol together, DTS 2.0 Channel, DTS 2.0+Digital Out, DTS-HD, and DTS Virtual:X are registered trademarks or trademarks of DTS, Inc. in the United States and/or other countries. © DTS, Inc. All Rights Reserved.



ASSEMBLY AND PREPARATION

⚠ CAUTION

- Always use genuine components to ensure safety and product performance.
- The product warranty will not cover damage or injury caused by the use of counterfeit components.

NOTE

- The accessories provided with your product may vary depending on the model or region.
- Product specifications or contents in this manual may be changed without prior notice due to upgrade of product functions.
- SuperSign Software & Manual

-Downloading from the LG Electronics website.

-Visit the LG Electronics website (*http://partner.lge.com*) and download the latest software for your model.

- The warranty will not cover any damage caused by using the product in an excessively dusty environment.

Parts and Buttons

The image may be different according to the model.

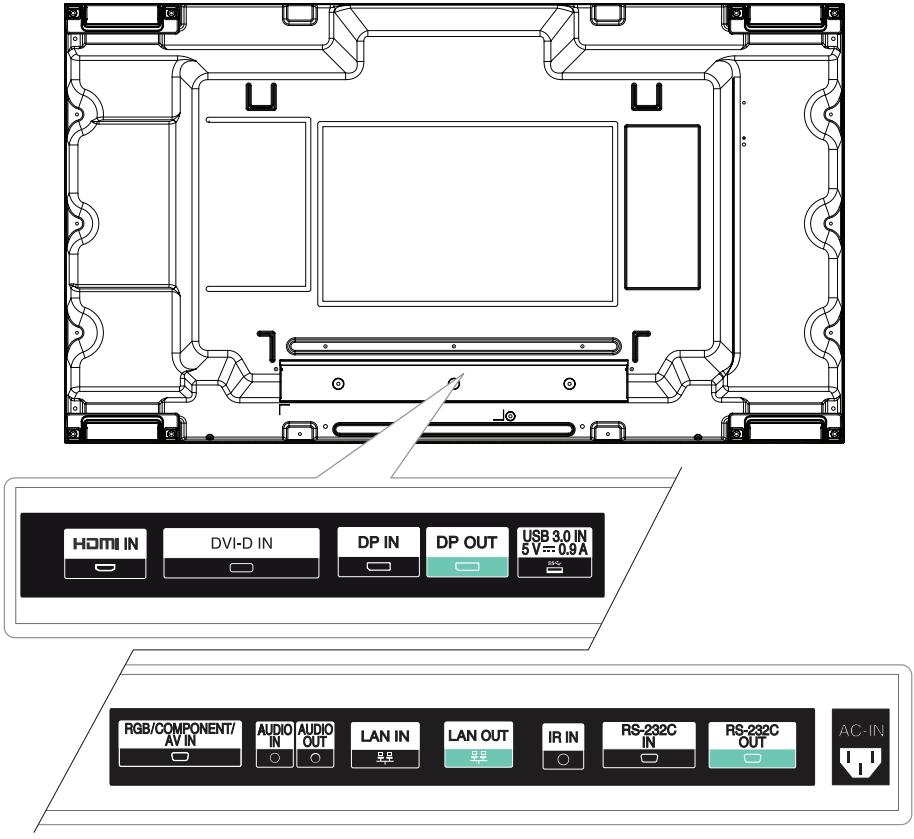

Portrait Layout

When installing in a portrait layout, rotate the monitor clockwise 90 degrees (when facing the screen).

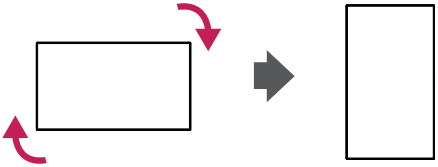

Remove L-brackets before Installation

Remove the L-brackets from each corner of the monitor before installing it.

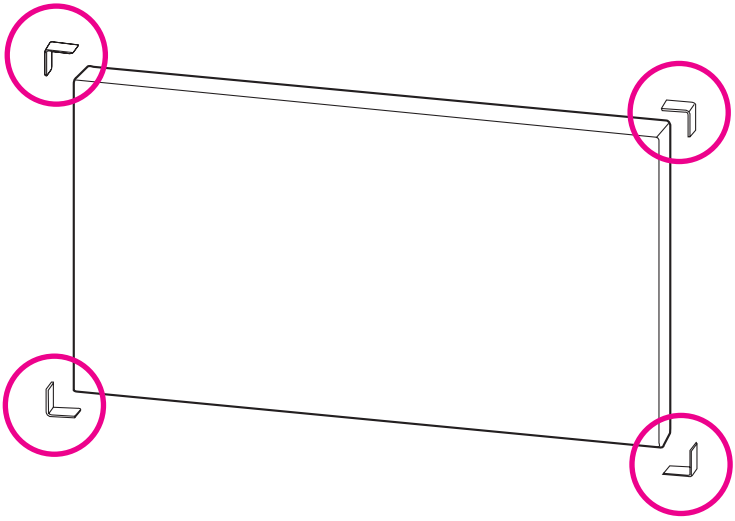

NOTE

- Keep the removed L-brackets and use them when moving the monitor later.

STORAGE METHOD FOR PANEL PROTECTION

Correct Method

1 If the product needs to be set upright, hold both sides of the product, and tilt backward carefully for. Do not let the panel to touch the floor.

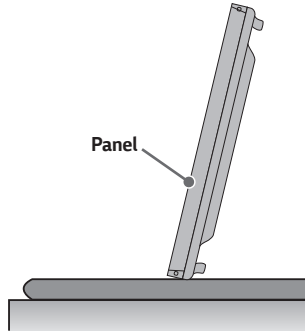

2 When laying down the product, lay a cushion on a flat floor. Put the product on it with the panel of the product facing down.

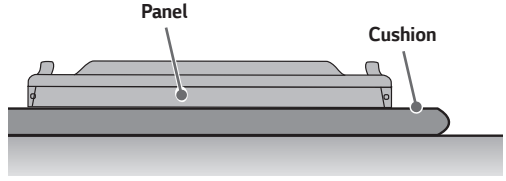

3 If there is not a cushion available, ensure the floor is clean and then lay the product down carefully with the panel facing either upward or downward. At this time, be careful for objects not to fall on the panel.

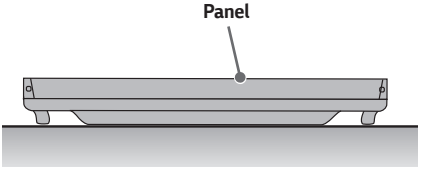

Incorrect Method

1 If the product is tilted onto the bezel, the bottom of the panel may be damaged.

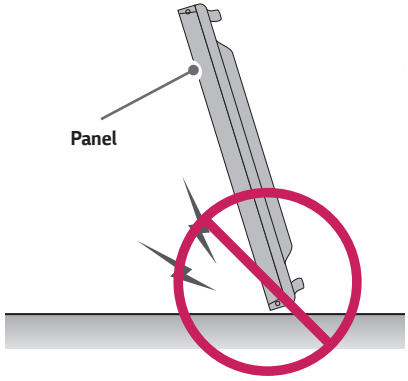

2 If the product is tilted onto the edge of the panel, the panel may be damaged.

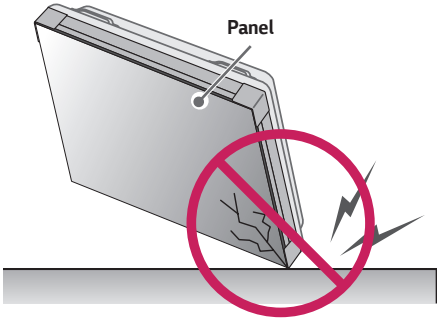

Installing on a Wall

To install the Monitor on a wall (optional), use the VESA screws provided as accessories to fasten it.

Install the monitor at least 200 mm away from the wall and leave about 100 mm of space at each side of the monitor to ensure sufficient ventilation.

Use the wall mount plate and screws that comply with the VESA standard.

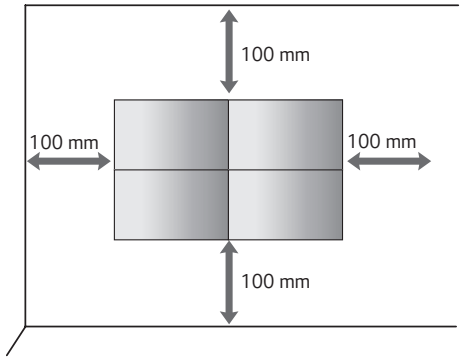

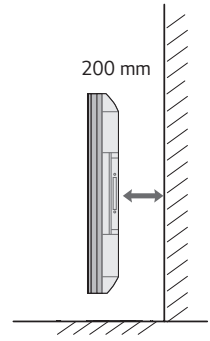

⚠ CAUTION

- Disconnect the power cord before moving or installing the monitor to avoid risk of electric shock.
- If you install the monitor on a ceiling or slanted wall, it may fall and result in injury. Use an authorized LG wall mount and contact your local dealer or qualified personnel to assist with the installation.
- Do not over tighten the screws as this may damage the monitor and void your warranty.
- Use only screws and wall mounting brackets that meet the VESA standard. Any damage or injuries caused by misuse or use of improper accessories are not covered by the warranty.
- To prevent injury, this apparatus must be securely attached to the wall in accordance with the installation instructions. (This pertains only to Australia and New Zealand.)

NOTE

- Do not install the product in a place with no ventilation (e.g., on a bookshelf or in a closet) or on a carpet or cushion. If there is no other option but to mount the product on the wall, make sure that sufficient ventilation is provided before installation.
  - Failure to do so may result in a fire due to the increase in the internal temperature.
- The illustration shows a general example of installation and may look different from the actual product.

EXTERNAL EQUIPMENT SETUP

IR RECEIVER

This allows a remote control sensor to be placed in a custom location. Then that display can control other displays via an RS-232C cable.

Tiling Displays

How to Mount the Set

Example of 2 x 2 Tiling

Using the screws for attaching the VESA wall mount, mount the set to the wall mount plate or the wall.

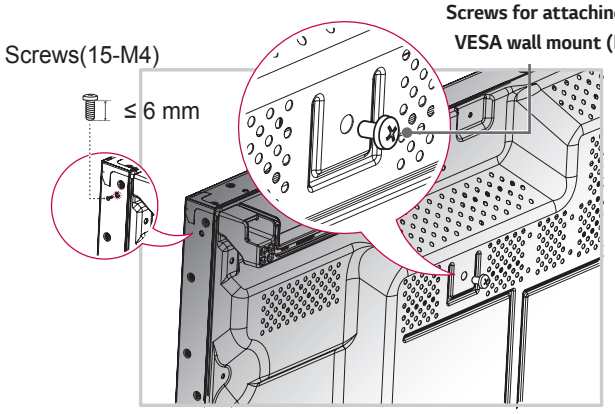

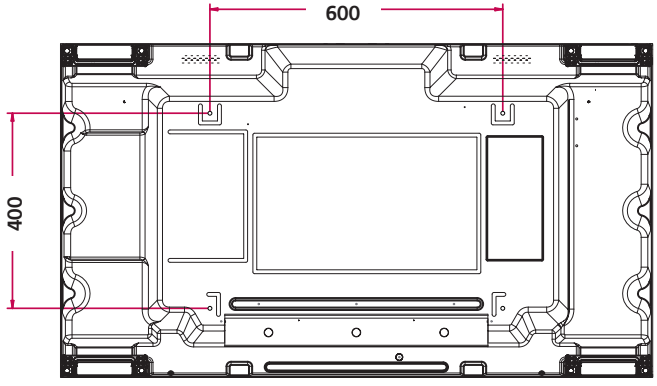

How to Join Sets

1 Join other sets using screws for fixing the VESA wall mount in the same way as above.

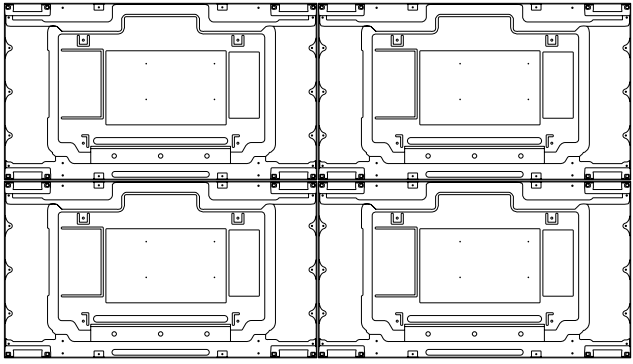

Set 4 joined to the rest of the sets (2 x 2 tiling)

2 After joining the sets, use the tiling guide to adjust the gap between the sets.

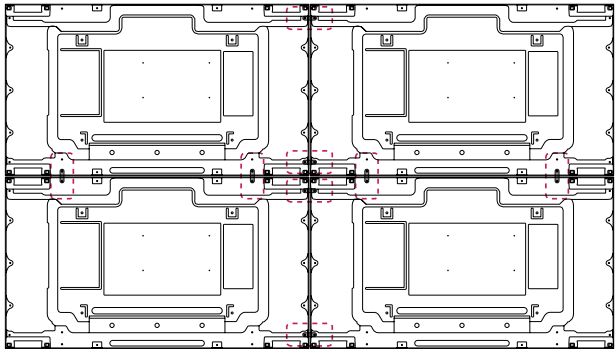

3 Now the 2 x 2 tiling is complete. You can tile in various combinations, such as 3 x 3.

NOTE

- The load applied to each set should be supported by the wall mount plate or the wall using a VESA wall mount (600 x 400).
- The load applied to each set should be supported by the wall mount plate using a VESA wall mount. (Each set must be firmly mounted to the wall mount plate or the wall.)
- You may mount the set without using the tiling guide; this does not affect the performance of the device.
- The screws are enclosed with the other components in the box, including the tiling guides.

REMOTE CONTROL

The descriptions in this manual are based on the buttons on the remote control. Please read this manual carefully to use the monitor correctly. To install batteries, open the battery cover, place batteries (1.5 V AAA) matching ⊕ and ⊖ terminals to the labels inside the compartment, and close the battery cover. To remove the batteries, perform the installation actions in reverse. The illustrations may differ from the actual accessories.

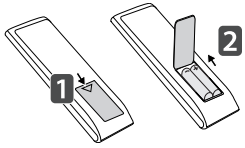

⚠ CAUTION

- Do not mix old and new batteries, as this may damage the remote control.
- Be sure to point the remote control toward the remote control sensor on the monitor.
- Some features of the remote control may not be supported in certain models.

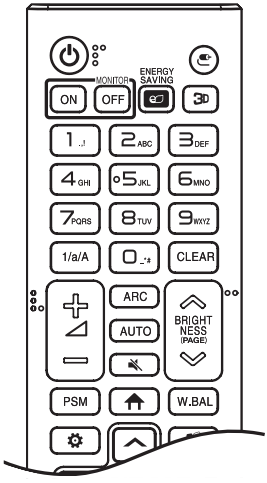

(POWER) Turns the monitor on or off.

MONITOR ON Turns the monitor on.

MONITOR OFF Turns the monitor off.

ENERGY SAVING Adjusts the brightness of the picture to reduce energy consumption.

(INPUT) Selects the input mode.

3D Used for viewing 3D videos. (This model does not support this.)

1/a/A Toggles between numerical and alphabetical.

Number and Alphabet buttons

Enters numerical or alphabetical characters depending upon the setting. (Depending upon the model, this feature may not be supported.)

CLEAR Deletes the entered numerical or alphabetical character. (Depending upon the model, this feature may not be supported.)

Volume Up/Down Button Adjusts the volume.

ARC Selects the Aspect Ratio mode.

AUTO Automatically adjusts picture position and minimizes image instability (available for RGB input only). (Depending upon the model, this feature may not be supported.)

(MUTE) Mutes all sounds.

BRIGHTNESS (PAGE) Adjusts the brightness of the display. PAGE function is not supported in this model. (Depending upon the model, this feature may not be supported.)

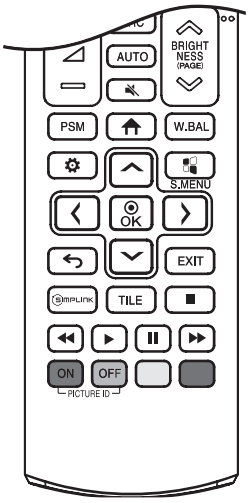

PSM Selects the Picture Mode.

(HOME) Activates the Launcher.

W.BAL Enters the White Balance menu.

(SETTINGS) Accesses the main menus or saves your input and exit menus.

S.MENU SuperSign menu key. (Depending upon the model, this feature may not be supported.)

Navigation Buttons Scrolls through menus or options.

OK Selects menus or options and confirms your input.

(BACK) Allows you to move back one step in the user interaction function.

EXIT Quit all OSD tasks and applications.

SIMPLINK Allows you to control various multimedia devices to enjoy multimedia simply by using the remote control through the SimpLink menu. (Depending upon the model, this feature may not be supported.)

TILE Selects the TILE Mode.

PICTURE ID ON/OFF When the Picture ID number matches the Set ID number, you can control whichever monitor you want in multi-display format.

USB Menu Control Buttons Controls media playback.

MAKING CONNECTIONS

You can connect various external devices to your monitor. Change the input mode and select the external device you want to connect. For more information about external device connections, see the user manual provided with each device.

Connecting to a PC

Some of the cables are not provided.

This monitor supports the Plug and Play* feature.

* Plug and Play: a feature that enables a PC to recognize devices attached by the user without device configuration or user intervention when powering up.

External Device Connection

Connect a HD receiver, DVD, or VCR player to the monitor and select an appropriate input mode.

Some of the cables are not provided. For the best picture and sound quality, connecting external devices to your monitor using HDMI cables is recommended.

Using the Input List

→

- RGB, HDMI, DVI-D, DISPLAYPORT, COMPONENT, AV

NOTE

- For the best image quality, using the monitor with HDMI connection is recommended.
- To comply with the specifications of the product, use a shielded interface cable with ferrite core, such as a D-sub 15-pin cable and DVI-D/HDMI cable.
- If you turn the monitor on when the set is cold, the screen may flicker. This is normal.
- Sometimes red, green, or blue spots may appear on the screen. This is normal.
- Use a High Speed HDMI®/™ cable.
- Use a certified cable with the HDMI logo attached. If you do not use a certified HDMI cable, the screen may not display or a connection error may occur.
- Recommended HDMI Cable Types
  - High-Speed HDMI®/™ Cable
  - High-Speed HDMI®/™ Cable with Ethernet
- If you cannot hear any sound in HDMI mode please check your PC settings. Some PCs require you to manually change the default audio output to HDMI.
- If you want to use HDMI-PC mode, you must set your PC/DTV to PC mode.
- You may experience compatibility issues if you use HDMI-PC mode.
- Make sure the power cable is disconnected.
- If you connect a gaming device to the monitor, use the cable provided with the gaming device.
- It is recommended to use the speakers that are provided as optional accessories.
- High Speed HDMI®/™ cables transmit a HD signal up to 1080p and higher.
- Use the standard Macintosh adapter since an incompatible adapter is available in the market. (Different signaling system)
- Apple computers may require an adapter to connect to this monitor. Call or visit their web site for more information.
- When connecting to the component port using the shared interface, the port must match up to the input source. Otherwise, noise may occur.
- When connecting an external audio device, use a device with audio amplifier.

CAUTION

- Connect the signal input cable and tighten it by turning the screws clockwise.
- Do not press the screen with your finger for a prolonged period as this may result in temporary distortion on the screen.
- Avoid displaying static images on the screen for a long period of time to prevent image burn. Use a screensaver if possible.
- A wireless communication device near your monitor can affect the image.

Daisy Chain Monitors

To use different products connected to each other, connect one end of the signal input cable (DP Cable) to the DP Out connector of Monitor 1 and connect the other end to the DP In connector of the other product.

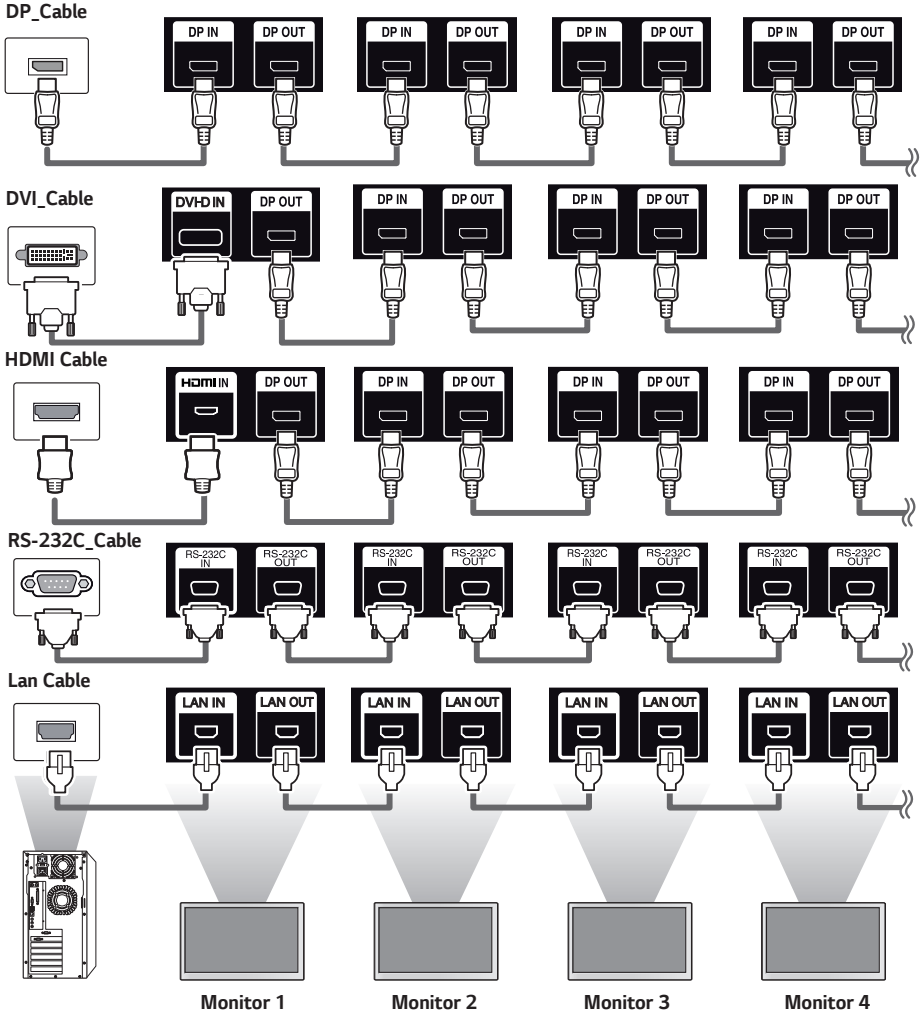

NOTE

- If the signal cable between the product and your PC is too long, make sure to use the Booster or optical cable.
- Daisy chaining the video output may be limited depending on the performance of the input device that supports HDCP.

TROUBLESHOOTING

No image is displayed.

Problem	Action
Is the product power cord connected?	• Check if the power cord is correctly plugged into the power outlet.
Does the “Invalid Format” message appear?	• The signal from the PC (Graphics card) is out of the vertical or horizontal frequency range of the product. Adjust the frequency range by referring to the Specifications in this manual.
Does the “No Signal” message appear?	• The signal cable between PC and product is not connected. Check the signal cable. • Access the input menu to check the input signal.

The Unknown Product message appears when the product is connected.

Problem	Action
Did you install the driver?	• Check if the Plug and Play function is supported by referring to the graphics card user manual.

The screen image looks abnormal.

Problem	Action
Is the screen position wrong?	• Check if the graphics card resolution and frequency are supported by the product. If the frequency is out of range, set to the recommended resolution in the [Control Panel] → [Display] → [Setting] menu. (The settings may differ depending on your operating system.)
The screen is displayed abnormally.	• The proper input signal is not connected to the signal port. Connect the signal cable that matches with the source input signal.

After-image appears on the product.

Problem	Action
After-image appears when the product is turned off.	• If you use a fixed image for a long time, the pixels may be damaged. Use the screen-saver function. • When a dark image is displayed on the screen after an image with high contrast (black and white or gray), this may cause image sticking. This is normal for LCD screen products.

Screen color is abnormal.

Problem	Action
Screen has poor color resolution (16 colors).	• Set the number of colors to more than 24 bits (true color). Select [Control Panel] → [Display] → [Settings] → [Color Table] in Windows. (The settings may differ depending on your operating system.)
Screen color is unstable or mono-colored.	• Check the connection status of the signal cable. Or, re-insert the PC graphics card.
Do black spots appear on the screen?	• Several pixels (red, green, blue, white, or black color) may appear on the screen, which can be attributable to the unique characteristics of the LCD panel. This is not a malfunction of the LCD.

The operation does not work normally.

Problem	Action
The power suddenly turned off.	• Is the Timer set? • Check the power control settings. Power interrupted.

⚠ CAUTION

- Image sticking does not occur when using constantly changing images but may occur when using a fixed image for an extended period of time. Therefore, it is recommended that you use the instructions below to decrease the likelihood of image sticking occurring when using a fixed image. It is recommended that you change the screen at least once every 12 hours at the very minimum; if done more frequently, the prevention of image sticking is more effective.

Recommended operating conditions

1 Change the background and the character colors using the same time interval.

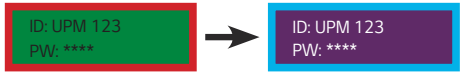

When changing colors, using complementary colors helps to prevent image sticking.

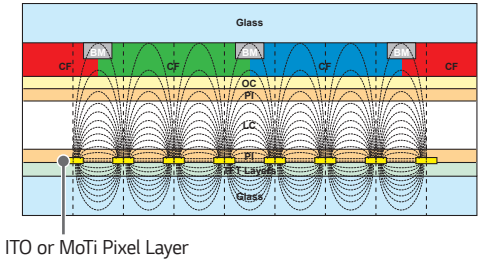

ITO or MoTi Pixel Layer

2 Change the image using the same time interval.



Make sure that the characters or images before changing the image remain in the same location after changing the image.

What is image sticking?

When the LCD panel displays a static image for an extended period of time, it can cause a voltage difference between the electrodes that operate the liquid crystals. When the voltage difference between the electrodes builds up over time, liquid crystals have a tendency to remain aligned in one direction. During this process, a previously displayed image remains visible. This phenomenon is referred to as image sticking.

PRODUCT SPECIFICATIONS

The product specifications below may be changed without prior notice due to upgrade of product functions.
" ~ " refers to alternating current (AC), and " ⎓ " refers to direct current (DC).

LCD screen	Screen type	Thin Film Transistor (TFT) Liquid Crystal Display (LCD) Screen
Video signal	Maximum resolution	HDMI, DisplayPort: 3840 x 2160 @ 30 Hz RGB, DVI-D: 1920 x 1080 @ 60 Hz - This may not be supported on some OS or graphics card types.
	Recommended resolution	1920 x 1080 @ 60 Hz - This may not be supported on some OS or graphics card types.
	Horizontal frequency	RGB: 30 kHz to 83 kHz HDMI/ DVI-D/ DisplayPort: 30 kHz to 83 kHz
	Vertical frequency	RGB: 50 Hz to 75 Hz HDMI/ DVI-D/ DisplayPort: 56 Hz to 60 Hz 3840 x 2160 24p, 25p, 30p.
	Synchronization	Separate Sync, Digital
Input/output ports		IR IN, RS-232C IN/OUT, HDMI IN, DVI-D IN, DP IN/OUT, USB 3.0 IN, RGB/COMPONENT/AV IN, AUDIO IN/OUT, LAN IN/OUT
Embedded battery		Applied
Environmental Conditions	Operating Temperature Operating Humidity	0 °C to 40 °C 10 % to 80 %
	Storage Temperature Storage Humidity	-20 °C to 60 °C 5 % to 85 %

55VX1D

LCD screen	Pixel pitch	0.630 mm (H) x 0.630 mm (V)
Power	Rated power	AC 100-240 V ~ 50/60 Hz 2.7 A
	Power consumption	On Mode: 250 W (Typ.) Sleep Mode: ≤ 0.5 W Off Mode: ≤ 0.5 W
Dimensions (Width x Height x Depth) / Weight	1213.4 mm x 684.2 mm x 92.8 mm / 23.5 kg	

RGB (PC) Support Mode

Resolution	Horizontal frequency (kHz)	Vertical frequency (Hz)
640 x 480	31.469	59.94
720 x 400	31.468	70.08
800 x 600	37.879	60.317
1024 x 768	48.363	60.0
1280 x 720	44.772	59.855
1280 x 1024	63.981	60.02
1600 x 900	60	60
1680 x 1050	65.290	59.954
1920 x 1080	67.5	60

DVI/HDMI/ DisplayPort (PC) Support mode

Resolution	Horizontal frequency (kHz)	Vertical frequency (Hz)
800 x 600	37.879	60.317
1024 x 768	48.363	60
1280 x 720	44.772	59.855
1280 x 1024	63.981	60.02
1366 x 768	47.712	59.79
1680 x 1050	65.290	59.954
1920 x 1080	67.5	60
3840 x 2160 (HDMI/DP)	67.5	30

HDMI / DisplayPort (DTV) Support Mode

Resolution	Horizontal frequency (kHz)	Vertical frequency (Hz)
480/60p	31.469	59.94
576/50p	31.25	50
720/50p	37.5	50
720/60p	45	60
1080/50i	28.1	50
1080/60i	33.75	60
1080/50p	56.25	50

1080/60p	67.432	59.94
1080/60p	67.5	60
2160/24p (HDMI/DP)	54	24
2160/25p (HDMI/DP)	56.25	25
2160/30p (HDMI/DP)	67.5	30

Component Support Mode

Resolution	Horizontal frequency (kHz)	Vertical frequency (Hz)
720 x 576	15.625	50.00
720 x 576	31.25	50.00
1280 x 720	45.00	60.00
1280 x 720	37.5	50
1280 x 720	44.96	59.94
1920 x 1080	31.25	50.00
1920 x 1080	56.25	50
1920 x 1080	33.75	60.00
1920 x 1080	33.72	59.94
1920 x 1080	67.5	60

CVBS(AV, Composite) Support Mode

Resolution	Horizontal frequency (kHz)	Vertical frequency (Hz)	Remark
720 x 480	15.734	59.94	NTSC 480i
720 x 576	15.625	50.00	PAL 576i

NOTE

- When the cable is connected to the DVI-D, HDMI or the DisplayPort, you can select the PC/DTV mode optionally. It is recommended that you select PC mode when connecting to a PC and select DTV mode when connecting to other devices. The DTV mode refers to all modes excluding the PC mode.
- Vertical frequency: The product display functions by the screen image changing dozens of times every second like a fluorescent lamp.

  The vertical frequency or refresh rate is the number of image displays per second. The unit is Hz.
- Horizontal frequency: The horizontal interval is the time taken to display one horizontal line. When 1 is divided by the horizontal interval, the number of horizontal lines displayed every second can be tabulated as the horizontal frequency. The unit is kHz.

TO SEE THE WEB MANUALS (SOFTWARE USER GUIDE / INSTALLATION MANUAL)

You can find more information about the LG Digital Signage (Monitor Signage) in the web manuals (Software User Guide / Installation Manual).

For more information, visit the LG website at *http://partner.lge.com*.

LG
Life's Good



ENERGY STAR® is a set of power-saving guidelines issued by the U.S.Environmental Protection Agency (EPA).
As an ENERGY STAR® Partner LGE U. S. A., Inc. has determined that this product meets the ENERGY STAR® guidelines for energy efficiency.
Refer to ENERGYSTAR.gov for more information on the ENERGY STAR® program.

Make sure to read the Safety Precautions before using the product.

The model and serial numbers of the SET are located on the back and one side of the SET. Record it below should you ever need service.

MODEL _____

SERIAL _____

Temporary noise is normal when powering ON or OFF this device.