Printing Specification

1. Specification

Models	1. Model Name:	OLED G4
	2. Suffix:	TR
	3. Part No:	MFL72097701
	4. REV	REV00
	5. Number of pages	16
	6. Folded/Unfolded	3 Folded
SIZE	7. Trim size (W x H)_Unfolded (mm)	296 x 420(+/-5)
	8. Trim size (W x H)_folded (mm)	148 x 105
	9. Bindery	-
COVER	10. Color (Cover)	-
	11. Paper (Cover)	-
	12. Weight (cover) (g/㎡)	-
INNER	13. Color (inner)	4(CMYK)
	14. Paper (inner)	Wood free
	15. Weight (inner) (g/㎡)	70(+/-10)
	16. Coating	No
	17. Thomson	No
	18. Sub-material	No
	19. Languages	ENG

1.1 Folding / Cover

Folded Step

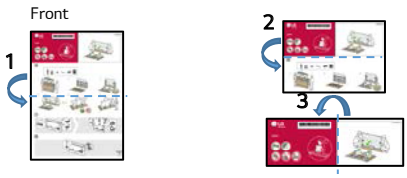

Folded

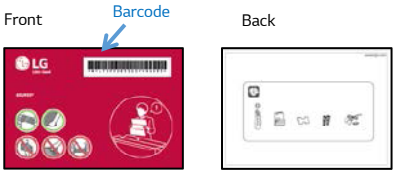

2. Origin Notification

Changes the Country name.

Printed in Korea ← Printed in[Country Name in English]

Copyright © 2021 LG Electronics Inc. All Rights Reserved.

Imprimé en Corée ← Imprimé en(au)[Country Name in French]

Copyright © 2021 LG Electronics inc. Tous droits réservés.

www.lg.com

[blank]

[PRODUZIDO NO POLO INDUSTRIAL DE MANAUS CONHEÇA A AMAZÔNIA LG Electronics do Brasil Ltda. CNPJ: 01.166.372/0008-21 Rua Javari, nº 1004, Distrito Industrial, CEP 69075-110, Manaus/AM, Indústria Brasileira]

[Country Name] (ENG/FRE)

LGERS / LGEMX :	Printed in Mexico Imprimé au Mexique
LGEKR :	Printed in Korea Imprimé en Corée
LGEMA :	Printed in Poland Imprimé en Pologne
LGEND :	Printed in China Imprimé en Chine
LGEIN :	Printed in Indonesia Imprimé en Indonésie
Brazil :	Printed in [Each Contry name] [Image] (LGEAZ production only)
Others :	Each Country name.

NOTE

[Restriction of Hazardous Substances]

Hazardous substances on this product should be satisfied by substance regulation of Level A-I, A-II, SVHC according to LG(52)B—5011 standard.

Especially, Part should be followed and controlled the following specification.

(1) Hazardous substances test report should be submitted when part certification test and first mass production.

(2) Especially, Don't use or contain lead (Pb) and cadmium (Cd) in ink.

INK REQUIREMENT FOR EU

(1) The amount of MOAH/MOSH must be less than 0.1% of the weight of the INK used.

* MOAH(Mineral Oil Aromatic Hydrocarbons) : Consisting of 1 to 7 aromatic cycles

* MOSH(Mineral Oil Saturated Hydrocarbons) : Consisting of 16 to 35 carbon atoms

(2) From 01 January 2025 : Ban on the use of MOAH in INK up to a limit of one part per million(1ppm) for compounds of 3 to 7 aromatic cycles

3. History

Rev. Number	Date	Description	ECO Number	Owner	
REV07					
REV06					
REV05					
REV04					
REV03					
REV02					
REV01					
REV00	2023-12-18			Checked	Nitin H
				Approved	Santosh C.

LG

MFL72097701240 2REV00

Quick Start Guide

OLED55G4*
OLED65G4* OLED83G4*
OLED77G4* OLED97G4*





www.lg.com
Printed in India







55/65”*A
77/83/97”

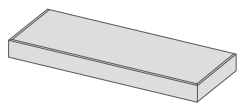

55”*B/65”*B

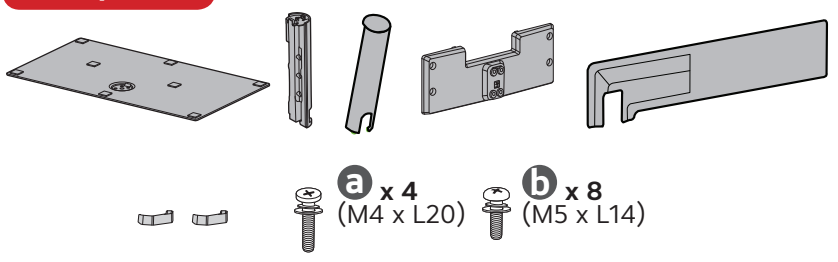

Images and Accessory parts shown in manual may vary depending on model.

Unpacking

Check your product box for the following items. If there are any missing accessories, contact the local dealer where you purchased your product.
The illustrations in this manual may differ from the actual product and item.

55/77” 65”*A

1

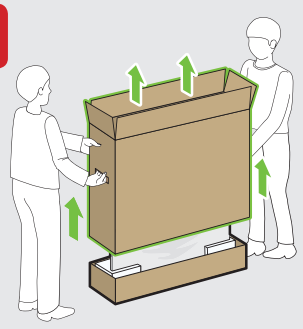

83/97”

1

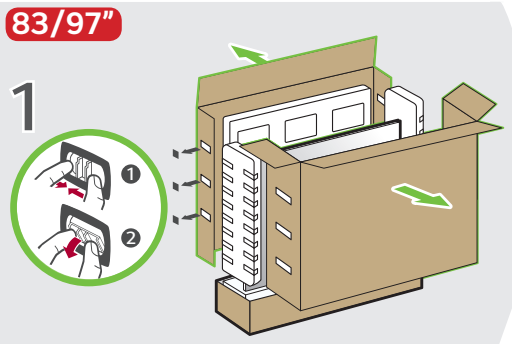

55/77/83/97” 65”*A

2

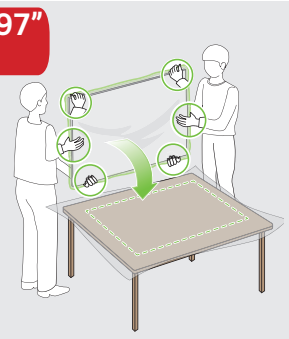

3

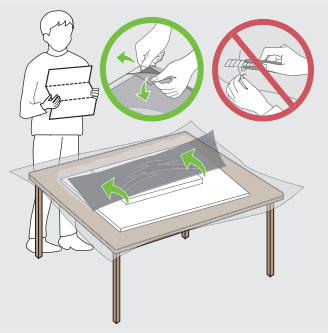

65”*B

1



2

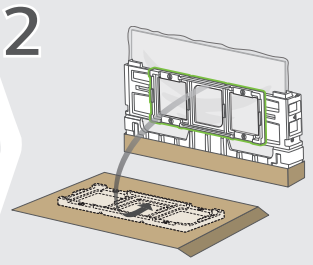

3

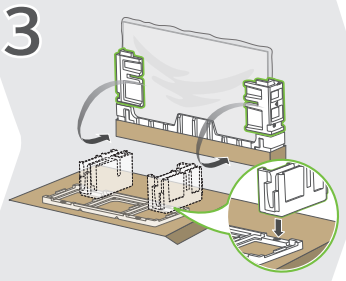

4

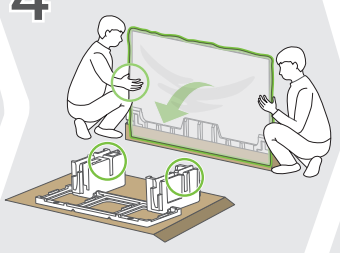

5



6

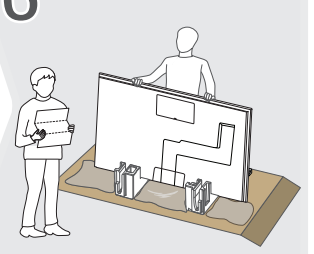

55”*A/65”*A

1

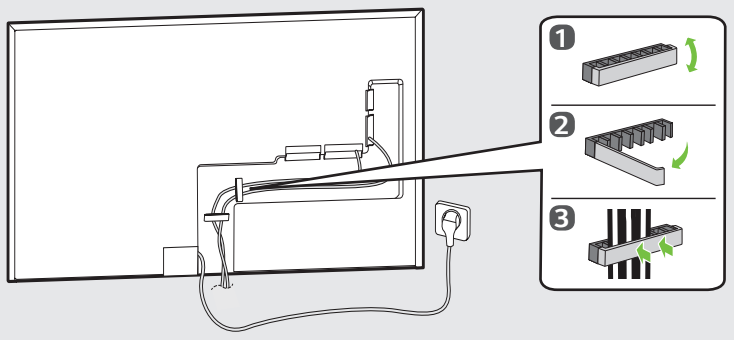

55”*B/65”*B

1

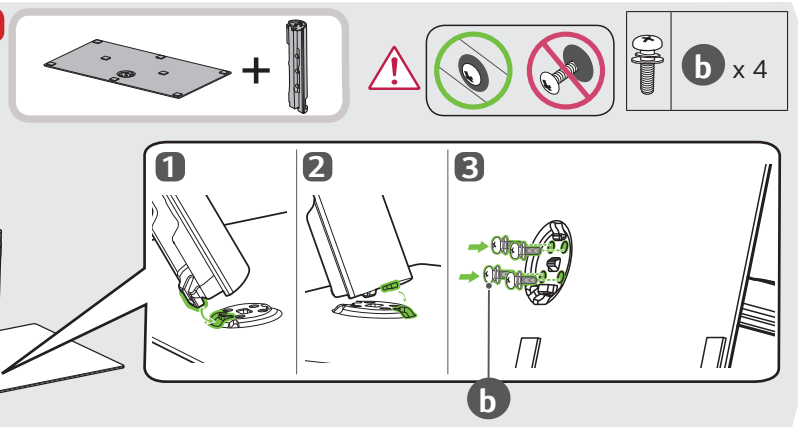

2

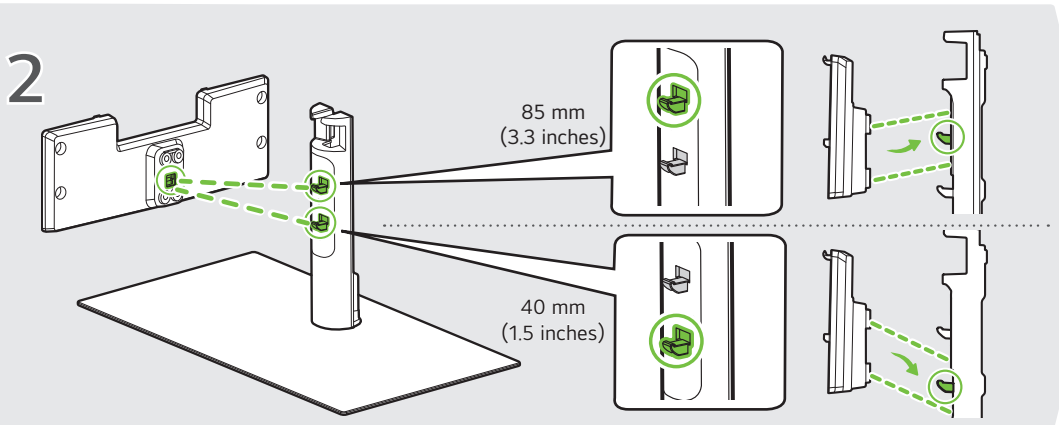

3

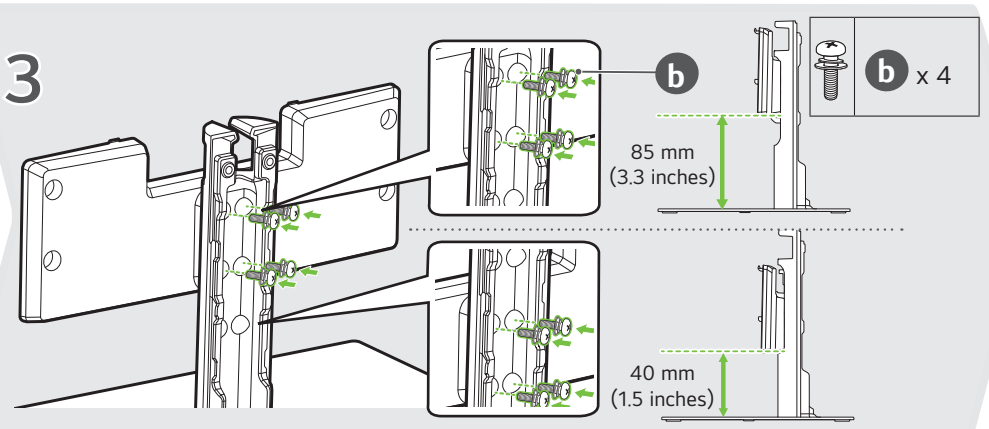

55”*B

4

5

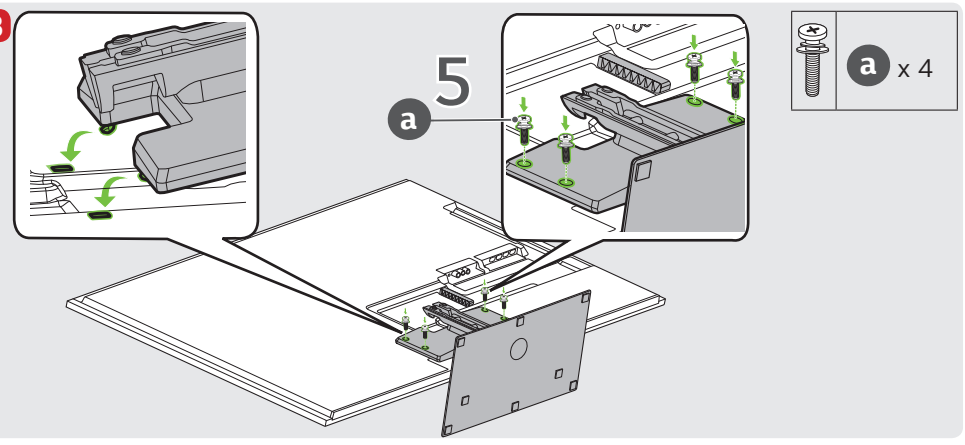

65”*B

4

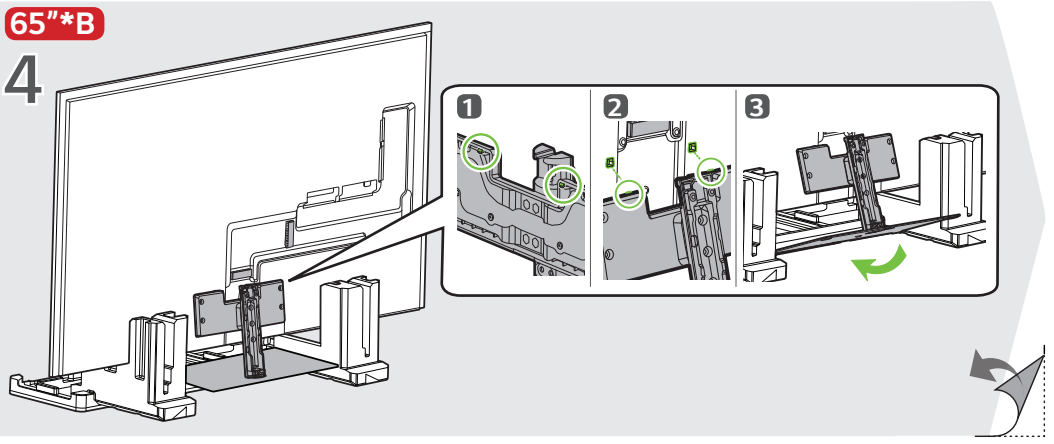

65"*B

5

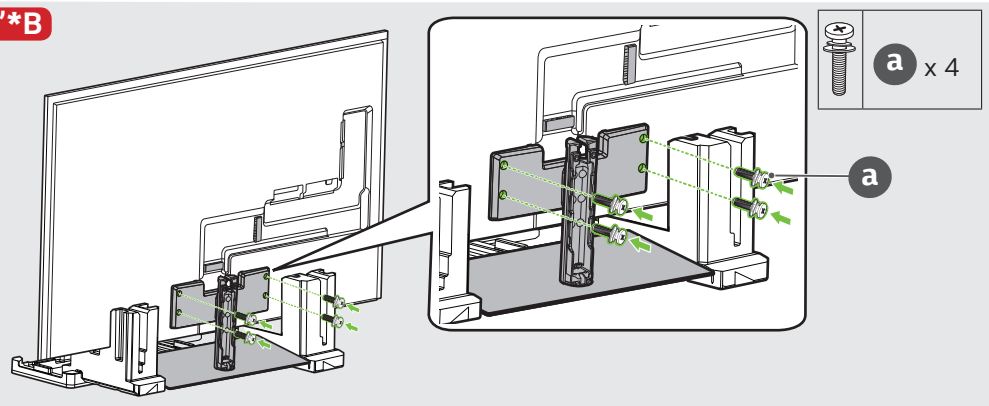

55"*B/65"*B

6

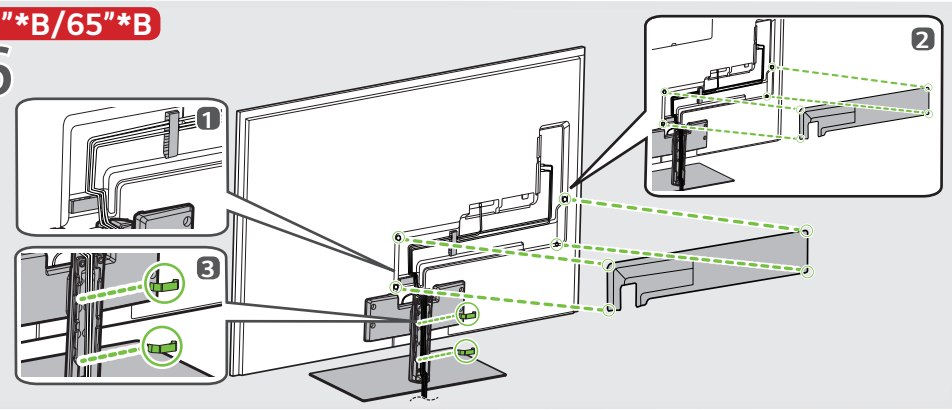

55"*B/65"*B

7

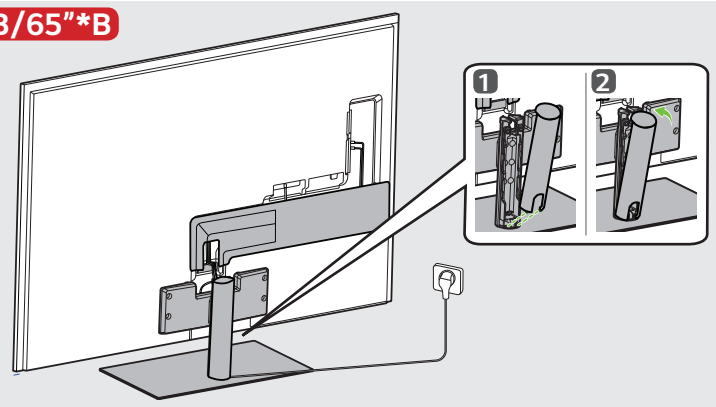

77/83/97"

1

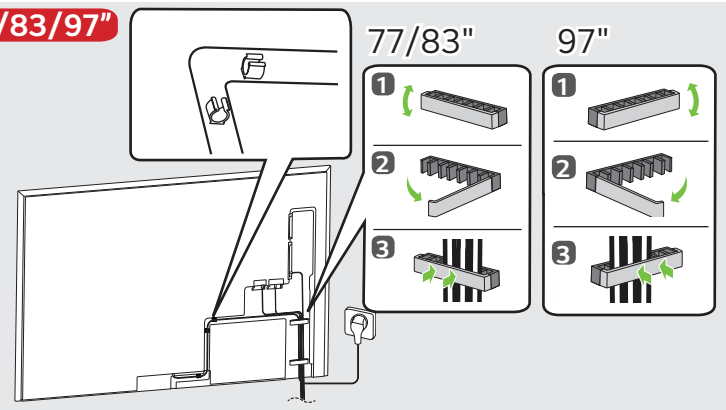

55"*B/65"*B
77/83/97"

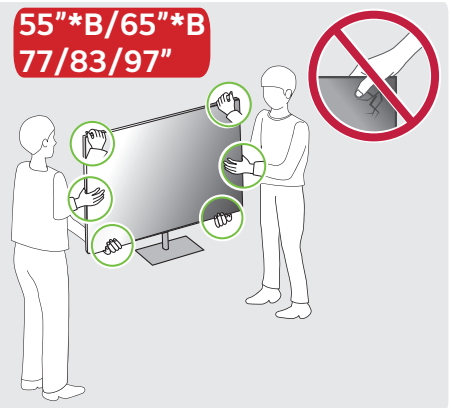

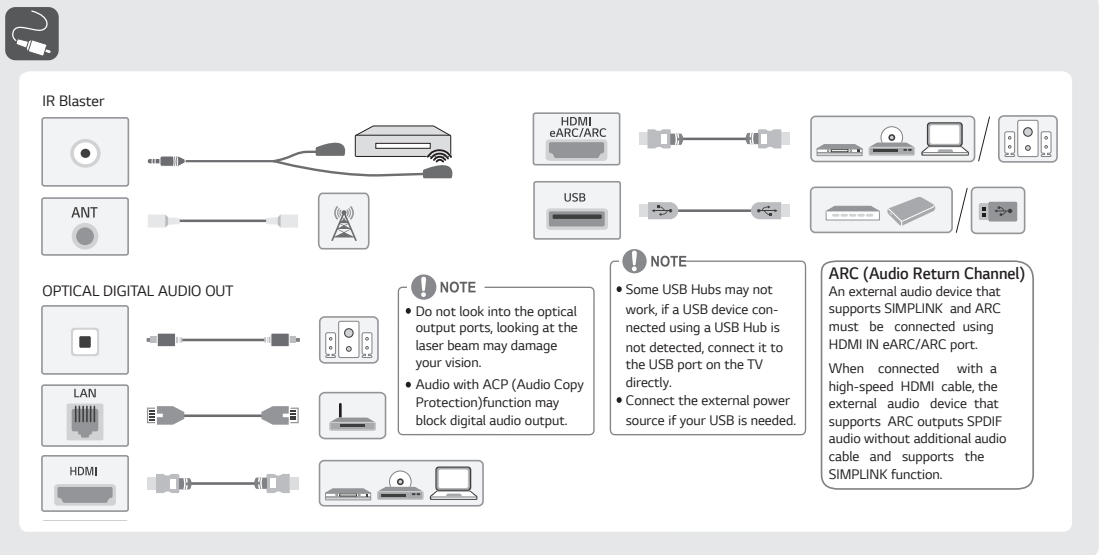



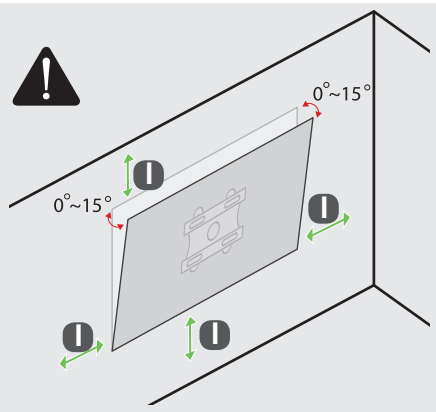

mm (inches)

I	
OLED55G4*	100 mm (3.9) inches
OLED65G4*	
OLED77G4*	
OLED83G4*	
OLED97G4*	300 mm (11.8) inches

mm (inches)
kg (lbs)

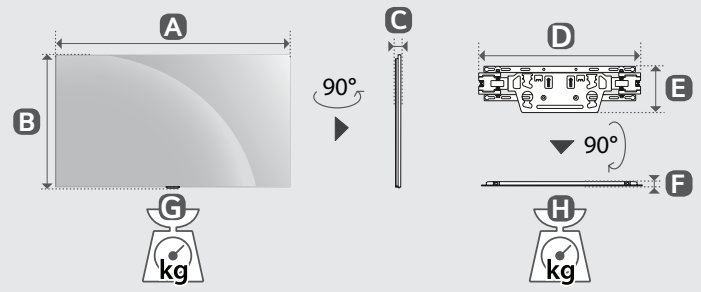

MODELS	A	B	C	D	E	F	G	H	Power consumption
OLED55G4*	1222 mm (48.1) inches	703 mm (27.6) inches	27.2 mm (1.0) inches	452 mm (17.7) inches	129 mm (5.0) inches	13 mm (0.5) inches	17.9 kg (39.4) lbs	1.2 kg (2.6) lbs	381 W
OLED65G4*	1441 mm (56.7) inches	826 mm (32.5) inches	24.3 mm (0.9) inches	452 mm (17.7) inches	129mm (5.0) inches	13 mm (0.5) inches	23.8 kg (52.4) lbs	1.2 kg (2.6) lbs	516 W
OLED77G4*	1712 mm (67.4) inches	982 mm (38.6) inches	24.8 mm (0.9) inches	452 mm (17.7) inches	129mm (5.0) inches	13 mm (0.5) inches	37.4 kg (82.4) lbs	1.2 kg (2.6) lbs	704 W
OLED83G4*	1847 mm (72.7) inches	1057 mm (41.6) inches	28 mm (1.1) inches	452 mm (17.7) inches	129 mm (5.0) inches	13 mm (0.5) inches	40.9 kg (90.1) lbs	1.2 kg (2.6) lbs	823 W

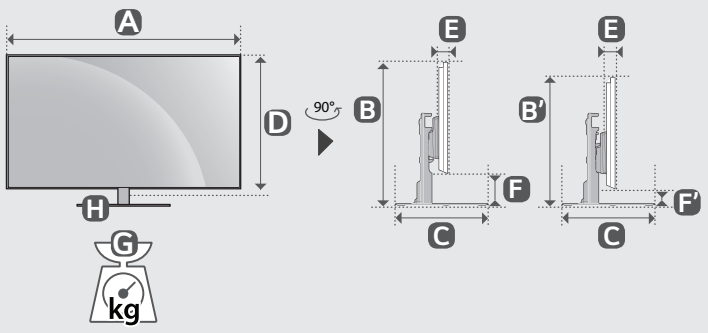

MODELS	A	B / B'	C	D	E	F / F'	G	G - H	Power consumption
OLED55G4*B	1222 mm (48.1) inches	787 / 742 mm (30.9 / 29.2) inches	263 mm (10.3) inches	703 mm (27.6) inches	27.2 mm (1.0) inches	85 / 40 mm (3.3 / 1.5) inches	23.2 kg (51.1) lbs	17.9 kg (39.4) lbs	381 W
OLED65G4*B	1441 mm (56.7) inches	910 / 865 mm (35.8 / 34.0) inches	263 mm (10.3) inches	826 mm (32.5) inches	24.3 mm (0.9) inches	85 / 40 mm (3.3 / 1.5) inches	29.1 kg (64.1) lbs	23.8 kg (52.4) lbs	516 W

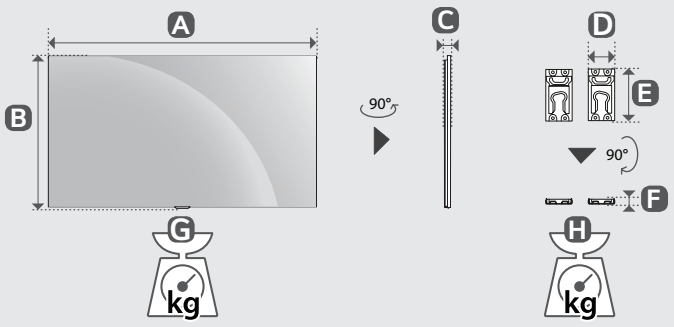

MODELS	A	B	C	D	E	F	G	H	Power consumption
OLED97G4*	2155 mm (84.8) inches	1225 mm (48.2) inches	28.2 mm (1.1) inches	134.8 mm (5.3) inches	254 mm (10) inches	16 mm (0.6) inches	57 kg (125.6) lbs	2.8 kg (6.1) lbs	1067 W (1067 W)

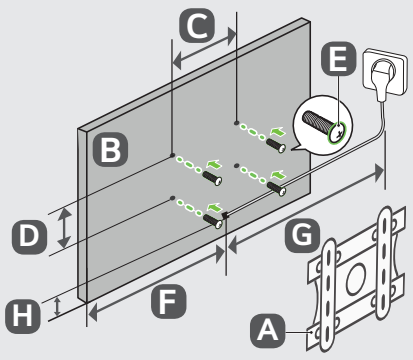

mm (inches)

A	B	C x D (mm)	E	F (mm)	G (m)	H (mm)
Wallmount Bracket	OLED55G4*	300 x 200 mm (11.8 x 7.8) inches	M6	544 mm (21.4) inches	≧1.5 m (59.0) inches	56 mm (2.2) inches
	OLED65G4*	300 x 300 mm (11.8 x 11.8) inches		654 mm (25.7) inches		56 mm (2.2) inches
	OLED77G4*			856 mm (33.7) inches		57 mm (2.2) inches
	OLED83G4*	400 x 400 mm (15.7 x 15.7) inches		924 mm (36.3) inches		59 mm (2.3) inches
	OLED97G4*	600 x 400 (23.6 x 15.7) inches	M8	943 mm (37.1) inches		142 mm (5.5) inches

* : 0~9, A~Z