FLOOR STANDING TYPE AIR CONDITIONERS INSTALLATION INSTRUCTIONS

ENGLISH
ITALIANO
ESPAÑOL
FRANÇAIS
DEUTSCH

- Please read this instruction sheet completely before installing the product.
- When the power cable is wanted to replace, replacement work shall be performed by authorized personnel only.
- Installation work must be performed in accordance with national wiring standards by authorized personnel only.

Applied Model:

(1) 20K/28K/30K/40K(Btu/h)

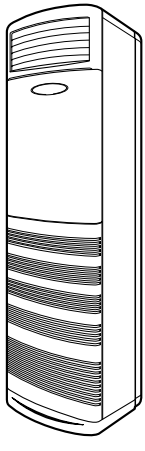

(2) 50K(Btu/h)

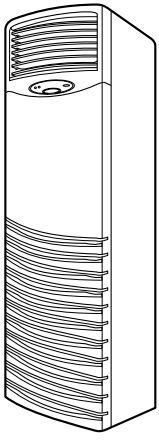

(3) 80K(Btu/h)

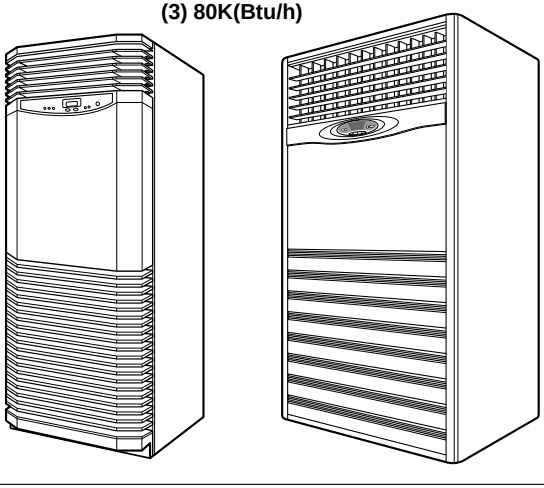

P/No. : 3828A20155B

Contents

1. Safety precautions 3

2. Installation of Indoor, Outdoor Unit 4
   1) Selection of the best location
   2) Indoor unit installation
   3) Outdoor unit installation
   4) Refrigerant amount

3. Installation Method 6
   1) Procedure
   2) Preparation of installation parts and tools

4. Piping of Indoor Unit 8
   1) Preparation of piping
   2) Connection of piping
   3) Precautions in bending

5. Connecting the Cable to Indoor Unit 10

6. Connecting the Cable to tele control Unit 11

7. Connecting piping and the Cable to Outdoor Unit 12
   1) Connecting the piping to the outdoor unit
   2) Connecting the cable to the outdoor unit

8. Power Supply and Wiring 13
   1) Power spply
   2) Wiring

9. Vacuum Drying of the Connecting Pipes and the Indoor Unit 14

10. Checking the Drainage and Form the Piping 15
    1) Checking the Drainage
    2) Form the Piping

11. Final Check and Test Run 17

1. Safety precautions

- Please report to or take consent by the supply authority before connection to the system.
- Be sure to read "THE FOLLOWING SHOULD ALWAYS BE OBSERVED FOR SAFETY" before installing the air conditioner.
- Be sure to observe the cautions specified here as they include important items related to safety.
- The indications and meanings are as follows.

⚠ **WARNING**	Could lead to death, serious injury, etc.
⚠ **CAUTION**	Could lead to serious injury in particular environments when operated incorrectly.

- After reading this manual, be sure to keep it together with the instruction manual in a handy place on the customer's site.

⚠ WARNING

Do not install it yourself (customer).

- Incomplete installation could cause injury due to fire, electric shock, the unit falling or a leakage of water. Consult the dealer from whom you purchased the unit or special installer.

Install the unit securely in a place which can bear the weight of the unit.

- When installed in an insufficient strong place, the unit could fall causing injured.

Use the specified wires to connect the indoor and outdoor units securely and attach the wires firmly to the terminal board connecting sections so the stress of the wires is not applied to the sections.

- Incomplete connecting and fixing could cause fire.

Check that the refrigerant gas due not leak after installation is completed.

Perform the installation securely referring to the installation manual.

- Incomplete installation could cause a personal injury due to fire, electric shock, the unit falling or a leakage of water.

Perform electrical work according to the installation manual and be sure to use an exclusive circuit.

- If the capacity of the power circuit is insufficient or there is incomplete electrical work, it could result in a fire or an electric shock.

Attach the electrical part cover to the indoor unit and the service panel to the outdoor unit securely.

- If the electrical part cover if the indoor unit and/or the service panel if the outdoor unit are not attached securely, it could result in a fire or electric shock due to dust, water, etc.

Be sure to use the part provided or specified parts for the installation work.

- The use of defective parts could cause an injury or leakage of water due to a fire, electric shock, the unit falling, etc.

⚠ CAUTION

Perform grounding

- This product should be grounded.
- Defective grounding could cause an electric shock.

Do not install the unit in a place where an inflammable gas leaks.

- If gas leaks and accumulates in the area surrounding the unit, it could cause an explosion.

Perform the drainage/piping work securely according to the installation manual.

- If there is a defect in the drainage/piping work, water could drop from the unit and household goods could be wet and damaged.

The means for connection to power supply shall be incorporated in the fixed wiring and have an air gap contact separation of at least 3mm in all active(phase) conductors.

2. Installation of Indoor, Outdoor unit

1) Selection of the best location

① Indoor unit

- There should not be any heat source or steam near the unit.
- There should not be any obstacles to prevent the air circulation.
- A place where air circulation in the room will be good.
- A place where drainage can be easily obtained.
- A place where noise prevention is taken into consideration.
- Do not install the unit near the door way.
- Ensure the spaces indicated by arrows from the wall, ceiling, fence, or other obstacles.

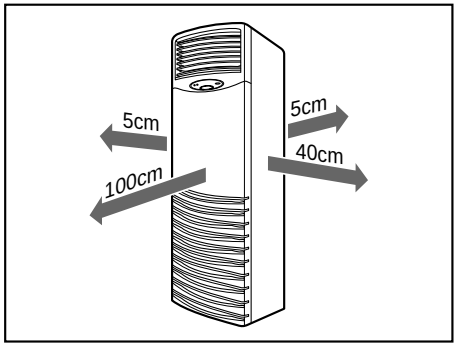

② Outdoor unit

- If an awning is built over the unit to prevent direct sunlight or rain exposure, be careful that heat radiation from the condenser is not restricted.
- There should not be any animals or plants which could be affected by discharged hot air.
- Ensure the space indicated by arrows from the wall, ceiling, fence, or other obstacles.

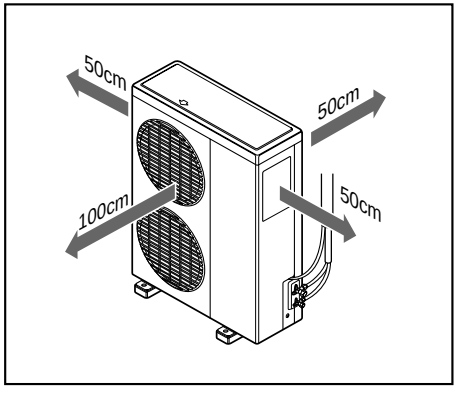

③ Piping length and the elevation

MODEL	PIPE SIZE		Max. Length A (m)	Max. Elevation B (m)
	GAS SIDE	LIQUID SIDE		
20K	5/8"	1/4"	25	15
28K/30K/40K	5/8"	3/8"	30	20
50K	3/4"	3/8"	40	25
80K	1"	5/8"	50	30

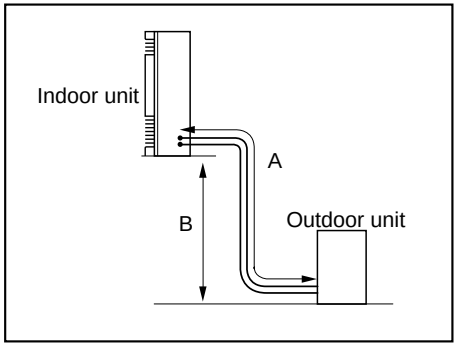

2) Indoor Unit installation

① The mounting floor should be strong and solid enough to prevent it from vibration.

② Drill the piping hole with 70mm diameter hole-core drill at either the right or the left of indoor unit. The hole should be sightly slant to the outdoor side.

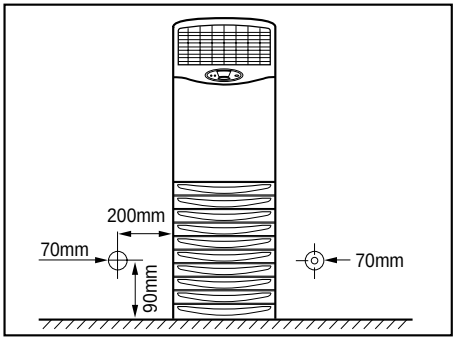

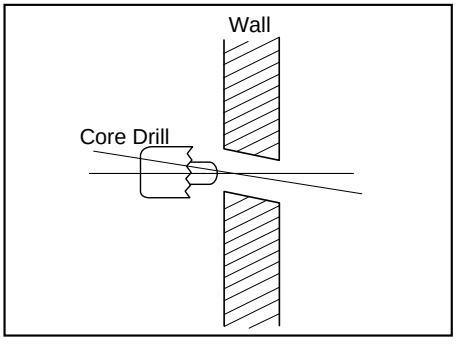

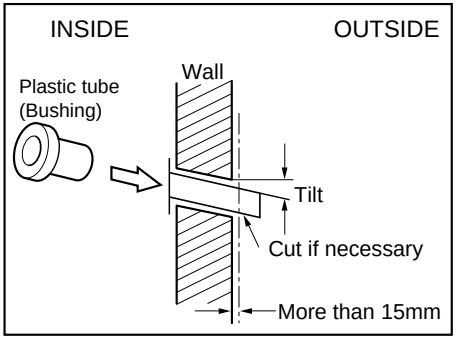

③ Insert the plastic tube through the hole.

④ Cut the extruded outside part of the plastic tube, if necessary.

3) Outdoor unit Installation

① Install the outdoor unit on the concrete or any solid base securely and horizontally by securing it with bolts (Ø12mm) and nuts.

② If there is any vibration transmitted to the building, mount the rubber underneath the outdoor unit.

4) Refrigerant amount

Before shipment, this air conditioner is filled with the rated amount of refrigerant including additional amount required for air-purging, subject to 5m piping length. (The rated amount of refrigerant is indicated on the name plate.) But when the piping length exceeds 5 meters, additional charge is required according to the following table.

(Unit: g)

MODEL	REFRIGERANT CHARGE
20K/28K/30K/40K (Btu/h)	30g per 1m
50K (Btu/h)	40g per 1m
80K (Btu/h)	50g per 1m

Example) 28K/30K
In case of 10m long pipe(one-way), the amount of refrigerant to be replenished is:
(10 - 5) x 30 = 150g

3. Installation Method

1) Procedure

No.	Installation works	Descriptions
1	Preparation of tools and installation parts	Preparation of installation
2	Flaring the pipes	To insert the flare nuts, mounted on the connection parts of both indoor and outdoor unit, onto the copper pipes.
3	Pipe bending	To reduce the flow resistance of refrigerant.
4	Connection of installation parts (elbows, socket etc)	Connection of long piping
5	Tighten the flare nut (outdoor)	Connecting the pipings of the outdoor unit.
6	Blowing the pipings	To remove dust and scale in working.
7	Tighten the flare nut (indoor)	Connecting the pipings of the indoor unit.
8	Check a gas-leakage of the connecting part of the pipings.	
9	Vacuum drying of the piping and indoor unit	The air which contains moisture and which remains in the refrigeration cycle may cause a malfunction on the compressor
10	Open the 3-way (liquid side) and 3-way (gas side) valves.	
11	Form the pipings	To prevent heat loss and sweat
12	Checking the drainage (indoor unit)	To ensure if water flow drain hose of indoor unit.
13	Connecting the cable between outdoor and indoor unit	Preparation of the operating
14	Connecting the main cable to outdoor unit	
15	Supply the power to the crankcase heater (Before the operating the unit)	To prevent the liquid back to the compressor. (Heat pump only)
16	Cooling operation (Use the remote control or display of the indoor unit)	

2) Preparation of installation parts and tools

No.	Installation Parts, Tools	Use
1	Flaring tool (Ø 6.35 - Ø 19.05)	Flaring the pipes
2	Reamer	Remove burrs from cut edges of pipes.
3	Pipe cutter (MAX 35mm Copper pipe)	Cutting the pipings
4	Wrench (M5, M4 hexagonal wrench)	To open the service valve
5	Pipe bender	Bending the pipings
6	Leak detector	Check a gas-leakage of connecting part of the pipings
7	Manifold gauge	To measure the pressure, to charge the refrigerant
8	Charge-nipple	To connect the Refrigerant Vessel
9	Vacuum pump	To remove the air in the pipe.
10	Charge cylinder balance	To measure the refrigerant amount
11	Refrigerant Vessel(Refrigerant R-22)	Gas charge Cleaning the pipe
12	Spanner	To tighten the connecting parts of the pipings
13	Monkey spanner	
14	Driver(⊕, ⊖)	
15	Plier (150mm)	Cutting the wires
16	Tapeline	To measure the length
17	Concrete drill	To make holes through the concrete wall and blocks
18	Voltmeter, Amperemeter, Clampmeter	To measure the current and voltage
19	Insulation resistance tester	To measure the insulation resistance
20	Glass thermometer	To measure the intake and outlet air temperature of the indoor unit
21	Copper tubes	To use the connecting pipings
22	Insulation material	To cover the connecting pipings
23	Tape	To finish the connecting pipings
24	Electrical Leakage Breaker	To shut off the main power
25	Cable	To connect the cable from outdoor unit to indoor unit
26	Drain hose sockets, elbows	To remote the condensing water

4. Piping of Indoor Unit

1) Preparation of piping

① Cut the pipes and the cable

- Use the accessory piping kit or the pipes purchased locally.
- Measure the distance between the indoor and the outdoor unit.
- Cut the pipes a little longer than measured distance.
- Cut the cable 1.5m longer than the pipe length.

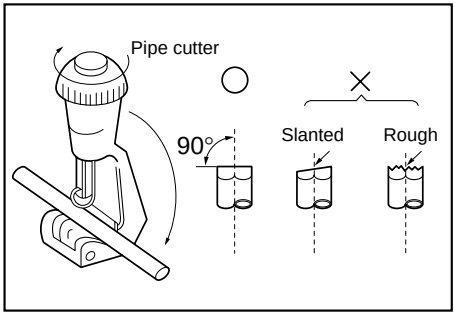

② Remove burrs.

- Remove burrs from cut edges of pipes.
- Turn the pipe end down to avoid the metal powder entering the pipe.

Caution:
If burrs are not removed, they may cause a gas leakage.

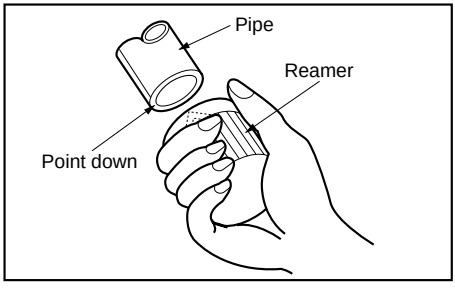

③ Flaring the pipes.

- Insert the flare nuts, mounted on the connection ports of both indoor and outdoor unit, onto the copper pipes. Some refrigerant gas may leak, when the flare nuts are removed from the indoor unit, as some gas is charged to prevent the inside of the pipe from rusting.
- Fit the copper pipe end into the Bar of flare tool about 0~0.5mm higher. (See illustaration)
- Flare the pipe ends.

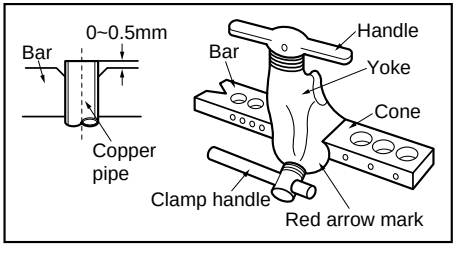

④ Tape the flaring part to protect it from dust or damages.

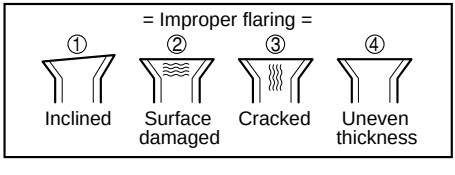

2) Connection of piping

① **Move the indoor tubing and drain hose to the hole**

- Remove tubing holder and pull the tubing out of the chassis.

② **Replace the tubing holder into original position**

③ **Route the tubing and the drain hose staight backwards.**

④ **Insert the connecting cable into the indoor unit through the hole.**

- Do not connect the cable to the indoor unit
- Make a small loop with the cable for easy connection later.

⑤ **Tape the tubing and the connecting cable.**

⑥ **Indoor unit installation.**

⑦ **Connecting the pipings to the indoor unit.**

- Align the center of the pipings and suffciently tighten the flare nut with fingers.
- Finally, tighten the flare nut with troque wrench until the wrench clicks.
  When tightening the flare nut with troque wrench, ensure the direction for tightening follows the arrow on the wrench.

PIPE SIZE	TORQUE
1/4"	1.8 Kg·m
3/8"	4.2 Kg·m
1/2"	5.5 Kg·m
5/8"	5.5 Kg·m
3/4"	6.5 Kg·m

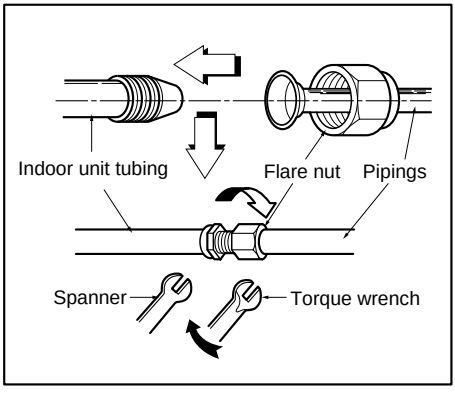

3) Precautions in bending

① **If it is necessary to bend or stretch the tubing, use the spring which is attached to the tubing in stead of pipe bender.**

- Please make a careful notice to make a smooth line.
- Hold the tubing with your two hands closely and then bend or stretch it slowly not to make any crack.
- Remember that the radius (R) should not exceed 70mm (Refer to Fig. 1)

② **Do not repeat the bending process to prevent the tubing from cracking or crushing.**

③ **Keep in mind that the bending part should not be cracked and make the radius (R) as long as possible (Refer to Fig. 2)**

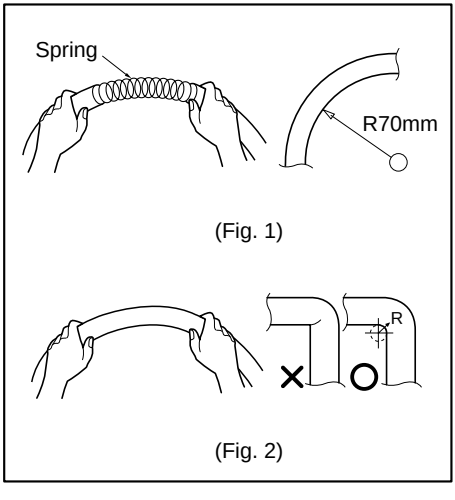

5. Connecting the Cable to Indoor Unit

• In order to protect cable, it should be inserted “Bushing Rubber”.
• The inside and outside connecting cable can be connected after opening the inlet grille.

① **Open the inlet grille manually.**

② **Open the control cover with Driver(⊕).**

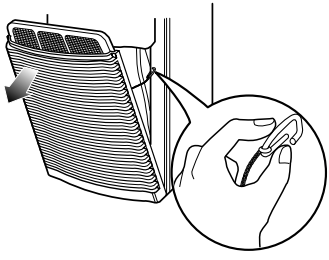

③ **Connect the supplied cables to the connector in the control box. (Method "A") (Except 80K Heat pump, LP-8091PC, LP-K Series)**

④ **Connect the supplied cables to the connector in the control box. (Method "B") (80K Heat pump model only)**

⑤ **Connect the supplied cables to the connector in the control box(Method "C"). (LP-8091PC, LP-K Series)**

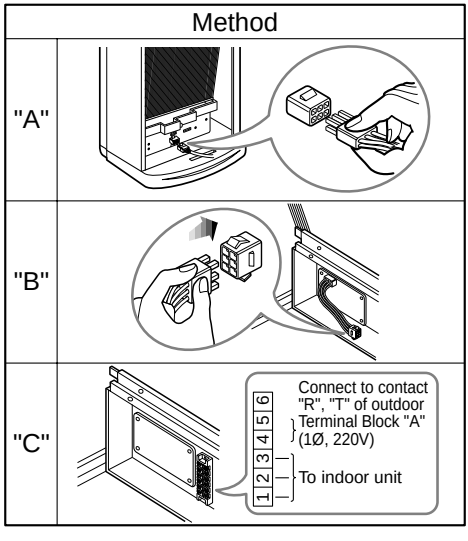

⑥ **Secure the control cover to the original position with the screw.**

⑦ **Close the inlet grille.**

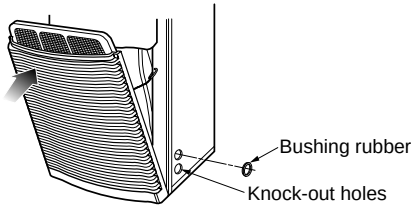

6. Connecting the Cable to tele-control unit(Optional)

※ Explain customers after installation.

- The first response is operated between auto-response and digital tele-control function.
- This is operated only after 8 times ringing, so not operated below 8 times ringing.
- You refers the detail description of digital tele-control function.
- In order to protect cable, it should be inserted “Bushing Rubber”.
- The inside and outside connecting cable can be connected after opening the inlet grille.

① **Open the inlet grille manually.**

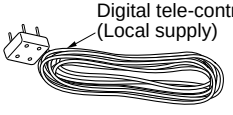

② **Open the control cover with Driver(⊕).**

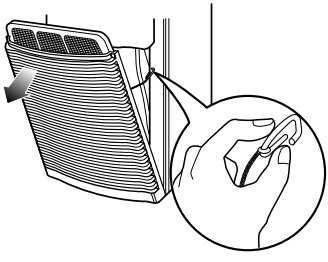

③ **Connect the digital tele-control cable to the connector in the control box. (Method "A") (20K, 30K, 40K Model Only)**

④ **Connect the digital tele-control cable to the connector beside to the control box. (Method "B") (50K Heat pump model only)**

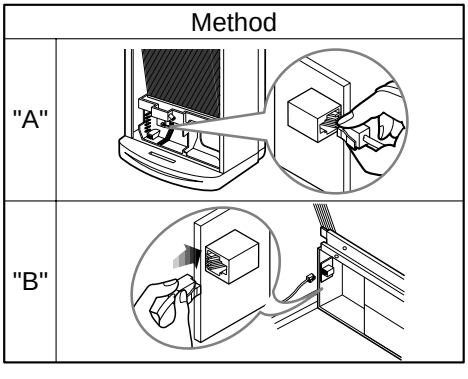

⑤ **Secure the control cover to the original position with the screw.**

⑥ **Close the inlet grille.**

⑦ **Connect the digital tele-control cable to the terminal and the phone cable to the digital tele-reservation cable.**

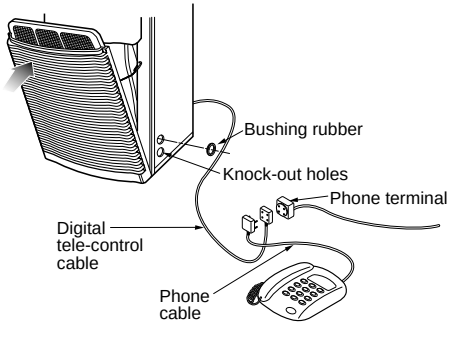

⚠ CAUTION

- Only use telephone cable. If use key phone, can't use this function.

7. Connecting Piping and the Cable to Outdoor Unit

1) Connecting pipings to the outdoor unit

① Align the center of the pipings and sufficiently tighten the flare nut with fingers.

② Finally tighten the flare nut with torque wrench until the wrench clicks.

- When tightening the flare nut with torque wrench, ensure the direction for tightening follows the arrow on the wrench.

PIPE SIZE	TORQUE
1/4"	1.8 Kg·m
3/8"	4.2 Kg·m
1/2"	5.5 Kg·m
5/8"	5.5 Kg·m
3/4"	6.5 Kg·m

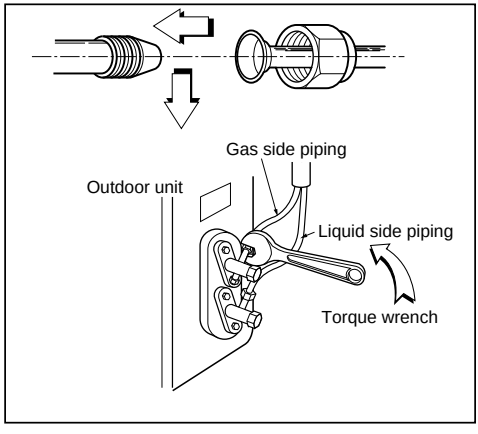

2) Connecting the cables to the outdoor unit

① Open the control board cover from the outdoor unit by removing the screws.

② Connect wires to the terminals on the control board individually and secure the cables onto the control board with clamp.

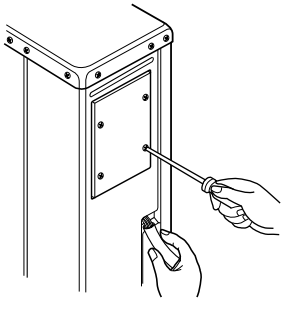

③ Secure the control board cover to the original position with the screws.

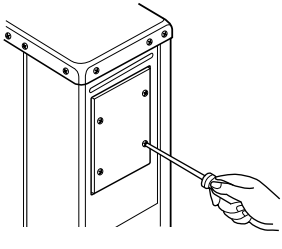

⚠ CAUTION

Perform grounding

- This product should be grounded.
- Defective grounding could cause an electric shock.

8. Power Supply and Wiring

The unit is completely wired internally at the factory according to general rule of electrical technology, but local rules, if they are required, should be complied with.

1) Power supply

Power source must fulfill the following conditions:

① **The working voltage should be higher than 90% and lower than 110% of the rated voltage marked on the name plate.**

② **The starting voltage should be higher than 85% of the rated voltage marked on the name plate.**

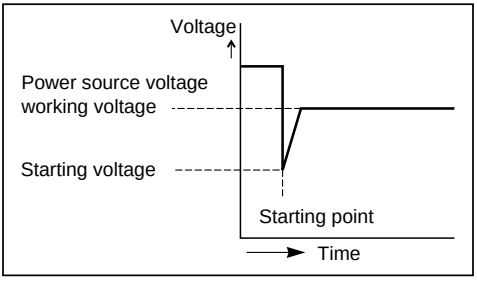

2) Wiring

After the confirmation of the above conditions, prepare the wiring as follows:

① **Use the power supply cord(Rubber insulation, type Ho7RNF approved by HAR or SAA) suitable for the product's electriccal capacity.**

UNIT		VOLTS	Conductor cross-sectional area
20K/28K/ 30K/40K	H/P	450/750V	2.5mm²
	C/O	450/750V	2.5mm²
50K	H/P	450/750V	4.0mm²
	C/O	450/750V	4.0mm²
80K	H/P	450/750V	5.5mm²
	C/O	450/750V	5.5mm²

② **Provide a recognized circuit breaker as below between power source and unit.**
A disconnection device to adequately disconnect all supply lines must be fitted. (for service operations)

UNIT		Circuit breaker capacity
20K/28K/ 30K/40K	H/P	30A
	C/O	30A
50K	H/P	40A
	C/O	40A
80K	H/P	50A
	C/O	50A

③ **The screws which fasten the wiring in the casing of electrical fittings are liable to come loose from vibrations to which the unit is subjected during the course of transportation. Check them and make sure that they are all tightly fastened.**
(If they are loose, it could give rise to burn-out of the wires.)

④ **See to it that the starting voltage is maintained at more than 90 percent of the rated voltage marked on the name plate.**

⑤ **The following troubles would be caused by voltage drop-down.**
Vibration of a magnetic switch, damage on the contact point there of, fuse breaking, disturbance to the normal function of a overload protection device.

ENGLISH

9. Vacuum Drying of the Connecting Pipes and the Indoor Unit

The air which contains moisture remaining in the refrigeration cycle may cause a malfunction on the compressor.

1. Confirm that both the liquid side valve and the gas side valve are set to the closed position.
2. After connecting the piping, check the joints for gas leakage with gas leak detector.
3. Remove the service port nut, and connect the gauge manifold and the vacuum pump to the service port by the charge hose.
4. Vacuum the indoor unit and the connecting pipes until the pressure in them lowers to below -76cmHg.
5. Remove the valve stem nuts, and fully open the stems of the 2-way and 3-way valves with a hexagon wrench.
6. Tighten the valve stem nuts of the 2-way valve and 3-way valve.
7. Disconnect the charge hose and fit the nut to the service port.
   (Tightening torque: 1.8kg.m)

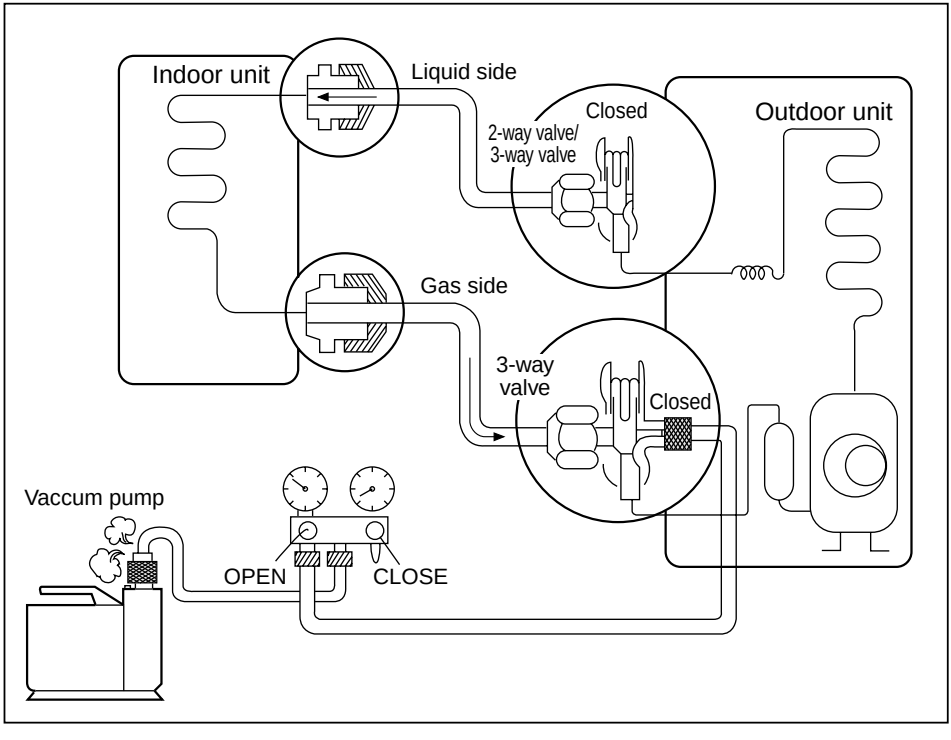

10. Checking the Drainage and Form the Piping

1) Checking the Drainage

① **Remove the inlet grille with your hands as shown (right and left) and pull in the direction indicated by the arrow.**

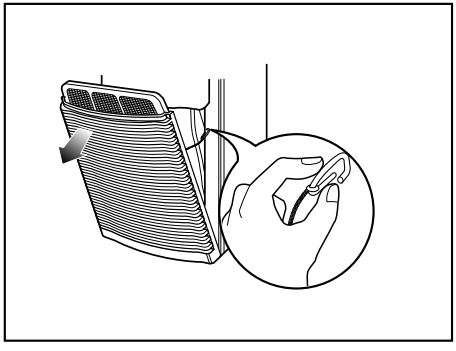

② **Check the drainage**

- Pour a glass of water into the drain pan.
- Ensure if water flows drain hose of indoor unit.

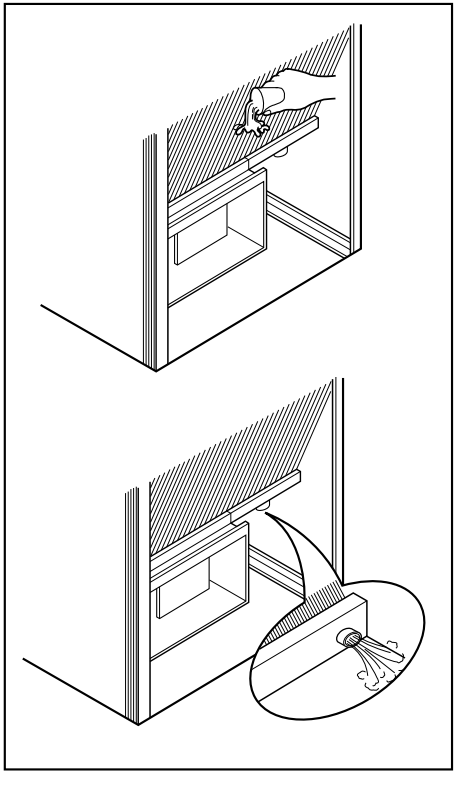

2) Form the Piping

① **Wrap the connecting portion of indoor unit with the insulation material and secure it with two Plastic Bands. (for the right piping)**

- If you connect an additional drain hose, the end of the drain-outlet should be kept distance from the ground. (Do not dip it into water, and fix it on the wall to avoid swinging in the wind.)

In case of the outdoor unit is installed below position of the indoor unit.

② **Tape the Piping, and Connecting Cable from down to up.**

③ **Form the piping gathered by taping along the exterior wall and fix it onto the wall by saddle or equivalent.**

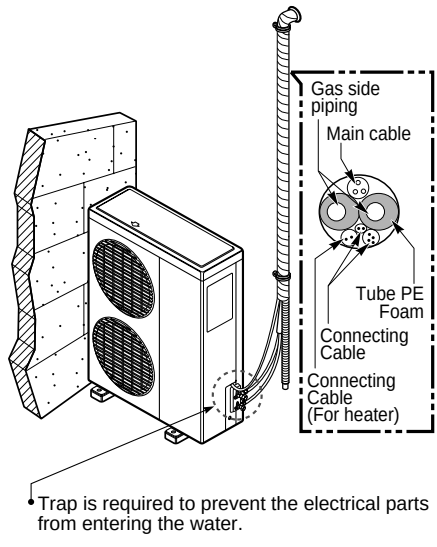

In case of the outdoor unit is installed upper position of the indoor unit.

① **Tape the piping and connecting cable from down to up.**

② **In order to prevent water from entering the room, form a trap and tape the piping.**

③ **Fix the piping onto the wall with saddle or bracket.**

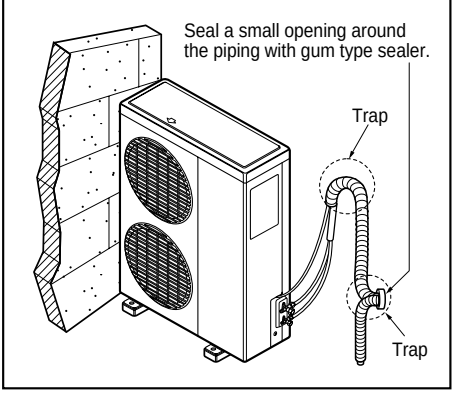

Drain water treatment of outdoor unit(Heat Pump Only)

① **When using the drain elbow hose, use a mount of 3cm of higher.**

② **In the cold district (0°c continued for 2~3 day), the drain water is frozen and the fan fail to function, do not use the drain elbow.**

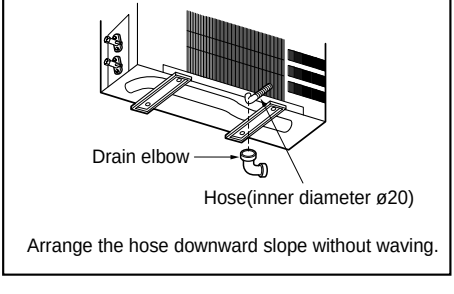

11. Final Check and Test Run

ENGLISH

After installing the unit, perform the final check and running test as follows:
Final check points

① **Is the unit securely mounted?**

② **Is the installation location adequate?**

③ **Is the water piping work adequately and without leakage?**

④ **Are trapped drain lines installed at condensate drain connections?**

⑤ **Has the refrigeration cooling cycle been kept sealed?**

⑥ **Is the electrical wiring adequate and are the screws tightened on terminals?**

After the above final checkings, prepare the running test as follows:

① **Connect compound gauges to the check joints at discharge and suction sides of the compressor.**

② **Turn all switches "OFF".**

③ **Turn the main switch "ON".**

Running test should be accomplished as follows:

① **Set operation switch at "FAN" and the fan will start. Check to ensure that the fan sounds normal.**

② **Next, set it at "COOL" and the compressor will start. Check to ensure that the compressor sounds normal.**

③ **Check discharge and suction pressure on the compound gauges.**

④ **Check working voltage, phase balance and running current.**

⑤ **Check to ensure that the thermistor functions properly.**

⑥ **Check to ensure that the high pressure control switch functions correctly.**

The Method of Duct Installation (Only 80K Model)

1. First of all, turn ON Duct switch of Main PCB.

2. After removing upper side chamber, connect the duct to the barrier blower directly.

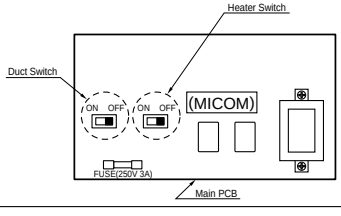

CORRECT INSTALLATION

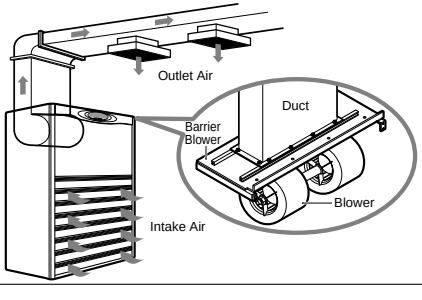

MEMO