DUCTED(CENTRAL) SPLIT TYPE AIR CONDITIONERS INSTALLATION INSTRUCTIONS

- Please read this instruction sheet completely before installing the product.
- When the power supply location is wanted to replace, replacement work shall be performed by authorized personnel only.
- Installation work must be performed in accordance with national wiring standards by authorized personnel only.

Indoor Unit

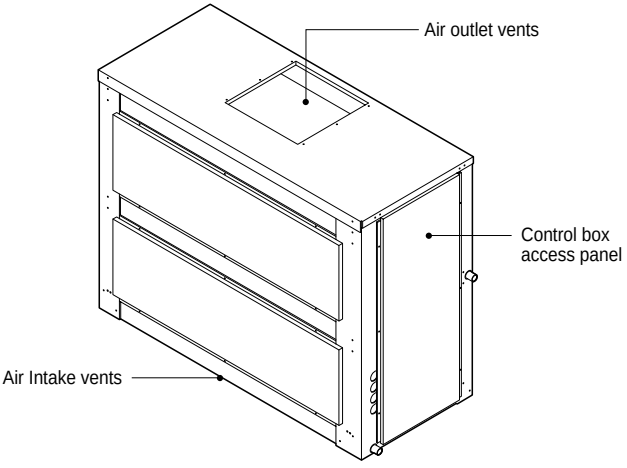

Outdoor Unit

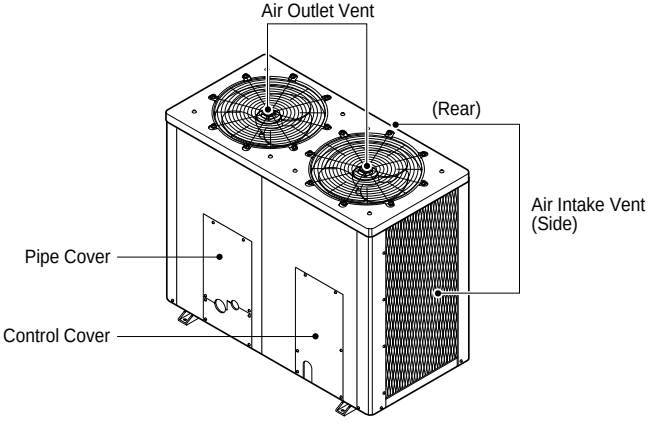

P/No.: 3828A20124A

TABLE OF CONTENTS

1.The following should be always observed for safety.....3

2. Installation of Indoor, Outdoor Unit 4

3. Dimensional Data 5

4. One Unit-4 Applications 6

5. Ductwork 7

6. Condensate Drain Piping 7

7. Piping of Indoor Unit 8

8. Connecting Piping to Outdoor Unit 9

9. Connecting the Cable 9

10. Installation of Remote Controller 12

11. Electrical Wiring 13

12. Control Wiring 15

13. Test Mode Precedure 16

14. Trial Run Mode 17

15. Evaporator Fan Adjustment 18

16. Start-up Pre-start Quick Check List 19

17. Final Installstion Check List and Maintenance 20

1. The following should be always observed for safety

- Please report to or take consent by the supply authority before connecting to the system.
- Be sure to read "THE FOLLOWING SHOULD BE ALWAYS OBSERVED FOR SAFETY" before installing the air conditioner.
- Be sure to observe the cautions specified here as they include important items related to safety.
- The indications and meanings are as follows.

⚠ **WARNING**	Could lead to death, serious injury, etc.
⚠ **CAUTION**	Could lead to serious injury in particular environments when operated incorrectly.

- After reading this manual, be sure to keep it together with the instruction manual in a handy place .

⚠ WARNING

Do not install it yourself (customer).

- Incomplete installation could cause injury due to fire, electric shock, the unit falling or a leakage of water. Consult the dealer from whom you purchased the unit or special installer.

Perform the installation securely referring to the installation manual.

- Incomplete installation could cause a personal injury due to fire, electric shock, the unit falling or a leakage of water.

Install the unit securely in a place which can bear the weight of the unit.

- When installed in an insufficient strong place, the unit could fall causing injured.

Perform electrical work according to the installation manual and be sure to use an exclusive circuit.

- If the capacity of the power circuit is insufficient or there is incomplete electrical work, it could result in a fire or an electric shock.

Use the specified wires to connect the indoor and the outdoor units securely and attach the wires firmly to the terminal board connecting sections so the stress of the wires is not applied to the sections.

- Incomplete connecting and fixing could cause fire.

Attach the electrical part cover to the indoor unit and the service panel to the outdoor unit securely.

- If the electrical part cover if the indoor unit and/or the service panel if the outdoor unit are not attached securely, it could result in a fire or electric shock due to dust, water, etc.

Check that the refrigerant gas do not leak after installation is completed.

Be sure to use the part provided or specified parts for the installation work.

- The use of defective parts could cause an injury or leakage of water due to a fire, electric shock, the unit falling, etc.

⚠ CAUTION

Perform the drainage/piping work securely according to the installation manual.

- If there is a defect in the drainage/piping work, water could drop from the unit and household goods could be wet and damaged.

Do not install the unit in a place where an inflammable gas leaks.

- If gas leaks and accumulates in the area surrounding the unit, it could cause an explosion.

2. Installation of Indoor, Outdoor Unit

1. Inspection

1) Check for damage after unit is unloaded. Report promptly, to the carrier, any damage found to unit. Do not drop unit.
2) Check the unit nameplate to determine if the unit voltage is correct for the application. Determine if adequate electrical power is available. Refer to the application specifications.
3) Check to be sure the refrigerant charge has been retained during shipment.

2. Selection of the best location

1) Indoor unit

Install the air conditioner in the location that satisfies the following conditions.

- The place shall easily bear a load exceeding four times the indoor unit's weight.
- The place shall be able to inspect the unit as the figure.
- The place where the unit shall be leveled.
- The place shall allow easy water drainage.
- The place shall easily connect with the outdoor unit.
- The place where the unit is not affected by an electrical noise.
- The place where air circulation in the room will be good .
- There should not be any heat source or steam near the unit.

※ Suggested airflow clearances and service clearances are given in. **(Fig. 1)**

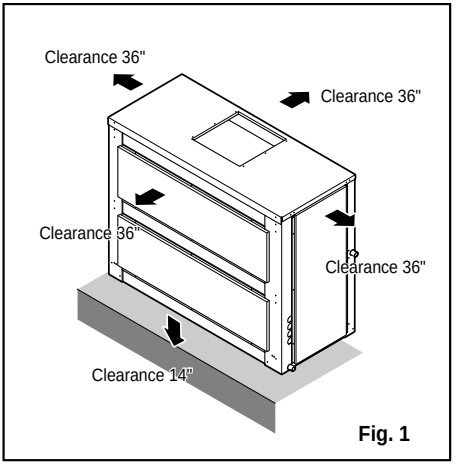

Fig. 1

2) Outdoor unit

- If an awning is built over the unit to prevent direct sunlight or rain exposure, be careful that heat radiation from the condenser is not restricted.
- There should not be any animals or plants which could be affected by hot air discharged.
- Ensure the spaces indicated by arrows from the wall, ceiling, fence or other obstacles.

※ Suggested airflow clearances and service clearances are given in.**(Fig. 2)**

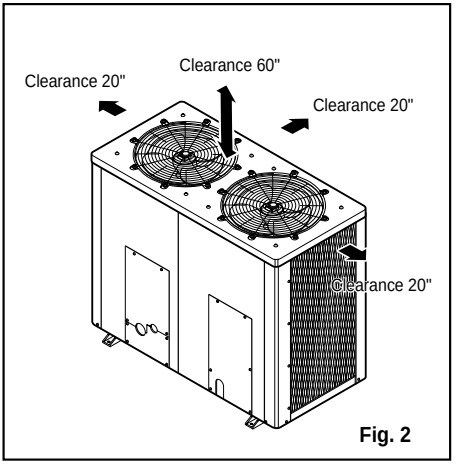

Fig. 2

3) Piping length and the elevation

Model	Pipe Size (Diameter: Ø)		Length A(m)		Elevation B(m)		* Additional refrigerant
	Gas	Liquid	Standard	Max.	Standard	Max.	(g/m)
LN-08B0CC	1"	5/8"	7.5	50	7.5	30	80
LN-0880CC	1"	1/2"	7.5	50	7.5	30	80
LN-10B0CC	3/4"	1/2"	7.5	50	7.5	30	80
LN-1080CC	3/4"	1/2"	7.5	50	7.5	30	80
LN-13B0CC	3/4"	1/2"	7.5	50	7.5	30	80
LN-1380CC	3/4"	1/2"	7.5	50	7.5	30	80
LN-15B0CC	1"	5/8"	7.5	50	7.5	30	80
LN-1580CC	1"	1/2"	7.5	50	7.5	30	80

• Capacity is based on standard length and maximun allowance length is on the basis of reliability.

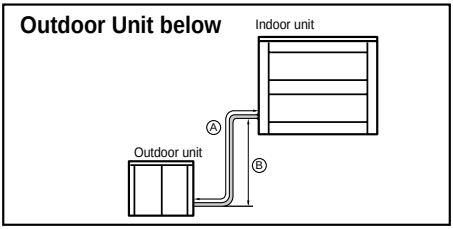

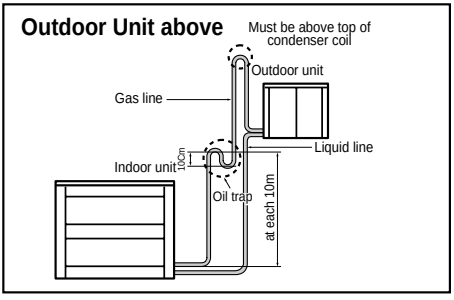

3. Dimensional Data

1. Indoor unit

Unit Dimensions Unit: inch(mm)

MODEL	LN-08B0CC LN-0880CC	LN-10B0CC LN-1080CC	LN-13B0CC/15B0CC LN-1380CC/1580CC
A	49.6 (1,260)	49.6 (1,260)	49.6 (1,260)
B	25.0 (635)	25.0 (635)	25.0 (635)
C	44.1 (1,120)	44.1 (1,120)	44.1 (1,120)
D	14.2 (361.6)	13.4 (341)	9.8 (248)
E	14.0 (356.4)	14.8 (377)	18.5 (470)
F	13.4 (340.3)	15.7 (398)	15.7 (398)
G	10.8 (274.1)	8.5 (216.4)	8.5 (216.4)
H	23.3 (593)	23.3 (593)	23.3 (593)
I	2.0 (50)	2.0 (50)	2.0 (50)
J	7.1 (180)	7.1 (180)	7.1 (180)
K	7.9 (200)	7.9 (200)	7.9 (200)
L	0.9 (24)	0.9 (24)	0.9 (24)
M	2.0 (51)	2.0 (51)	2.0 (51)
N	22.1 (561.8)	22.1 (561.8)	22.1 (561.8)
O	3.9 (100)	3.9 (100)	3.9 (100)
P	35.4 (900)	35.4 (900)	35.4 (900)
Q	1.6 (40)	1.6 (40)	1.6 (40)

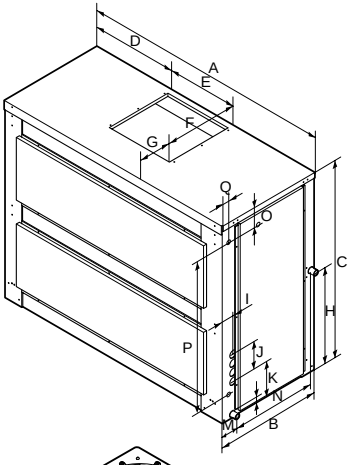

2. Outdoor unit

LN-13B0CC/LN-1380CC/LN-15B0CC
LN-1580CC/LN-20B0CC/LN-2080CC

• Each model of these six models (LN-13B0CC/LN-1380CC/LN-15B0CC/ LN-1580CC/LN-20B0CC/LN-2080CC) is operated with the doubled of the right outdoor unit.

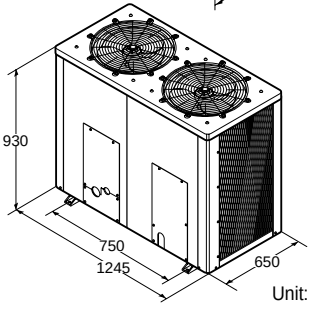

Unit: inch(mm)

4. One Unit -4 Applicalions

1. Type of applications

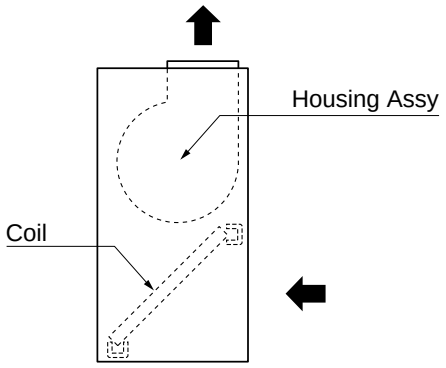

Vertical
(Horizontal Return)

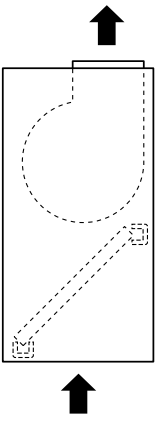

Vertical
(Vertical Return)

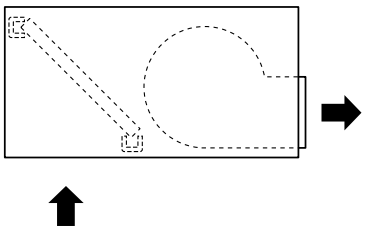

Horizontal
(Vertical Return)

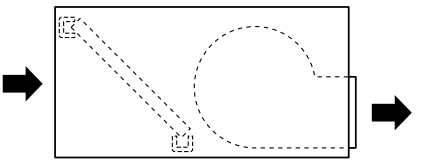

Horizontal
(Horizontal Return)

5. Ductwork

Connections to the unit should be made with three-inch canvas connectors to minimize noise and vibration transmission.

Elbows with turning vanes or splitters are recommended to minimize air noise and resistance.

The first elbow in the ductwork leaving the unit should be no closer than three times blower diameter to avoid turbulence and back pressure.

6. Condensate Drain Piping

A 1 inch male condensate drain connection is located on the corner of the unit next to the evaporator section access panel. A trap should be installed and filled with water before starting the unit to avoid air from being drawn through. Follow local cdes and standard piping practices when running the drain line. Pitch the line downward, away from the unit, and avoid long horizontal runs. See Fig. 1.

Do not use reducing fittings in the drain lines.
The condensate drain must be:

1. Made of 1" pipe size.
2. Pitched 1/4" per foot to provide free drainage to convenient drain system.
3. Trapped
4. Must not be connected to closed drain system.

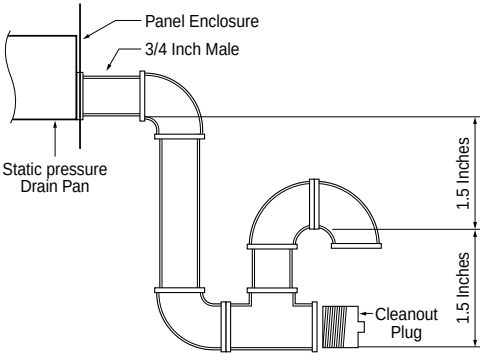

Fig. 1

7. Piping of Indoor Unit

1. Preparation of piping

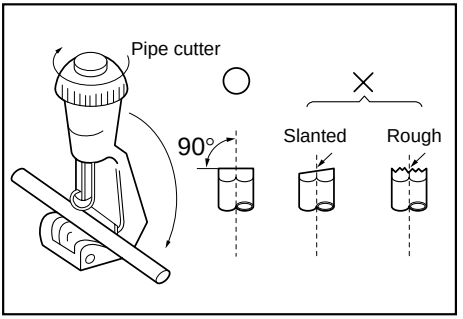

1) **Cut the pipes and the cable**
- Use the accessory piping kit or the pipes purchased locally.
- Measure the distance between the indoor and the outdoor unit.
- Cut the pipes a little longer than measured distance.
- Cut the cable 1.5m longer than the pipe length.

2) Remove burrs.
- Remove burrs from cut edges of pipes.
- Turn the pipe end down to avoid the metal powder entering the pipe.

Caution:

If burrs are not removed, they may cause a gas leakage.

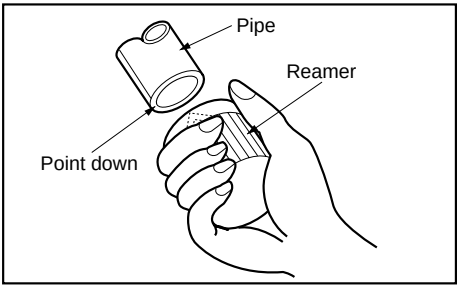

2. Connection of piping

1) Move the indoor tubing and drain hose to the hole
- Remove tubing holder and pull the tubing out of the chassis.

2) Replace the tubing holder into original position

3) Route the tubing and the drain hose staight backwards.

4) Insert the connecting cable into the indoor unit through the hole.
- Do not connect the cable to the indoor unit
- Make a small loop with the cable for easy connection later.

5) Tape the tubing and the connecting cable.

6) Indoor unit installation.

7) Connecting the pipings to the indoor unit.
- Align the center of the pipings and suffciently tighten the flare nut with fingers.
- Finally, tighten the flare nut with troque wrench until the wrench clicks.
  When tightening the flare nut with troque wrench, ensure the direction for tightening follows the arrow on the wrench.

3. Precautions in bending

1) If it is necessary to bend or stretch the tubing, use the spring which is attached to the tubing in stead of pipe bender.

- Please make a careful notice to make a smooth line.
- Hold the tubing with your two hands closely and then bend or stretch it slowly not to make any crack.
- Remember that the radius (R) should not exceed 70mm (Refer to Fig. 1)

2) Do not repeat the bending process to prevent the tubing from cracking or crushing.

3) Keep in mind that the bending part should not be cracked and make the radius (R) as long as possible (Refer to Fig. 2)

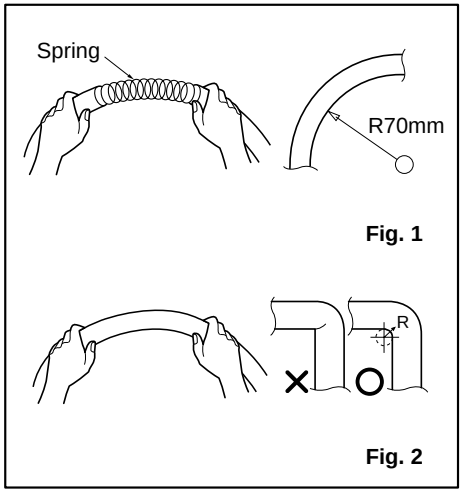

8. Connecting Piping to Outdoor Unit

1. Connecting pipings to the outdoor unit

1) Upon connecting 4-way valves, please weld connecting pipes using elbows instead of connecting pipes with flare nuts.

9. Connecting the Cable

1. Open the control board cover from the outdoor unit by removing the screws.

2. Connect wires to the terminals on the control board individually and secure the cables onto the control board with clamp.

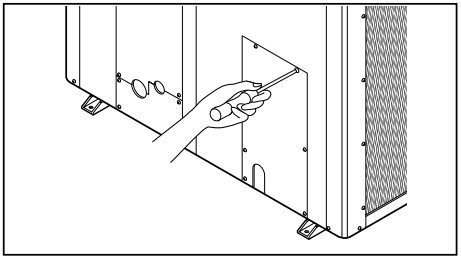

CAUTION

After the confirmation of the above conditions, prepare the wiring as follows:

1) Never fail to have an individual power specialized for the air conditioner. As for the method of wiring, be guided by the circuit diagram pasted on the inside of control box cover.

2) Provide a circuit breaker switch between power source and the unit.

3) The screw which fasten the wiring in the casing of electrical fittings are liable to come loose from vibrations to which the unit is subjected during the course of transportation. Check them and make sure that they are all tightly fastened. (If they are loose, it could give rise to burn-out of the wires.)

4) Specification of power source

5) Confirm that electrical capacity is sufficient.

6) Be sure that the starting voltage is maintained at more than 90 percent of the rated voltage marked on the name plate.

7) Confirm that the cable thickness is as specified in the power sources specification.
(Particularly note the relation between cable length and thickness.)

8) Never fail to equip a leakage breaker where it is wet or moist.

9) The following troubles would be caused by voltage drop-down.

- Vibration of a magnetic switch, damage on the contact point there of, fuse breaking, disturbance to the normal function of a overload protection device.
- Proper starting power is not given to the compressor.

3. Form the Piping

1) Wrap the connecting portion of indoor unit with the insulation material and secure it with two Plastic Bands. (for the right piping)

• If you connect an additional drain hose, the end of the drain-outlet should be kept distance from the ground. (Do not dip it into water, and fix it on the wall to avoid swinging in the wind.)

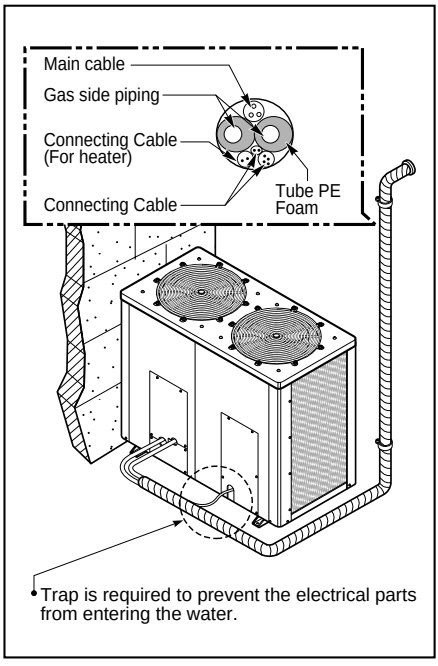

In case of the outdoor unit is installed below position of the indoor unit.

2) Tape the Piping, and Connecting Cable from down to up.
Form the piping gathered by taping along the exterior wall and fix it onto the wall by saddle or equivalent.

In case of the outdoor unit is installed upper position of the indoor unit.

3) Tape the piping and connecting cable from down to up.
In order to prevent water from entering the room, form a trap and tape the piping. Fix the piping onto the wall with saddle or bracket.

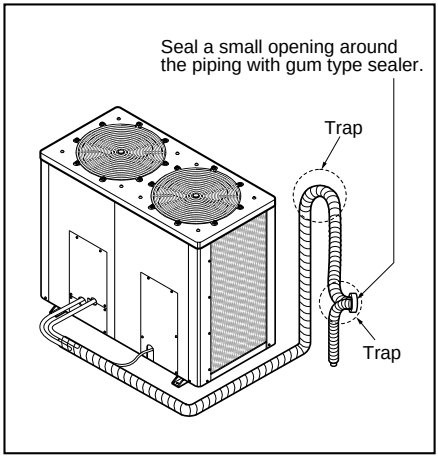

10. Installation of Remote Controller

• Install the remote control box and cord correctly.

POINT OF REMOTE CONTROLLER INSTALLATION

• Although the room temperature sensor is in the indoor unit, the remote control box should be installed in such places away from direct sunlight and high humidity.

INSTALLATION OF THE REMOTE CONTROL BOX

- Select places that is not splashed by water.
- Select control position after receiving customer approval.
- The room temperature sensor of the thermostat for temperature control is built in the indoor unit.
- This remote controller equipped with liquid crystal display. If this position is higher or lower, display is difficult to see. (The standard height is 1.2~1.5m high)

ROUTING OF THE REMOTE CONTROL CORD

- Keep the remote control cord away from the refrigerant piping and the drain piping.
- To protect the remote control cord from electrical noise, place the cord at least 5cm away from other power cables. (Audio equipment, Television set, etc)
- If the remote control cord is secured to a wall, provide a trap at the top of the cord to prevent water droplets from running.

ELECTRICAL WIRING TO THE INDOOR UNIT

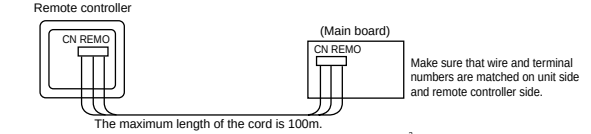

DISASSEMBLING OF THE REMOTE CONTROLLER

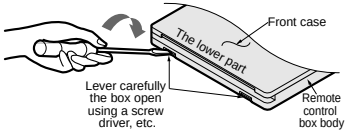

WHEN THE REMOTE CONTROL BOX IS INSTALLED WITH THE CORD BURIED.

PROCEDURE OF INSTALLATION

1. Fix the under plate on the switch box by screws(Local supply). In this case, fit the under plate on the wall, and be careful of deformation.
2. Receive the remote control cord in the switch box.
3. Hook the remote control unit on the under plate.

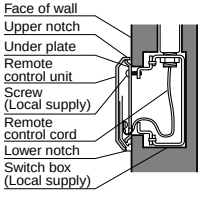

WHEN THE REMOTE CONTROL BOX IS INSTALLED WITH THE CORD EXPOSED.

PROCEDURE OF INSTALLATION

1. Fix the under plate on the wall by self tapping screws (accessory).
2. Make a slit (Part A) at the top side of the remote control box by nipper.
3. Rout the cord as shown in the following figure. In this case, push the cord into the around of case(Part B).
4. Hook the remote control unit on the under plate.

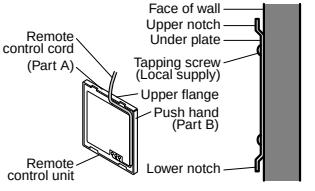

FIXING OF REMOTE CONTROL CORD

1. Fix the cord clamps on the wall by ø3 tapping screws(Local supply).
2. Fix the remote control cord.

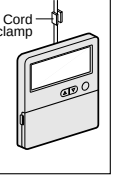

11. Electrical Wiring

- All wiring must comply with local requirements.
- Select a power source that is capable of supplying the current required by the air conditioner.
- Use a recognized circuit breaker between the power source and the unit. A disconnection device to adequately disconnect all supply lines must be fitted.
- Capacity of circuit breaker
  - Refer to the label quality of each model.

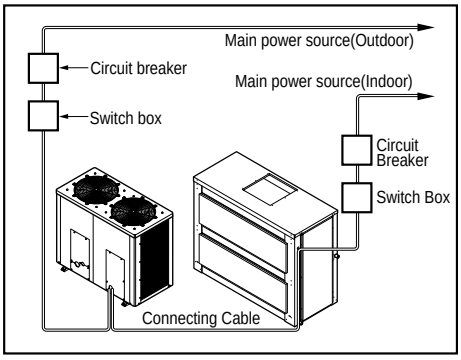

■ Connect the wires to the terminals on the control board individually according to the outdoor unit connection.
- Ensure that the color of the wires of outdoor unit and the terminal No. are the same as those of indoor unit respectively

- Connecting cable

Terminals on the indoor unit	1	2	3	4	⏚	
Terminals on the outdoor unit	1	2	3	4	⏚	6

CAUTION

The Main cable connected to the outdoor unit should be complied with the following specifications (Rubber insulation, type H05RN-F approved by HAR or SAA).

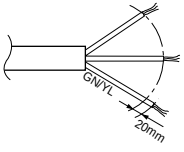

The connecting cable connected to the indoor and outdoor unit should be complied with the following specifications (Rubber insulation, type H05RN-F approved by HAR or SAA).

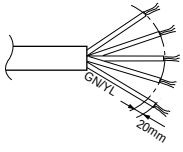

NORMAL CROSS-SECTIONAL AREA 0.75mm²

If the supply cord is damaged, it must be replaced by a special cord or assembly availible from the manufacturer of its service agent.

⚠ WARNING

Make sure that the screws of the terminal are free from looseness.

(Note)

- Keep all wires away from the refrigerant pipe.
- To protect the control cord from electrical noise, place DC wires at least 0.2 inch away from AC wires.
- Following diagram is the example of wiring arrangement.

1) Connecting Cable to the Indoor Unit

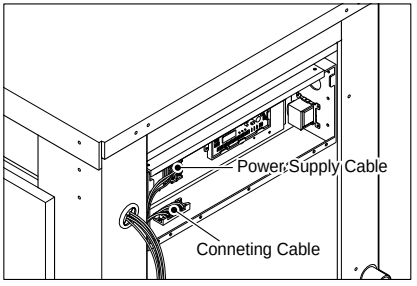

2) Connecting Cable to the Outdoor Unit

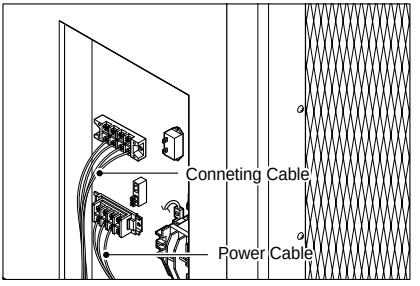

Typical Field wiring Diagram (Fig. 1)
Low Voltage Field Wiring (Fig. 1)
(For three phase electricity product)

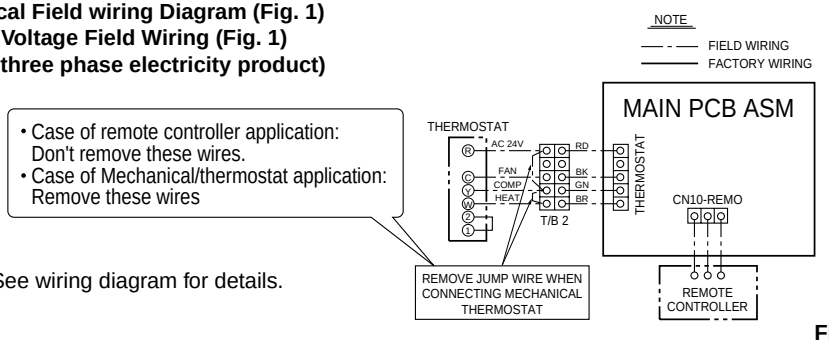

- See wiring diagram for details.

Fig. 1

Note

The anticipator in the thermostat shall be removed, if a unit which has micro control function is controlled by thermostat with anticipator.

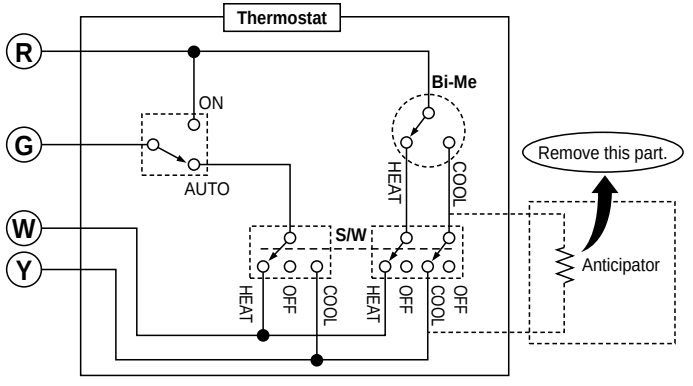

12. Control Wiring

Remote controller conductors are standard thermostat wire 22 to 14 ga.

Recommended wire sizes and lengths for installing the remote controller are provided in the table on page 12. Resistance of 2 1/2 ohms per conductor can cause deviation in the accuracy of the control.

Field Installed DC Control Wiring

Before installing the connecting wiring between the components utilizing a DC analog output/input signal and the unit, refer to the following table for conductor sizing guidelines and;

1) Use standard copper conductor thermostat wire unless otherwise specified.
2) Ensure that the wiring between the controls and the unit's termination point does not exceed two and a half (2 1/2) ohms/conductor for the length of the run.
3) Refer to Figure 5 for the electrical access locations provided on the unit.
4) Do not run the electrical wires transporting Sensor DC signals in or around AC wires.

Note: Resistance in excess of 2.5 ohms per conductor can cause deviations in the accuracy of the controls

DC Conductors

Distance from Unit to Control	Recommended Wire Size	Remark
000 - 150 feet	22 gauge	Shielded wire recommended
151 - 240 feet	20 gauge	
241 - 385 feet	18 gauge	
386 - 610 feet	16 gauge	
611 - 970 feet	14 gauge	

Mark connections as shown in the following wiring diagram for the applicable remote controller.

Emergency Shut Down

For Emergency Shut Down, remove the jumper between 1 and 2 and install normally closed contacts (Open at Fault Condition). Immediate shut down will occur and the MAIN CONTROLLER will be disabled.

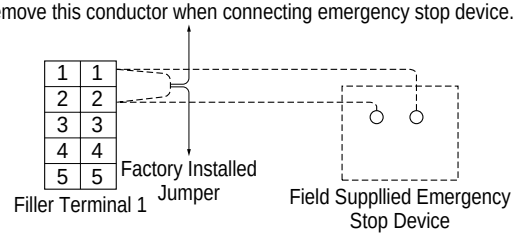

Note: To stop unit operation in case of fire, remove the jumper between terminals 1 and 2. Refer to the unit wiring diagram.

Important: After completion of wiring, check all electrical connections, including factory wiring within the unit, and ensure all connections are tight. Replace and secure all electrical box covers and access doors before leaving unit or connecting power to circuit supplying unit.

13. Test Mode Procedure

Operating the unit from the roof using the test mode.

⚠ WARNING

When operating the unit the test mode, the evaporator access panel and the control box cover, must be closed. Failure to ensure that the evaporator access panel and control box cover is in place could resuit in severe personal injury or death.

Step test Mode

The step test mode is initiated by pressing test key(tact switch located on MAIN CONTROLLER).
When the test mode is initiated, the system will begin the first test step, and turn on the indoor fan. (See test mode table.)

To continue to the next step, repress the test key.
As you repeat to press the Test key, the unit will move through the steps according to the tabel.

The Test Mode is performed only when the unit is in "STOP" state.
Any operating signal from remote controller or thermostat can interrupt "Test Mode" and operate the unit to the signal.

To quit Test Mode, cycle the unit power at the unit disconnect, or repeat to press the Test key until the unit stop.

Test Key Location

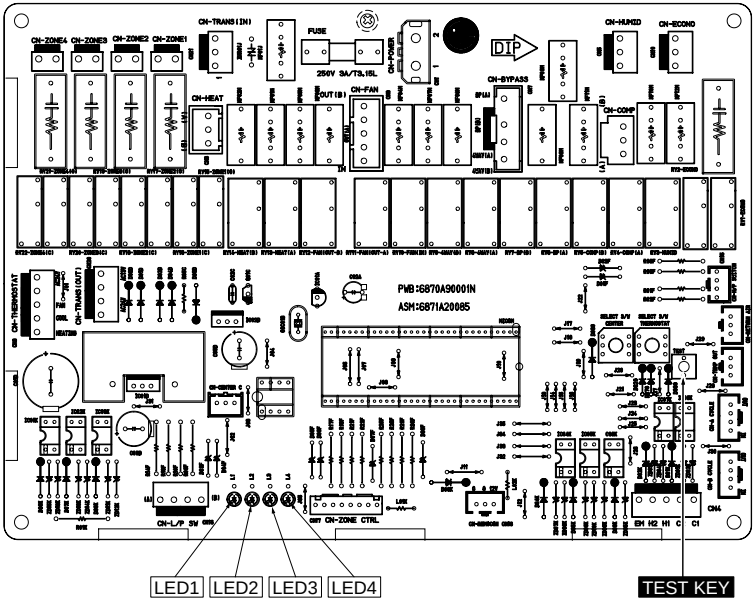

Test Mode Table 1

STEP	INDOOR FAN	*OUTDOOR FAN 1	*OUTDOOR FAN 2	COMP 1	* COMP 2	* HEATER 1	* HEATER 2	* HUMIDIFIER	LED 1	LED 2	LED 3	LED 4
1	O	X	X	X	X	X	X	X	O	X	X	X
2	O	O	X	X	X	X	X	X	X	O	X	X
3	O	O	O	X	X	X	X	X	O	O	X	X
4	O	O	O	O	X	X	X	X	X	X	O	X
5	O	O	O	O	O	X	X	X	O	X	O	X
6	O	X	X	X	X	O	X	X	X	O	O	X
7	O	X	X	X	X	O	O	X	O	O	O	X
8	O	X	X	X	X	O	O	O	X	X	X	O
9	X	X	X	X	X	X	X	X	X	X	X	X

(Note)

1. " ∗ " mark means that the function depends on unit model. In case the unit doesn't have that function or options, you can move on to next test step by pressing TEST KEY again.
2. Test mode is finished after pressing TEST KEY 9 times and then you can control with remote controller.
3. One more pressing of TEST KEY after pressing 9 times return test mode to step 1. (NOTICE)

14. Trial Run Mode

Operating the unit in the room without concerning about set temperature.

Pressing simultaneously 'Room Temperature checking Button' and 'Timer Set Down Button' for 3 seconds ignores room temperature setting and operates the unit in cooling mode for 18 minutes and stop.
To quit 'Trial Run Mode', press 'Set Temperature Button'. If 'Operation Mode Selection Button' is pressed, dehumidification function is performed, and pressing 'Operation Mode Selection Button' once more returns to cooling mode.

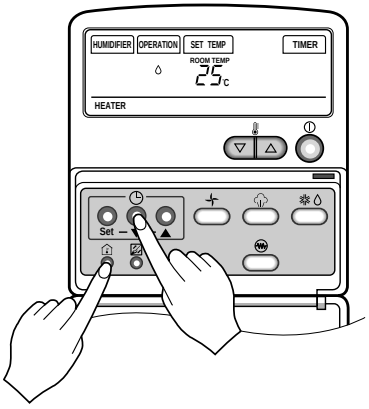

15. Evaporator Fan Adjustment

Use the following procedure to determine the proper adjustment of the evaporator fan for a specific application.

1. Determine total system external static pressure (in inches water column) with accessories installed. to accomplish this:
   1) Obtain the design airflow rate and the design external static pressure drop through the distribution system. Your sales representative or the design engineer can provide you with these values.
   2) Using the table from unit Service Manual, add static pressure drop of the accessories installed on the unit.
   3) Add the total accessory static pressure drop (from step 1b) to the design external static pressure. The sum of these two values is the total system external static pressure.
2. Use the table(s) in the Service Manual to find the external static pressure (in inches water column) that most closely approximates total system external static pressure. Then locate the appropriate airflow rate (on cfm) for your unit. The value obtained represents the break horsepower for the evaporator fan motor and the fan RPM.

Important: Fan Break Horsepower (BHP) listed in the Table is the percentage range of nameplate amperage the motors will safely work within, before an oversized motor is required.

On the below 5.0RT model indoor fan motor is shipped to operate in High speed cooling and heating. It can be rewired to operate in Low or super Hi speed cooling and heating. See wiring diagram in the unit how to rewire.

On the above 6.25KT models, the indoor fan speed is changed by opening or closing the adjustable motor sheave. See Figure 8.

To Increase CFM

Loosen the pulley adjustment set screw and turn sheave clockwise.

To Decrease CFM

Loosen the pulley adjustment set screw and turn sheave counterclockwise.

Note: The actual external static pressure may varies from design ESP due to actual duct work installation.
The required air flow should be respected to provide the design cooling capacity.

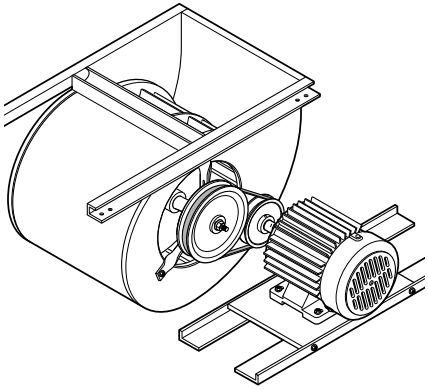

To Increase Belt Tension

- **7.5RT ~ 15RT**
  1) Loosen adjustment bolt, nut(3 places).
  2) Pull motor to arrow direction until belt is tight.
  3) Tighten adjustment bolt, nut after belt has correct tension.

FORCE(F)	HEIGHT	REMARK
9~11 lbf	0.8 ~ 1.2(inch)	-

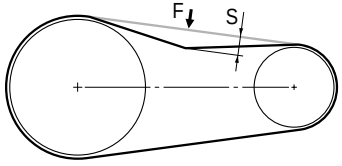

16. Start-Up Pre-Start Quick Check List

- Is unit level and located with proper clearances?
- Is the duct work correctly sized, run, taped, insulated and weather proofed with proper unit arrangement?
- Is condensate line properly sized, run trapped and pitched?
- Is the filter of the correct size, clean and in place?
- Is the wiring properly sized and run in according to the unit wiring diagram?
- Are all wiring connections tight including those in unit and compressor electrical boxes?
- Has the unit been properly grounded and fused with the recommended fuse size?
- Have the air conditioning systems been checked at the service ports for charge and leak tested if necessary?
- Does the condenser fan and indoor fan turn freely without rubbing and are they tight on the shafts?
- Visually inspect the unit to ensure that the airflow required for the condenser coil is not obstructed from the unit.
- Inspect the control panel wiring to verify that all electrical connections are tight, and that wire insulation is intact.
- Has the indoor fan speed been determined and the proper speed been set?
- Has all work been done in accordance with applicable local and national codes?
- Are all covers and access panels in place to prevent air loss and safety hazards?

⚠ WARNING

Bodily injury can result from high voltage electrical components. If operating checks must be performed with the unit operating, it is the technician's responsibility to recognize these hazards and proceed safely. Failure to do so could result in severe personal injury or death due to electrical shock or contact with moving parts.

17. Final Installation Checklist and Maintenance

- Is the condenser fan and indoor blower operating correctly, with proper rotation and without undue noise?
- Are the compressors operating correctly and has the system been checked with a charging chart?
- Have voltage and running currents been checked to determine if it is within limits?
- Have the air discharge grilles been adjusted to balance the system?
- Has the ductwork been checked for air leaks and condensation?
- Has the indoor airflow been checked and adjusted if necessary?
- Has the unit been checked for tubing and sheet metal rattles and are there unusual noises to be checked?
- Are all covers and panels in place and properly fastened?
- Has the owner or maintenance personnel been given this manual, warranty, and been instructed on proper operation and maintenance?

Routine Maintenance By Owner

You can do some of the periodic maintenance functions for your unit yourself; this includes cleaning air filters, cleaning unit cabinet, cleaning the condenser coil, and conducting a general unit inspection on a regular basis.

⚠ WARNING

Before removing access panels to service unit, disconnect power supply. Failure to disconnect power before attempting any servicing can result in severe injury or death.

Air Filters

It is very important to keep the central duct system air filters clean. Be sure to inspect them at least once each month when the system is in constant operation. (In new buildings, check the filters every week for the first 4 weeks.)

Permanent type filters can be cleaned by washing with a mild detergent and water. Ensure that the filters are thoroughly dry before reinstalling them in the unit (or duct system).

Condenser coil

Unfiltered air circulates through the unit's condenser coil and can cause the coil's surface to become clogged with dust, dirt, etc.. To clean the coil, vertically (i.e., along the fins) stroke the coil surface with a soft bristled brush.

Keep all vegetation away from the condenser coil area.

Maintenance Performed by Serviceman-Cooling Season

To keep your unit operating safely and efficiently, the manufacturer recommends that a qualified serviceman check the entire system at least once each year, or more frequently if conditions warrant. Your serviceman may examine these areas of your unit:

1. Filters	→ For cleaning
2. Motors and drive system components	
3. Condenser coils	→ For cleaning
4. Safety Controls	→ For mechanical cleaning
5. Electrical components and wiring	→ For possible replacement or connection tightness
6. Condensate drain	→ For cleaning
7. Inspect the unit duct connections to ensure they are physically sound and sealed to the unit casing.	
8. Inspect the unit mounting support to see that it is sound.	
9. Inspect the unit to ensure there is no obvious deterioration.	

Maintenance Performed By Serviceman-Heating Season

Complete the unit inspections and service routines described below at the beginning of each heating season.

⚠ WARNING

To prevent injury or death due to electrical shock of contact with moving parts, lock unit disconnect switch in open position before servicing unit.
To prevent an explosion and possible injury, death and equipment damage, do not store combustible materials, gasoline or other flammable vapors and liquids near the unit.

Inspect the control panel wiring to verify that all electrical connections are tight and wire insulation is intact.