# CEILING CASSETTE MULTI TYPE AIR CONDITIONERS
# INSTALLATION INSTRUCTIONS
# (Refrigerant : R-407C)



- **This unit is charged with new refrigerant, R-407C.**
- **Be sure to use proper tools for R-407C, when installing the unit.**
- Please read this instruction sheet completely before installing the product.
- When the power cord is damaged, replacement work shall be performed by authorized personnel only.
- Installation work must be performed in accordance with the national wiring standards by authorized personnel only.

**Indoor Unit**

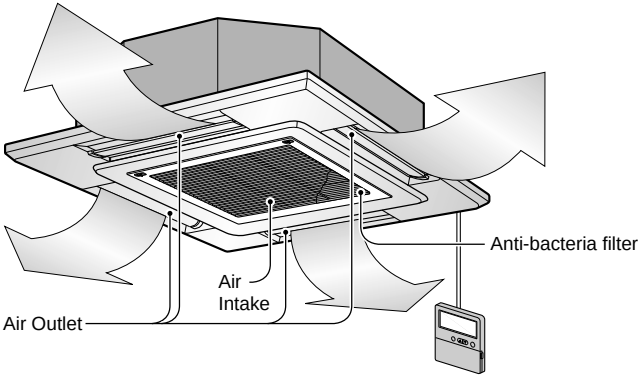


**Outdoor Unit**

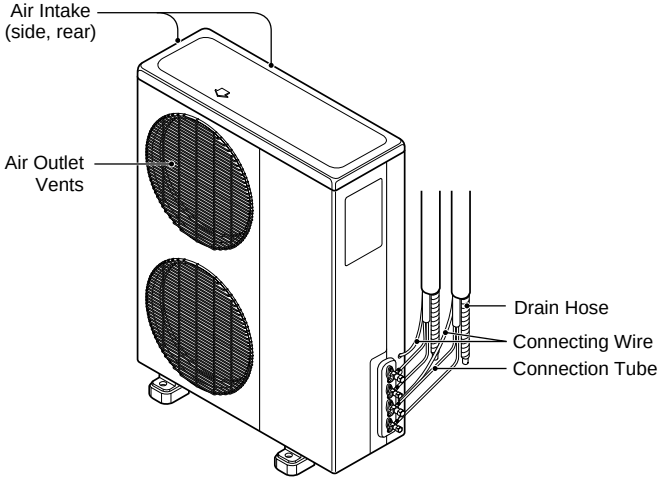


P/No.: 3828A20254A

# OUT-LINE OF INSTALLATION


**1.The following should be always observed for safety ·····3**

**2.Installation of Indoor, Outdoor Unit·····4**

| Installation Works | Installation Parts | Required Tools |
|---|---|---|
| 1) Selection of the best location .....4<br>2) Ceiling opening dimensions and hanging bolt location(unit: mm).....6<br>3) The Indoor Unit Installation .....7<br>4) Remote Controller Installation .....7<br>5) Wiring Connection.....9<br>ELECTRICAL WIRING.....10<br>6) Connecting Pipes to the Indoor Unit .....11<br>PIPING CONNECTION.....12<br>7) Installation of Decorative Panel.....13<br>8) Indoor Unit Drain Piping.....14<br>HEAT INSULATION.....15<br>FORM THE PIPINGS.....15 | • Connecting cable<br>• Pipes: Gas side<br>Liquid side<br>• Hanging Bolt<br>(W 3/8 or M10 length 650mm)<br>• Insulated drain hose<br>• Additional Drain hose<br>(Inner Dia.....32mm) | • Level<br>• Screw driver<br>• Electric drill<br>• Hole core drill (ø70mm)<br>• Flaring Tools set<br>• Torque Wrenches<br>• Hexagonal Wrench (4mm, 5mm)<br>• Gas-leak detector |

**3. Test running ·····16**

1) PRECAUTIONS IN TEST RUN.....16
CHECK THE FOLLOWING ITEMS WHEN INSTALLATION IS COMPLETE .....16
2) Connection of power supply.....17
3) Evaluation of the performance .....17

- Owner's Manual
- Thermometer

**4. Optional Operation ·····18**

1) Two Thermistor System .....18
2) Adjusting air volume to the height of ceiling.....19
3) Group Control(Optional Wiring) .....20

# 1. The following should be always observed for safety



- Please report to or take consent by the supply authority before connecting to the system.
- Be sure to read "THE FOLLOWING SHOULD BE ALWAYS OBSERVED FOR SAFETY" before installing the air conditioner.
- Be sure to observe the cautions specified here as they include important items related to safety.
- The indications and meanings are as follows.

| | |
|---|---|
| ⚠ **WARNING** | Could lead to death, serious injury, etc. |
| ⚠ **CAUTION** | Could lead to serious injury in particular environments when operated incorrectly. |

- After reading this manual, be sure to keep it together with the instruction manual in a handy place .

## ⚠ WARNING

**Do not install it yourself (customer).**

- Incomplete installation could cause injury due to fire, electric shock, the unit falling or a leakage of water. Consult the dealer from whom you purchased the unit or special installer.

**Perform the installation securely referring to the installation manual.**

- Incomplete installation could cause a personal injury due to fire, electric shock, the unit falling or a leakage of water.

**Install the unit securely in a place which can bear the weight of the unit.**

- When installed in an insufficient strong place, the unit could fall causing injured.

**Perform electrical work according to the installation manual and be sure to use an exclusive circuit.**

- If the capacity of the power circuit is insufficient or there is incomplete electrical work, it could result in a fire or an electric shock.

**Use the specified wires to connect the indoor and the outdoor units securely and attach the wires firmly to the terminal board connecting sections so the stress of the wires is not applied to the sections.**

- Incomplete connecting and fixing could cause fire.

**Attach the electrical part cover to the indoor unit and the service panel to the outdoor unit securely.**

- If the electrical part cover if the indoor unit and/or the service panel if the outdoor unit are not attached securely, it could result in a fire or electric shock due to dust, water, etc.

**Check that the refrigerant gas do not leak after installation is completed.**

**Be sure to use the part provided or specified parts for the installation work.**

- The use of defective parts could cause an injury or leakage of water due to a fire, electric shock, the unit falling, etc.

## ⚠ CAUTION

**Perform grounding**

- Do not connect the ground wire to a gas pipe, water pipe arrester or telephone ground wire. Defective grounding could cause an electric shock.

**Perform the drainage/piping work securely according to the installation manual.**

- If there is a defect in the drainage/piping work, water could drop from the unit and household goods could be wet and damaged.

**Do not install the unit in a place where an inflammable gas leaks.**

- If gas leaks and accumulates in the area surrounding the unit, it could cause an explosion.

# 2. Installation of Indoor, Outdoor Unit

## 1. Selection of the best location

### *1) Indoor unit*

- There should not be any heat source or steam near the unit.
- There should not be any obstacles to prevent the air circulation.
- A place where air circulation in the room will be good.
- A place where drainage can be easily obtained.
- A place where noise prevention is taken into consideration.
- Do not install the unit near the door way.
- Ensure the spaces indicated by arrows from the wall, ceiling, or other obstacles.
- The indoor unit must keep the maintenance space.

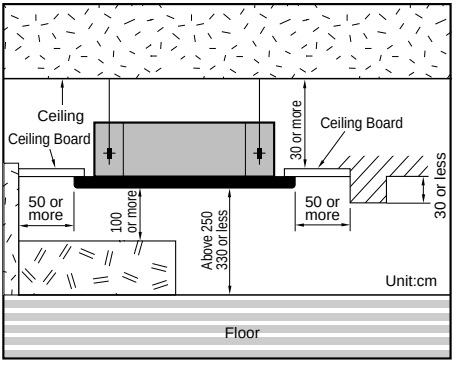


### *2) Outdoor unit*

- If an awning is built over the unit to prevent direct sunlight or rain exposure, be careful that heat radiation from the condenser is not restricted.
- There should not be any animals or plants which could be affected by hot air discharged.
- Ensure the spaces indicated by arrows from the wall, ceiling, fence or other obstacles.

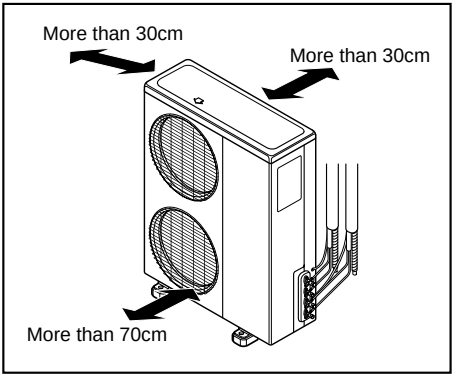

### *3) Piping length and the elevation*

| MODEL | Pipe Size | | Length A(m) | | Elevation B(m) | | * Additional refrigerant (g/m) |
|---|---|---|---|---|---|---|---|
| | GAS | LIQUID | Rated | Max. | Rated | Max. | |
| LM-4460R2TJ | 5/8" | 3/8" | 7.5 | 30 | 5 | 30 | 50 |
| LM-4460F2TJ | 5/8" | 3/8" | 7.5 | 30 | 5 | 30 | 50 |

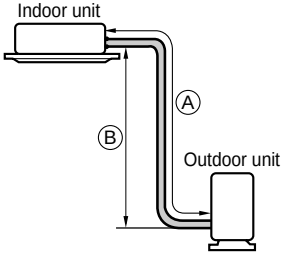


- Rated performance for refrigerant line length of: 7.5m
- If LM-4460R2TJ is installed at a distance of 15m, 375g of refrigerant should be added .....(15-7.5) x 50g
- If LM-4460F2TJ is installed at a distance of 15m, 375g of refrigerant should be added .....(15-7.5) x 50g

## NOTE:

**• Thoroughly study the following installation locations:**

**1. In such places as restaurants and kitchens, considerable amount of oil steam and flour adhere to the turbo fan, the fin of the heat exchanger and the drain pump, resulting in heat exchange reduction, spraying, dispersing of water drops, drain pump malfunction, etc.**
**In these cases, take the following actions:**
- **Make sure that the ventilation fan for smoke-collecting hood on a cooking table has sufficient capacity so that it draws oily steam which should not flow into the suction of the air conditioner.**
- **Make enough distance from a cooking room to install the air conditioner in such a place where it may not suck in oily steam.**

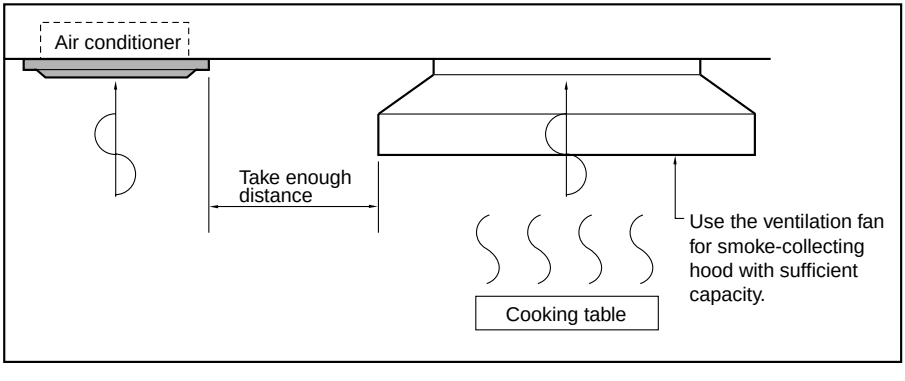


**2. Avoid installing air conditioner in such circumstances where cutting oil mist or iron powder is in suspension in factories, etc.**
**3. Avoid places where inflammable gas is generated, flows in, is stored or vented.**
**4. Avoid places where sulfurous acid gas or corrosive gas is generated.**
**5. Avoid places near high frequency generators.**

## 2. Ceiling opening dimensions and hanging bolt location

• The dimensions of the paper model for installing are the same as those of the ceiling opening dimensions.

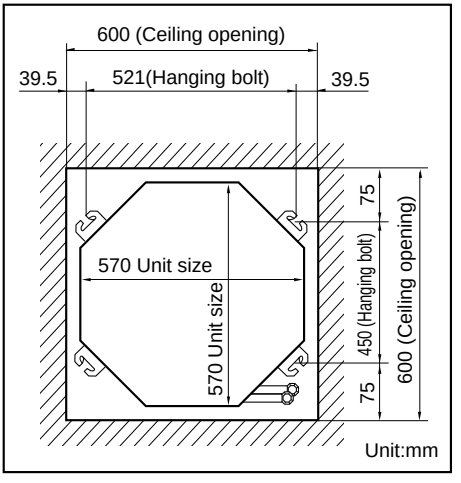


**⚠ CAUTION**

- This air-conditioner uses a drain pump.
- Horizontly install the unit using a level gauge.
- During the installation, care must be taken not to damage electric wires.

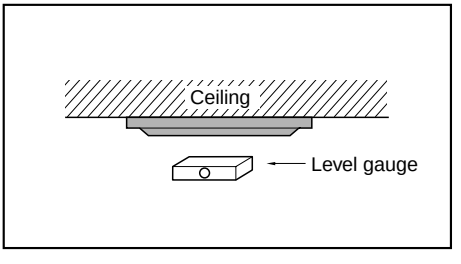


- Select and mark the position for fixing bolts and piping hole.
- Decide the position for fixing bolts slightly tilted to the drain direction after considering the direction of drain hose.
- Drill the hole for anchor bolt on the wall.

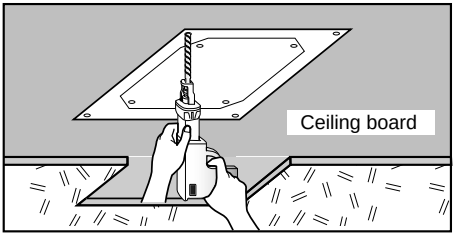

## 3. The Indoor Unit Installation

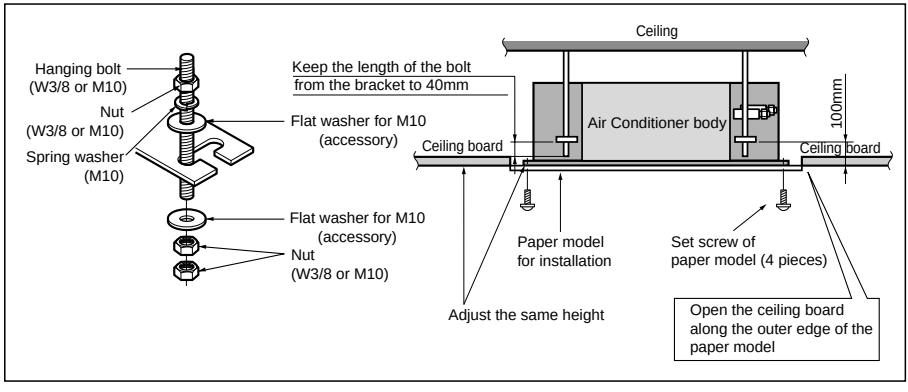


• The following parts is option.
  ① Hanging Bolt - W 3/8 or M10, length 650 mm
  ② Nut - W 3/8 or M10
  ③ Spring Washer - M10
  ④ Plate Washer - M10

**⚠ CAUTION**

• Tighten the nut and bolt to prevent unit falling.

• Drill the piping hole on the wall slightly tilted to the outdoor side using a Ø 70 hole-core drill.

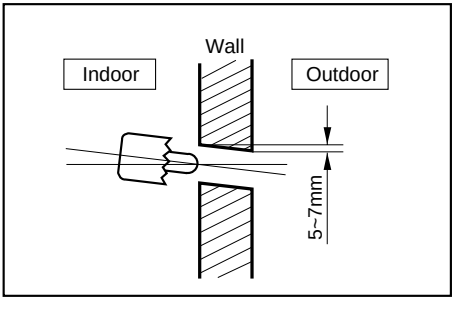


## 4. Remote Controller Installation

**• Although the room temperature sensor is in the indoor unit, the remote control box should be installed in such places away from direct sunlight and high humidity.**

**Installation of the remote control box**

• Select places that are not splashed with water.
• Select control position after receiving customer approval.
• The room temperature sensor of the thermostat for temperature control is built in the indoor unit.
• This remote controller equipped with liquid crystal display. If this position is higher or lower, display is difficult to see.(The standard height is 1.2 ~ 1.5m high)

**Routing of the remote control cord**

• Keep the remote control cord away from the refrigerant piping and the drain piping.
• To protect the remote control cord from electrical noise, place the cord at least 5cm away from other power cables (audio equipment, television set, etc.)
• If the remote control cord is secured to a wall, provide a trap at the top of the cord to prevent water droplets from running.

## WIRED REMOTE CONTROL INSTALLATION

### DISASSEMBLING

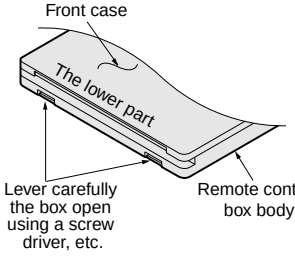


• Separate the under plate from Remote control box.

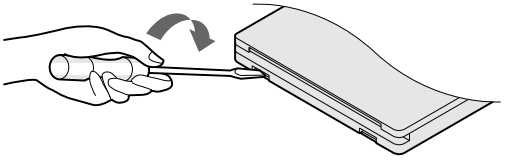

• Fix the cord clamps on the wall by ø 3 tapping screws (accessory).
• Fix the remote control cord.

• Fix the under plate on the wall

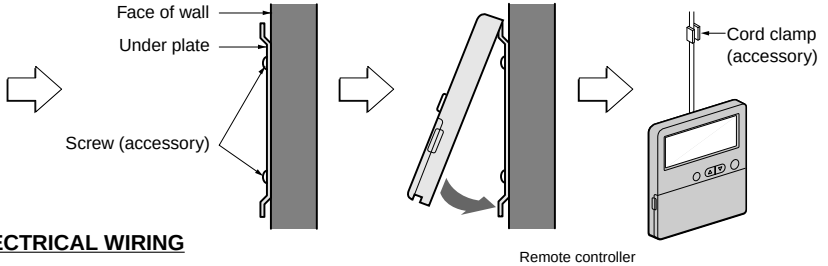


### ELECTRICAL WIRING

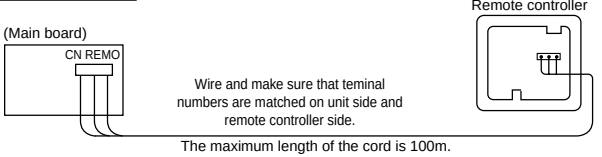


The maximum length of the cord is 100m.
If the length of the cord exceeds 50m, use a wire size greater than 0.5mm$^2$.

## REMOTE CONTROL PREPARATION(OPTION)

### HOW TO MOUNT ONTO A WALL

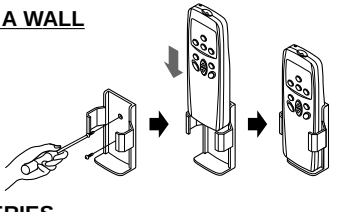

### HOW TO INSERT BATTERIES

**1** Remove the battery cover from the remote controller.
• Slide the cover according to the arrow direction.

**2** Insert the two batteries.
• Be sure that the (+) and (-) directions are correct.
• Be sure that both batteries are new.

**3** Re-attach the cover.
• Slide it back into position.

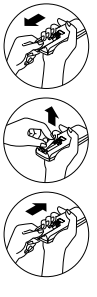

• Do not use rechargeable batteries, such batteries differ from standard dry cells in shape, dimensions, and performance.
• Romove the batteries from the remote controller if the air conditioner is not going to be used for some long time.

## 5. Wiring Connection

• Open the control box cover and connect the Remote control cord and Indoor power wires.

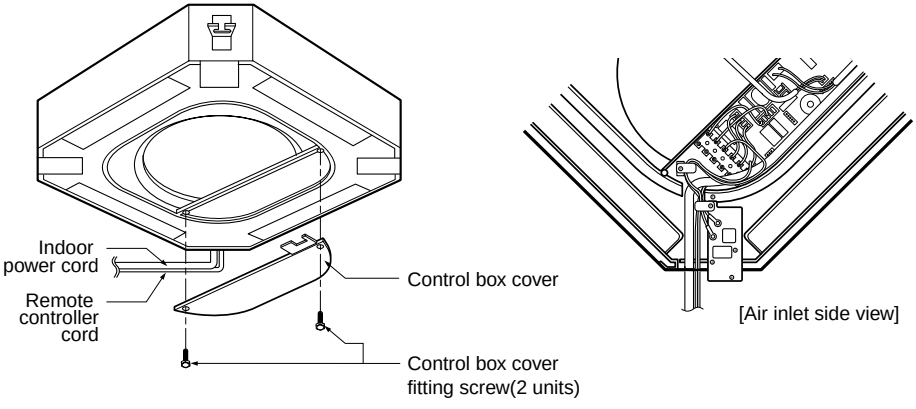


**LM-4460R2TJ**

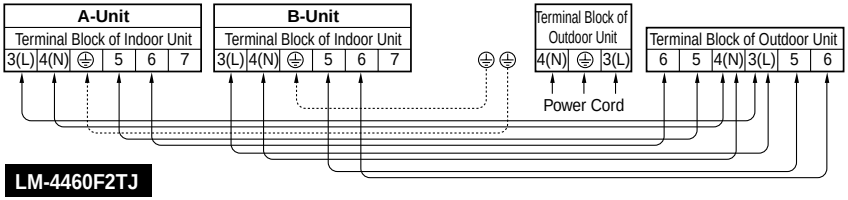


**LM-4460F2TJ**

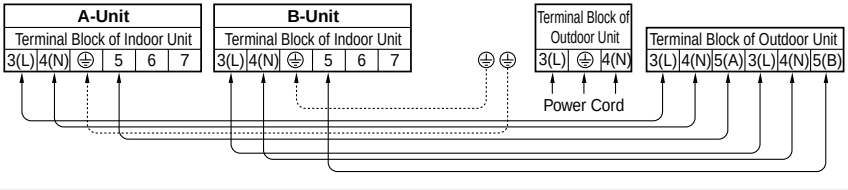


**CAUTION**

The power cord connected to the outdoor unit should be complied with the following specifications (Rubber insulation, type H05RN-F approved by HAR or SAA).

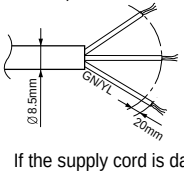


**NORMAL CROSS-SECTIONAL AREA 8.0mm²**

The connecting cable connected to the indoor and outdoor unit should be complied with the following specifications (Rubber insulation, type H05RN-F approved by HAR or SAA).

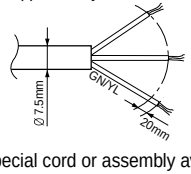


**NORMAL CROSS-SECTIONAL AREA 0.75mm²**

If the supply cord is damaged, it must be replaced by a special cord or assembly available from the manufacturer or its service agent.

**⚠ WARNING**

Make sure that the screws of the terminal are free from looseness.

## ELECTRICAL WIRING

1. All wiring must comply with LOCAL REGULATIONS.
2. Select a power source that is capable of supplying the current required by the air conditioner.
3. Feed the power source to the unit via a distribution switch board designed for this purpose.
4. The terminal screws inside the control box may be loose due to vibration during transport.
   Check the screws for loose connection.
   (Running the air conditioner with loose connection can overload and damage electrical components.)
5. Always ground the air conditioner with a grounding wire and connector to meet the LOCAL REGULATION.

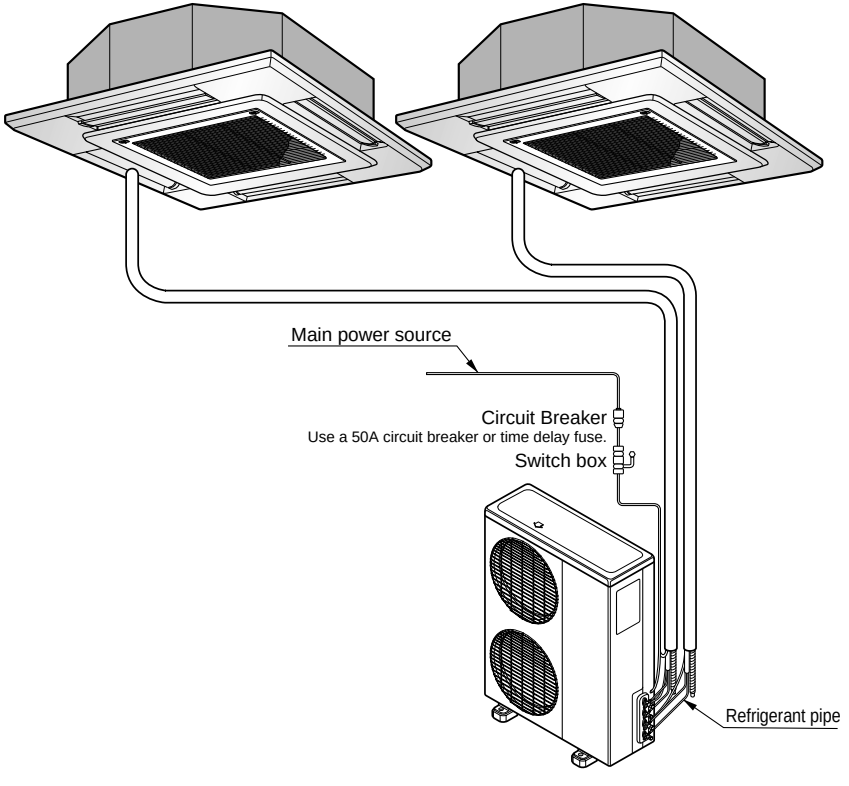

# 6. Connecting Pipes to the Indoor Unit

## • Preparation of Piping

Main cause of gas leakage is defect in flaring work. Carry out correct flaring work in the following procedure.

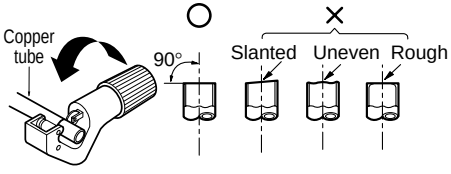


### *1) Cut the pipes and the cable.*

- Use the accessory piping kit or the pipes purchased locally.
- Measure the distance between the indoor and the outdoor unit.
- Cut the pipes a little longer than measured distance.
- Cut the cable 1.5m longer than the pipe length.

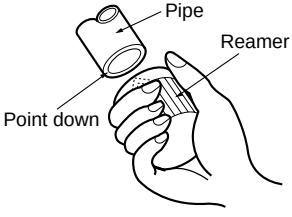


### *2) Burrs removal*

- Completely remove all burrs from the cut cross section of pipe/tube.
- Put the end of the copper tube/pipe to downward direction as you remove burrs in order to avoid to let burrs drop in the tubing.

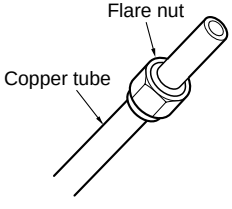


### *3) Putting nut on*

- Remove flare nuts attached to indoor and outdoor units, than put them on pipe/tube having completed burr removal.
  (Not possible to put them on after flaring work)

### *4) Flaring work*

- Carry out flaring work using flaring tool as shown below.

| Outside diameter | | A |
|---|---|---|
| mm | inch | mm |
| Ø9.52 | 3/8 | 0.5~0.8 |
| Ø15.88 | 5/8 | 0.8~1.0 |

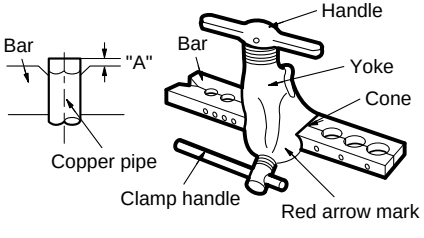


Firmly hold copper tube in a bar(or die) as indicated dimension in the table above.

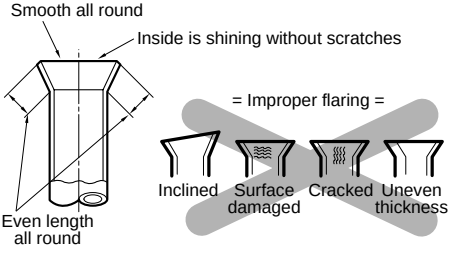


### *5) Check*

- Compare the flared work with figure below.
- If flare is noted to be defective, cut off the flared section and do flaring work again.

## Piping Connection

1. Form the piping according to its routing. Avoid bending and bending back the same piping point more than three times. (This will result in hardening the pipe.)
2. After deforming the piping, align centers of the union fitting of the indoor unit and the piping, and tighten them firmly with wrenches.
3. Connect pipe to the service valve or ball valve which is located below the outdoor unit.
4. After completing the piping connection, be sure to check if there is gas leakage in indoor and outdoor connection.

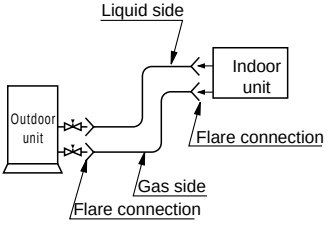


## Vacuum drying

After completing the piping connection, execute vacuum drying for the connecting piping and the indoor unit.
The vacuum drying must be carried out using the service ports of both the liquid and gas side valves.

**⚠ CAUTION**

**Use two wrenches and tighten with regular torque.**

| Flare nut fastening torque | |
|---|---|
| Ø9.52mm | 4.0kg·mm |
| Ø15.88mm | 6.6kg·mm |

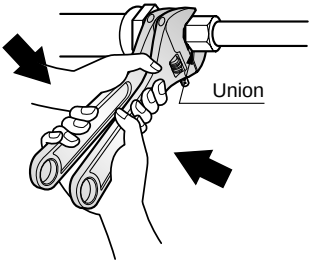

# 7. Installation of Decorative Panel

**The decorative panel has its installation direction.**

**Before installing the decorative panel, always remove the paper template.**

ENGLISH

1. Temporarily fix two decorative panel fixing screws (hexagon M5 screw) on the unit body. (Tighten by amount 10mm in length.)
   The fixing screws (hexagon M5 screw) are included the decorative panel box.
2. Remove the air inlet grille from the decorative panel. (Remove the hook for the air inlet grille cord.)
3. Hook the decorative panel key hole ( ) on the screws fixed in step above, and slide the panel so that the screws reach the key hole edge.
4. Retighten completely two temporarily fixed screws and other two screws. (Total 4 screws)
5. Connect the louver motor connector and display connector.
6. After tightening these screws, install the air inlet grille (including the air filter).

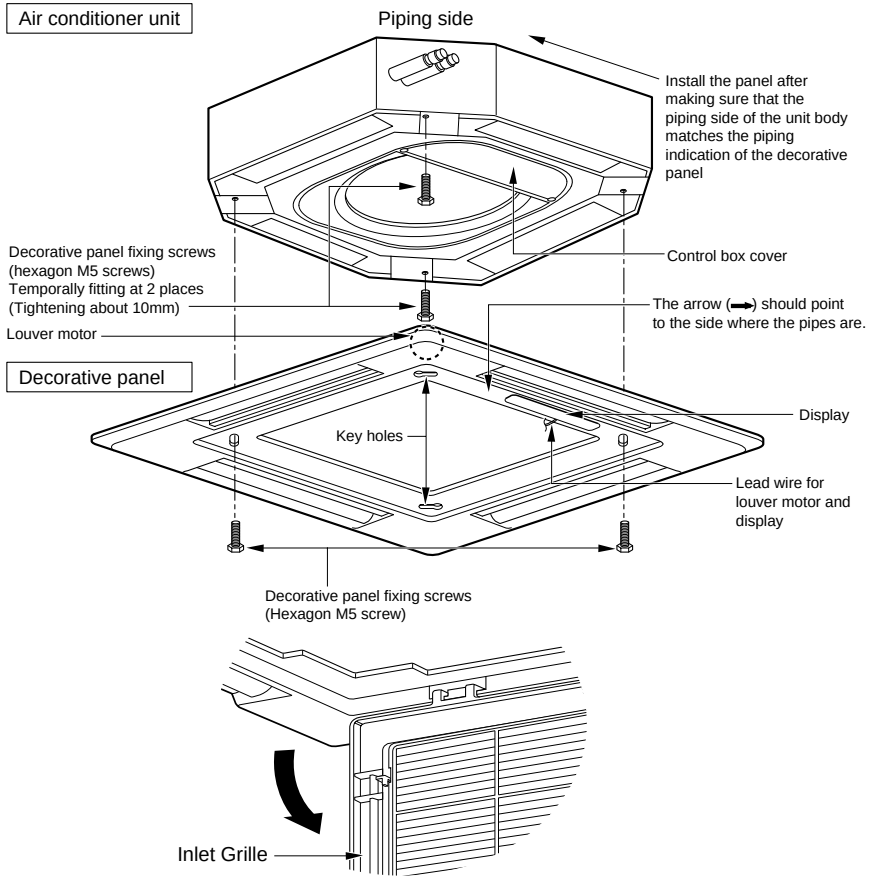

**⚠ CAUTION**

Install certainly the decorative panel.
Cool air leakage causes sweating. ⇨ Water drops fall.

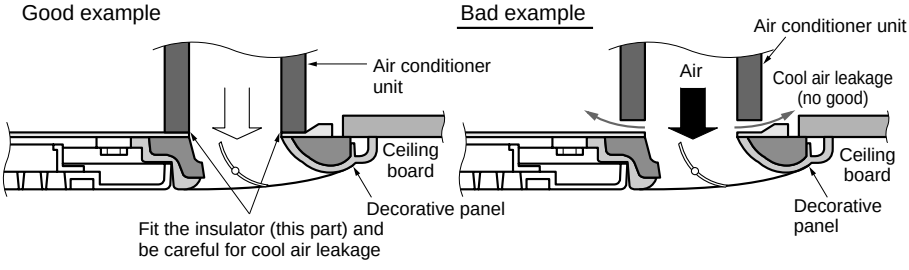


## 8. Indoor Unit Drain Piping

- Drain piping must have down-slope (1/50 to 1/100): be sure not to provide up-and-down slope to prevent reversal flow.
- During drain piping connection, be careful not to exert extra force on the drain port on the indoor unit.
- The outside diameter of the drain connection on the indoor unit is 32mm.

Piping material: Polyvinyl chloride pipe VP-25 and pipe fittings

- Be sure to execute heat insulation on the drain piping.

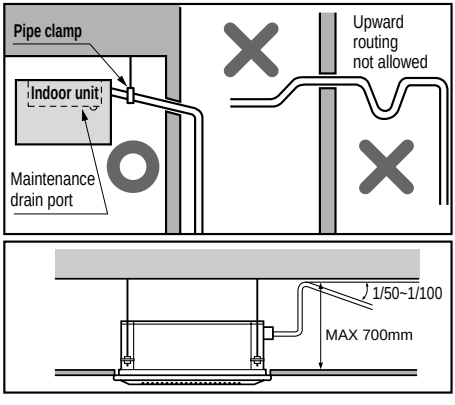


Heat insulation material: Polyethylene foam with thickness more than 8 mm.

**Drain test**

The air conditioner uses a drain pump to drain water.
Use the following procedure to test the drain pump operation:

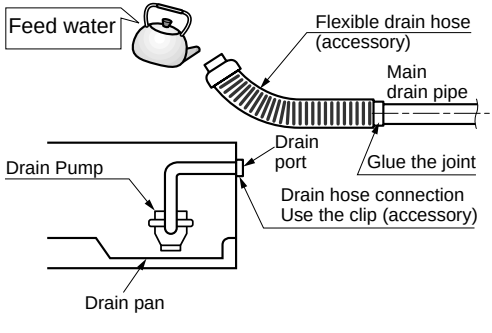


- Connect the main drain pipe to the exterior and leave it provisionally until the test comes to an end.
- Feed water to the flexible drain hose and check the piping for leakage.
- Be sure to check the drain pump for normal operating and noise when electrical wiring is complete.
- When the test is complete, connect the flexible drain hose to the drain port on the indoor unit.

## HEAT INSULATION

1. Use the heat insulation material for the refrigerant piping which has an excellent heat-resistance (over 120°C).

2. Precautions in high humidity circumstance:
   This air conditioner has been tested according to the "KS Standard Conditions with Mist" and confirmed that there is not any default. However, if it is operated for a long time in high humid atmosphere (dew point temperature: more than 23°C), water drops are liable to fall. In this case, add heat insulation material according to the following procedure:

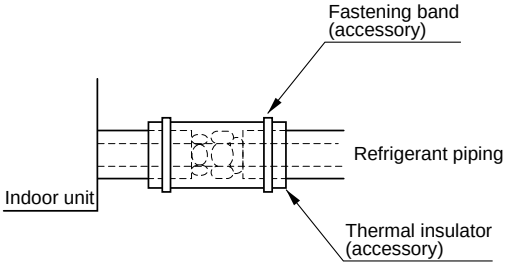


- Heat insulation material to be prepared... Adiabatic glass wool with thickness 10 to 20mm.
- Stick glass wool on all air conditioners that are located in ceiling atmosphere.
- In addition to the normal heat insulation (thickness: more than 8mm) for refrigerant piping (gas piping: thick piping) and drain piping, add further 10mm to 30mm thickness material.

## FORM THE PIPINGS

**1. Wrap the connecting portion of indoor unit with the Insulation material and secure it with two Plastic Bands. (for the right pipings)**
   - If you want to connect an additional drain hose, the end of the drain-outlet should keep distance from the ground. (Do not dip it into water, and fix it on the wall to avoid swinging in the wind.)

**In case of the Outdoor unit being installed below position of the Indoor unit.**

**2. Tape the Pipings, drain hose and Connecting Cable from bottom to top.**

**3. Form the pipings gathered by taping along the exterior wall and fix it onto the wall by saddle or equivalent.**

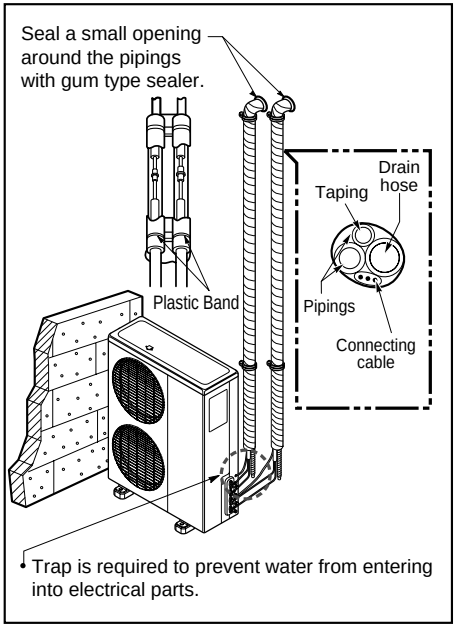

**In case of the Outdoor Unit being installed above position of the Indoor Unit.**

**2. Tape the Pipings and Connecting cable from bottom to top.**

**3. Form the pipings gathered by taping along the exterior wall, and make the trap prevent water from entering into the room.**

**4. Fix the pipings onto the wall by saddle or equivalent.**

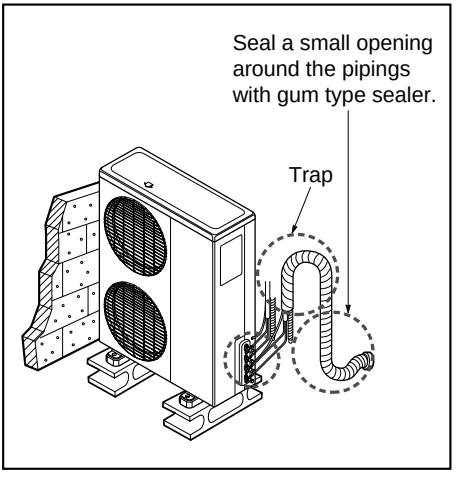


# 3. Test running

## *1) PRECAUTIONS IN TEST RUN*

- The initial power supply must provide at least 90% of the rated voltage.
  Otherwise, the air conditioner should not be operated.

**Caution**

① For test run, carry out the cooling operation firstly even during heating season. If heating operation is carried out firstly, it leads to the trouble of compressor. Then attention must be paid.

② Carry out the test run more than 5 minutes without fail.
(Test run will be cancelled 18 minutes later automatically)

- The test run is started by pressing the room temperature checking button and down timer button for 3 seconds at the same time.
- To cancel the test run, press any button.

## CHECK THE FOLLOWING ITEMS WHEN INSTALLATION IS COMPLETE

- After completing work, be sure to measure and record trial run properties, and store measured data, etc.
- Measuring items are room temperature, outside temperature, suction temperature, blow out temperature, wind velocity, wind volume, voltage, current, presence of abnormal vibration and noise, operating pressure, piping temperature, compressive pressure.
- As to the structure and appearance, check following items.

☐Is the circulation of air adequate?
☐Is the draining smooth?
☐Is the heat insulation complete (refrigerant and drain piping)?
☐Is there any leakage of refrigerant?
☐Is the remote controller switch operated?
☐Is there any faulty wiring?
☐Are not terminal screws loosened?

M4.....118N·cm{12kgf·cm}  M5.....196N·cm{20kgf·cm}
M6.....245N·cm{25kgf·cm}  M8.....588N·cm{60kgf·cm}

### *2) Connection of power supply*

**1. Connect the power supply cord to the independent power supply.**
- Circuit breaker is required.

**2. Operate the unit for fifteen minutes or more.**

### *3) Evaluation of the performance*

1. Measure the temperature of the intake and discharge air.
2. Ensure the difference between the intake temperature and the discharge one is more than 8°C (Cooling) or reversely (Heating).

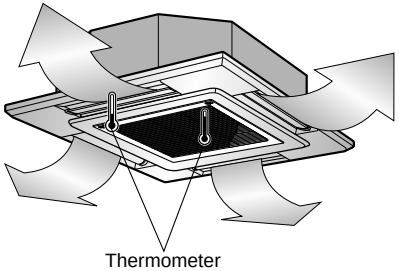


**CAUTION**

After the confirmation of the above conditions, prepare the wiring as follows:

**1) Never fail to have an individual power specialized for the air conditioner. As for the method of wiring, be guided by the circuit diagram pasted on the inside of control box cover.**

**2) Provide a circuit breaker switch between power source and the unit.**

**3) The screw which fasten the wiring in the casing of electrical fittings are liable to come loose from vibrations to which the unit is subjected during the course of transportation. Check them and make sure that they are all tightly fastened. (If they are loose, it could give rise to burn-out of the wires.)**

**4) Specification of power source**

**5) Confirm that electrical capacity is sufficient.**

**6) Be sure that the starting voltage is maintained at more than 90 percent of the rated voltage marked on the name plate.**

**7) Confirm that the cable thickness is as specified in the power sources specification.**
**(Particularly note the relation between cable length and thickness.)**

**8) Never fail to equip a leakage breaker where it is wet or moist.**

**9) The following troubles would be caused by voltage drop-down.**
- Vibration of a magnetic switch, damage on the contact point there of, fuse breaking, disturbance to the normal function of a overload protection device.
- Proper starting power is not given to the compressor.

## HAND OVER

Teach the customer the operation and maintenance procedures, using the operation manual (air filter cleaning, temperature control, etc.).

# 4. Optional Operation

## 1) Two Thermistor System

(1) Open the rear cover of the wired remote-controller to set the mode.
(2) Select one of three selectable modes as follows.
• Position 1:
The room temperature is controlled by the thermistor of the main body.
• Position 2:
The room themperature is controlled by the thermistor of the wired remote-controller, control the temperature according to the position of wired remote-controller.
• Position 3:
The room temperature is controlled by lower temperature between the temperature of main body and of remote-controller sensor.
(3) Move the slide switch to set position.

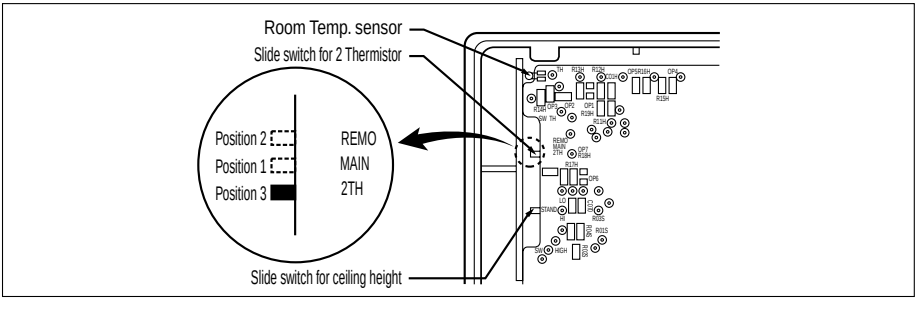


(4) Close the rear cover and check if it works normally.

**⚠ CAUTION**

• Select the position after counselling with a customer.
• In case of cooling mode, room temperature is controlled by the main body sensor.
• To control the room temperature by a wired remote controller, install controller(room temp. sensor) to sense the temperature more accurately.
• Maunfactured in the position 3.

## 2) Adjusting air volume to the height of ceiling

You can choose the RPM(or air volume) of indoor motor according to the height of ceiling to supply the comfortable atmosphere to consumers.

**Procedure**

1. Choose the selectable position in the table after measuring the height of ceiling.

| Ceiling height | Mode of slide switch | Change of air volume | Remark |
|---|---|---|---|
| more than 3.3m | High Ceiling | Increasing | Maunfactured in standard mode |
| 2.7~3.3m | Standard | - | |
| less than 2.7m | Low Ceiling | Decreasing | |

2. In the case of changing the height as "high" or "low", open the rear cover of the wired remote-controller.
3. Move the slide switch to the set position.

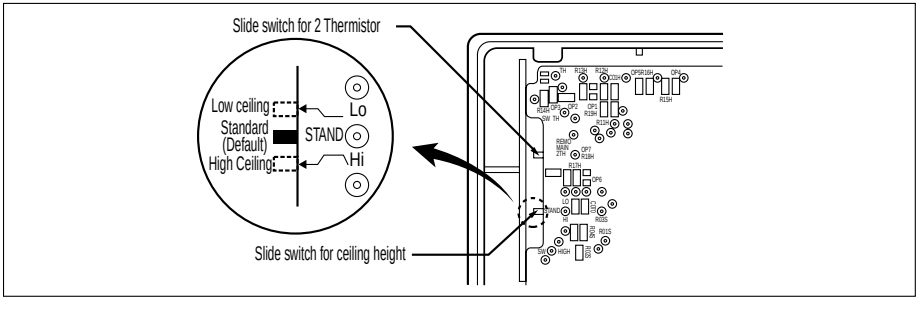


4. Close the rear cover and check if it works nomally.

## 3) Group Control(Optional Wiring)

It operates maximum 16 Units by only one Wired Remote Controller,
and each Unit starts sequentially to prevent overcurrent.

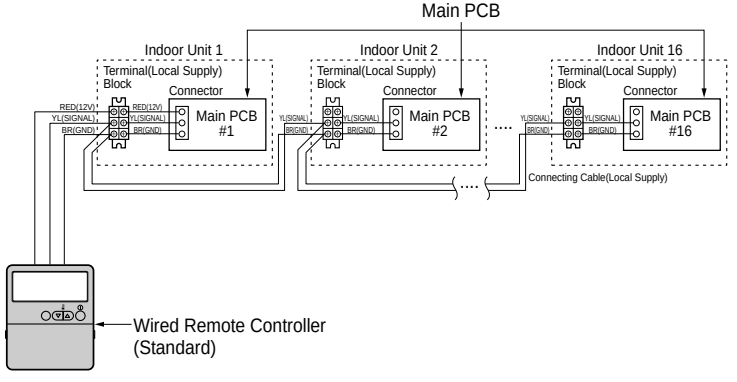


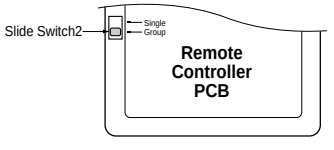


- Using the supplied Wired Remote Controller, wire them like above.
- Move slide switch 2 to "Group" position.
- Ensure that the color of wire.

**⚠ CAUTION**

- Be careful not to exchange the color of wires.
- The maximum length of connecting wire should be below 200m(25Ω) on connecting each units.
- Use a wire more than 0.5mm$^2$