FREE JOINT MULTI TYPE AIR CONDITIONER
INSTALLATION INSTRUCTIONS

ENGLISH

- Please read this instruction sheet completely before installing the product.
- When the power cord is damaged, replacement work shall be performed by authorized personnel only.
- Installation work must be performed in accordance with the national wiring standards by authorized personnel only.

Indoor Unit

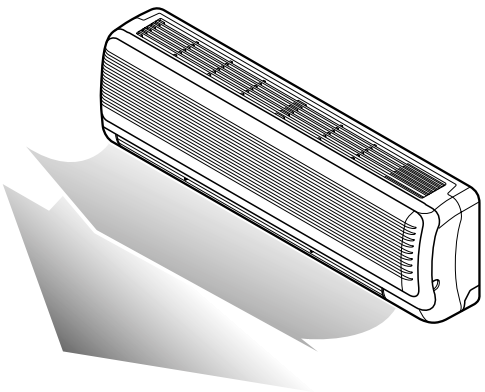

Outdoor Unit

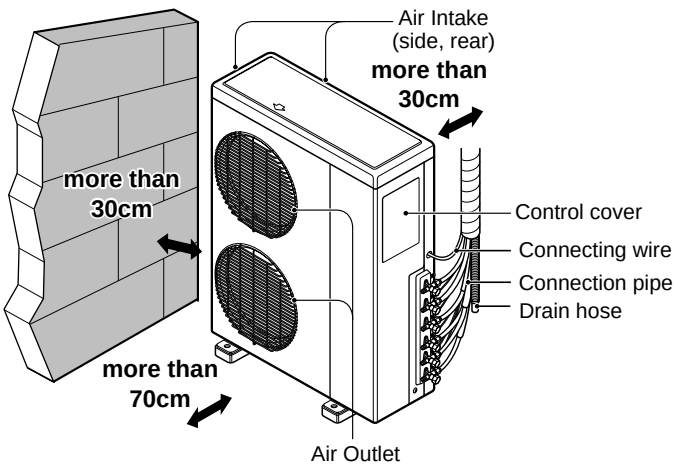

P/No. : 3828A20187D

OUT-LINE OF INSTALLATION

Installation Requirements	Required Parts	Required Tools
The following should be always observed for safety .3		
Installation of indoor, outdoor unit·····4	❑ Installation plate ❑ Four type "A" screws ❑ Connecting cable ❑ Hanging Bolt (Cassett type) (W 3/8 or M10 length 650mm)	❑ Level gauge ❑ Screw driver ❑ Electric drill ❑ Hole core drill(ø70mm)
Flaring work and connection of piping·····7 Connection of piping(Indoor)·····8 For left rear piping For right rear piping Connection of piping(Outdoor)·····12	❑ Pipes: Gas side ·1/2", 3/8", 5/8" Liquid side ·····1/4" (Refer to page 10) ❑ Insulation materials ❑ Additional drain pipe • Outer Diameter ·····15.5mm (Room Type) • Inner Diameter ·····32mm (Cassette Type)	❑ Flaring tool set ❑ Specified torque wrenches different depending on model No. (Refer to page 10) ❑ Spanner.....Half union
Connecting the cable between indoor unit and outdoor unit ·····14		
Checking the drainage and Forming the pipings ·····18		❑ A glass of water ❑ Screw driver
Test running·····20	❑ Two type "B" screws	❑ Owner's manual ❑ Thermometer ❑ Holder Remote Control

THE FOLLOWING SHOULD BE ALWAYS OBSERVED FOR SAFETY

- Be sure to read "THE FOLLOWING SHOULD ALWAYS BE OBSERVED FOR SAFETY" before installing the air conditioner.
- Be sure to observe the cautions specified here as they include important items related to safety.
- The indications and meanings are as follows.

⚠ WARNING

Could lead to death, serious injury, etc.

⚠ CAUTION

Could lead to serious injury in particular environments when operated incorrectly.

- After reading this manual, be sure to keep it together with the instruction manual in a handy place on the customer's site.

⚠ WARNING

Do not install it yourself (customer).

- Incomplete installation could cause injury due to fire, electric shock, the unit falling or a leakage of water. Consult the dealer from whom you purchased the unit or special installer.

Perform the installation securely referring to the installation manual.

- Incomplete installation could cause a personal injury due to fire, electric shock, the unit falling or a leakage of water.

Install the unit securely in a place which can bear the weight of the unit.

- When installed in an insufficient strong place, the unit could fall causing injured.

Perform electrical work according to the installation manual and be sure to use an exclusive circuit.

- If the capacity of the power circuit is insufficient or there is incomplete electrical work, it could result in a fire or an electric shock.

Use the specified wires to connect the indoor and outdoor units securely and attach the wires firmly to the terminal board connecting sections so the stress of the wires is not applied to the sections.

- Incomplete connecting and fixing could cause fire.

Check that the refrigerant gas do not leak after installation is completed.

Attach the electrical part cover to the indoor unit and the service panel to the outdoor unit securely.

- If the electrical part cover if the indoor unit and/or the service panel if the outdoor unit are not attached securely, it could result in a fire or electric shock due to dust, water, etc.

Be sure to use the part provided or specified parts for the installation work.

- The use of defective parts could cause an injury or leakage of water due to a fire, electric shock, the unit falling, etc.

⚠ CAUTION

Do not install the unit in a place where an inflammable gas leaks.

- If gas leaks and accumulates in the area surrounding the unit, it could cause an explosion.

Perform the drainage/piping work securely according to the installation manual.

- If there is a defect in the drainage/piping work, water could drop from the unit and household goods could be wet and damaged.

INSTALLATION OF INDOOR, OUTDOOR UNIT

Read completely, then follow step by step.

1 Select the best location

1. Room Type Indoor Unit

- Do not have any heat or steam near the unit.
- Select a place where there are no obstacles in front of the unit.
- Make sure that condensation drainage can be conveniently routed away.
- Do not install near a doorway.
- Ensure that the space around the left and right of the unit is more than 5cm. The unit should be installed as high on the wall as possible, allowing a minimum of 5cm from ceiling.
- Use a stud finder to locate studs to prevent unnecessary damage to the wall.

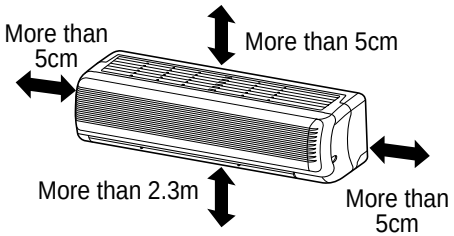

⚠ CAUTION

Install the indoor unit on the wall where the height from the floors more than 2.3 meters.

2. Outdoor unit

- If an awning is built over the unit to prevent direct sunlight or rain exposure, make sure that heat radiation from the condenser is not restricted.
- Ensure that the space around the back and sides is more than 30cm. The front of the unit should have more than 70cm of space.
- Do not place animals and plants in the path of the warm air.
- Take the air conditioner weight into account and select a place where noise and vibration are minimum.
- Select a place so that the warm air and noise from the air conditioner do not disturb neighbors.

- ***Rooftop Installations:***
  If the outdoor unit is installed on a roof structure, be sure to level the unit. Ensure the roof structure and anchoring method are adequate for the unit location. Consult local codes regarding rooftop mounting.

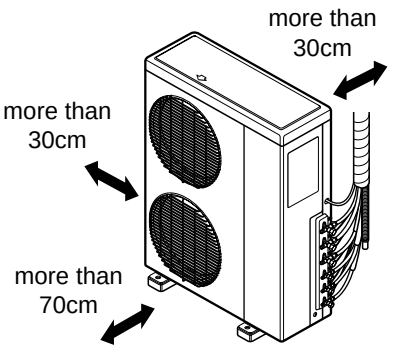

2 How to fix installation plate (Room Type Indoor Unit)

The wall you select should be strong and solid enough to prevent vibration

1. Mount the installation plate on the wall with four type "A" screws. If mounting the unit on a concrete wall, use anchor bolts.

■ Mount the installation plate horizontally by aligning the centerline using a level.

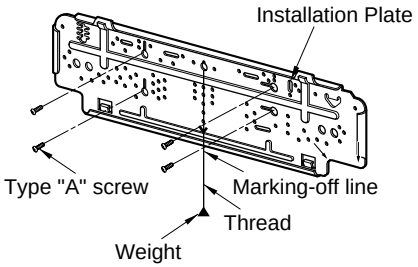

2. Measure the wall and mark the centerline. It is also important to use caution concerning the location of the installation plate-routing of the wiring to power outlets is through the walls typically. Drilling the hole through the wall for piping connections must be done safely.

7K/9K Btu

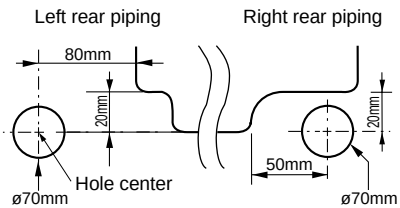

12K Btu

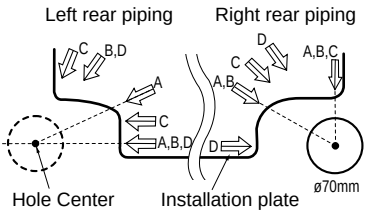

18K/24K Btu

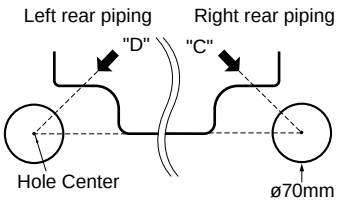

■ For right rear piping and left rear piping, draw a line in the direction of the arrow marked "A". The meeting point of the two lines is the center of the hole.

• The position of the center of the hole.

Left holecore position	Right holecore position
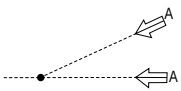	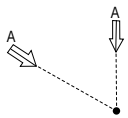

3 Drill a hole in the wall

■ Drill the piping hole with a ø70mm hole core drill. Drill the piping hole at either the right or the left with the hole slightly slanted to the outdoor side.

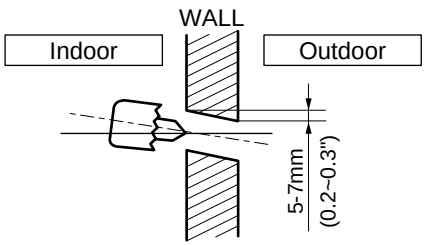

4 Piping length and elevation

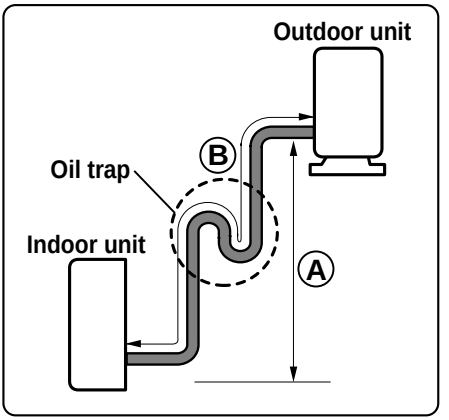

In case more than 5m

CAUTION

- **Capacity is based on standard length and maximum allowance length is on the basis of reliability.**
- **Oil trap should be installed every 5~7 meters.**

Pipe Size		Standard Length (m)	Max. Elevation Ⓐ Ⓒ (m)	Max. length Ⓑ Ⓓ (m)	Additional Refrigerant (g/m)
GAS	LIQUID				
Ø 9.52mm(3/8")	Ø 6.35mm(1/4")	7.5	7.5	25	25
Ø 12.7mm(1/2")	Ø 6.35mm(1/4")				
Ø 15.88mm(5/8")	Ø 6.35mm(1/4")				

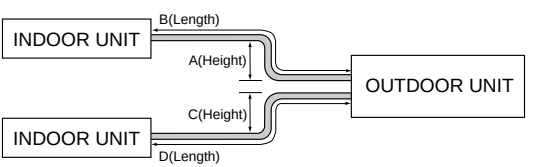

** A, B mean indoor unit higher located than outdoor unit.
C, D mean outdoor unit higher located than indoor unit.

1 Flaring work

Main cause for gas leakage is due to defect in flaring work. Carry out correct flaring work in the following procedure.

1. Cut the pipes and the cable.

- Use the piping kit accessory or the pipes purchased locally.
- Measure the distance between the indoor and the outdoor unit.
- Cut the pipes a little longer than measured distance.
- Cut the cable 1.5m longer than the pipe length.

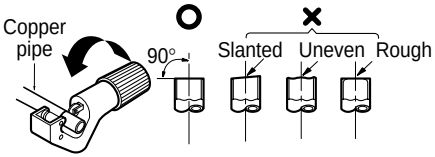

2. Burrs removal

- Completely remove all burrs from the cut cross section of pipe/tube.
- Put the end of the copper tube/pipe in a downward direction as you remove burrs in order to avoid dropping burrs into the tubing.

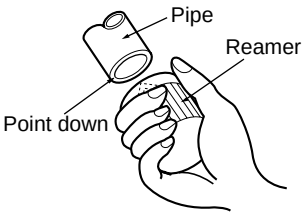

3. Putting nut on

- Remove flare nuts attached to indoor and outdoor unit, then put them on pipe/tube having completed burr removal. (not possible to put them on after flaring work)

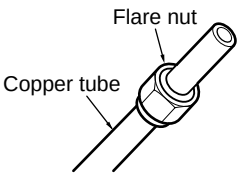

4. Flaring work

- Carry out flaring work using flaring tool as shown below.

Outside diameter		A
mm	inch	mm
ø6.35	1/4	0.5~0.8
ø9.52	3/8	0.5~0.8
ø12.7	1/2	0.5~0.8
ø15.88	5/8	0.8~1.0

Firmly hold copper pipe in a die in the dimension shown in the table above.

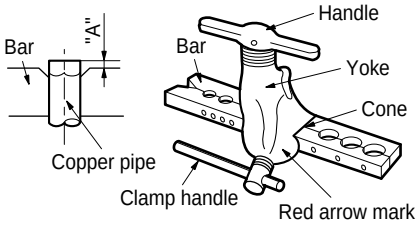

5. Check

- Compare the flared work with figure below.
- If flare is noted to be defective, cut off the flared section and do flaring work again.

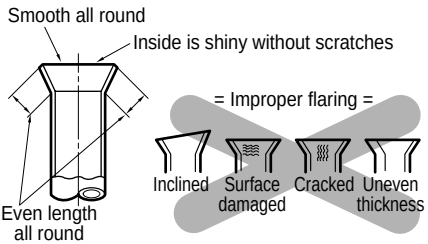

6. Piping Connection

1. Form the piping according to its routing. Avoid bending and bending back the same piping point more than three times. (This will result in hardening the pipe.)
2. After deforming the piping, align centers of the union fitting of the indoor unit and the piping, and tighten them firmly with wrenches.
3. Connect pipe to the service valve or ball valve which is located below the outdoor unit.
4. After completing the piping connection, be sure to check if there is gas leakage in indoor and outdoor connection.

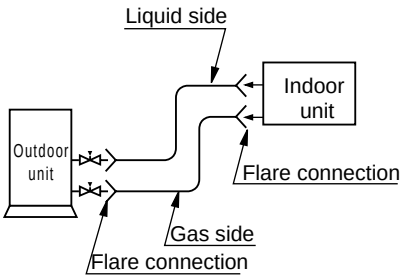

7. Vacuum drying

After completing the piping connection, execute vacuum drying for the connecting piping and the indoor unit.
The vacuum drying must be carried out using the service ports of both the liquid and gas side valves.

■ Tighten the flare nut with a wrench.

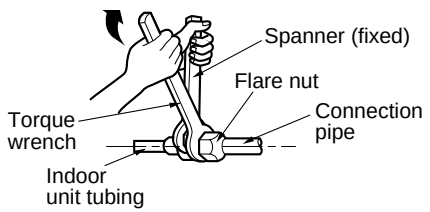

Flare nut fastening torque	
Ø6.35mm (1/4")	1.8kg.mm
Ø9.52mm (3/8")	4.0kg.mm
Ø12.7mm (1/2")	5.5kg.mm
Ø15.88mm (5/8")	6.6kg.mm

2 Connection of piping -- Indoor

■ Preparing the indoor unit's piping and drain hose for installation through the wall.
■ Remove the plastic tubing retainer(see illustration below) and pull the tubing and drain hose away from chassis.
■ Replace the plastic tubing holder in the original position.

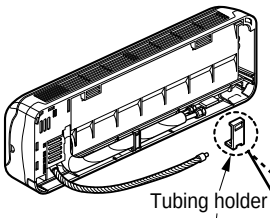

To remove the holder, press the bottom of chassis near the holder upward and pull the tab out of its hole.

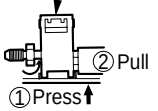

CAUTION
When install, make sure that the remaining parts must be removed clearly so as not to damage the piping and drain hose, especially power cord and connecting cable.

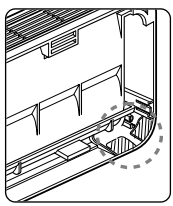

For left rear piping

1. Route the indoor tubing and the drain hose in the direction of rear left.

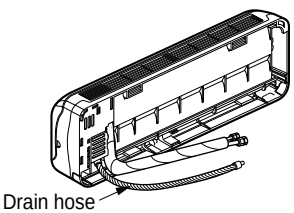

2. Insert the connecting cable into the indoor unit from the outdoor unit through the piping hole.

■ Do not connect the cable to the indoor unit.
■ Make a small loop with the cable for easy connection later.

3. Tape the tubing, drain hose and the connecting cable. Be sure that the drain hose is located at the lowest side of the bundle. Locating at the upper side can cause drain pan to overflow inside the unit.

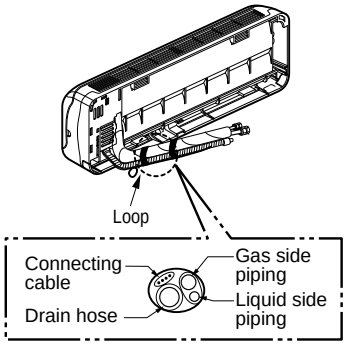

NOTE: If the drain hose is routed inside the room, insulate the hose with an insulation material* so that dripping from "sweating"(condensation) will not damage furniture or floors.
*Foamed polyethylene or equivalent is recommended.

4. Indoor unit installation

■ Hook the indoor unit onto the upper portion of the installation plate.(Engage the two hooks of the rear top of the indoor unit with the upper edge of the installation plate.) Ensure that the hooks are properly seated on the installation plate by moving it left and right.

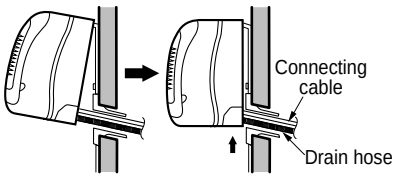

Press the lower left and right sides of the unit against the installation plate until the hooks engage into their slots(clicking sound).

5. Connecting the pipings to the indoor unit and drain hose to drain pipe.

■ Align the center of the pipings and sufficiently tighten the flare nut by hand.

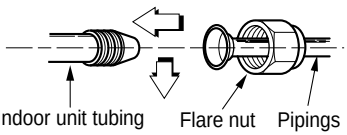

■ When extending the drain hose at the indoor unit, install the drain pipe.

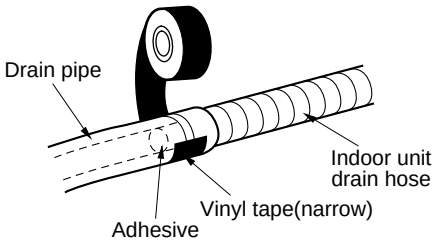

6. Wrap the insulation material around the connecting portion.

■ Overlap the connection pipe insulation material and the indoor unit pipe insulation material. Bind them together with vinyl tape so that there is no gap.

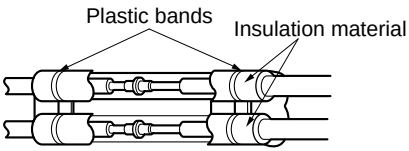

■ Wrap the area which accommodates the rear piping housing section with vinyl tape.

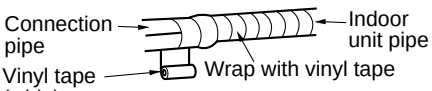

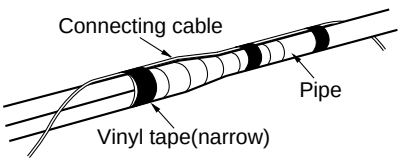

■ Bundle the piping and drain hose together by wrapping them with vinyl tape over the range within which they fit into the rear piping housing section.

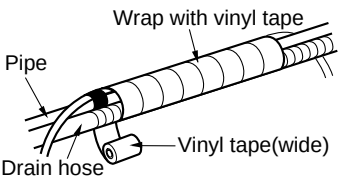

For right rear piping

1. Route the indoor tubing and the drain hose to the required piping hole position.

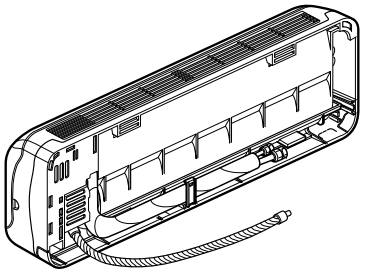

2. Insert the piping, drain hose and the connecting cable into the piping hole.

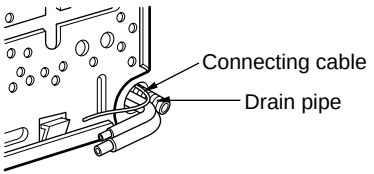

3. Insert the connecting cable into the indoor unit.

- ■ Don't connect the cable to the indoor unit.
- ■ Make a small loop with the cable for easy connection later.

4. Tape the drain hose and the connecting cable.

- Connecting cable

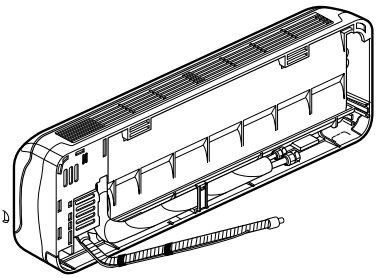

5. Indoor unit installation

- ■ Hang the indoor unit from the hooks at the top of the installation plate.
- ■ Insert the spacer etc. between the indoor unit and the installation plate and separate the bottom of the indoor unit from the wall.

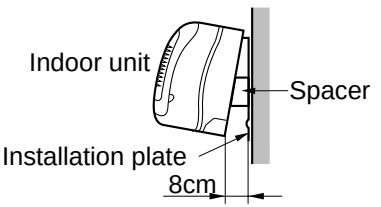

6. Connecting the pipings to the indoor unit and the drain hose to drain pipe.

- ■ Align the center of the pipings and sufficiently tighten the flare nut by hand.

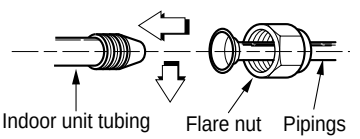

■ When extending the drain hose at the indoor unit, install the drain pipe.

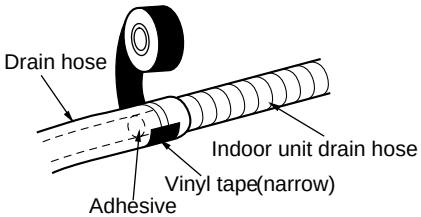

7. Wrap the insulation material around the connecting portion.

■ Overlap the connection pipe heat insulation and the indoor unit pipe heat insulation material. Bind them together with vinyl tape so that there is no gap.

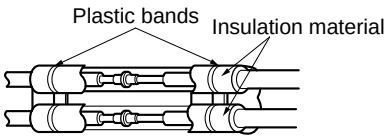

■ Wrap the area which accommodates the rear piping housing section with vinyl tape.

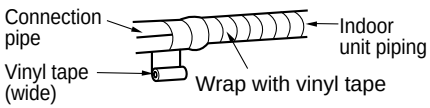

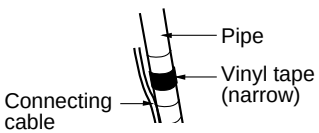

■ Bundle the piping and drain hose together by wrapping them with cloth tape over the range within which they fit into the rear piping housing section.

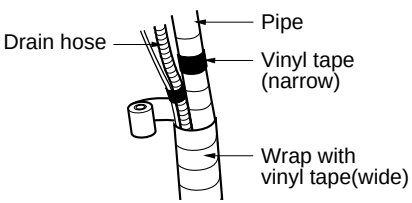

8. Reroute the pipings and the drain hose across the back of the chassis.

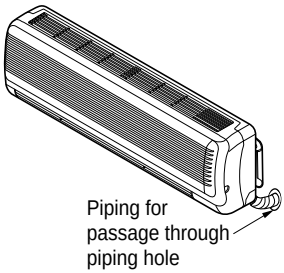

9. Set the pipings and the drain hose to the back of the chassis with the tubing holder.

■ Hook the edge of tubing holder to tap on chassis and push the bottom of tubing holder to be engaged at the bottom of chassis.

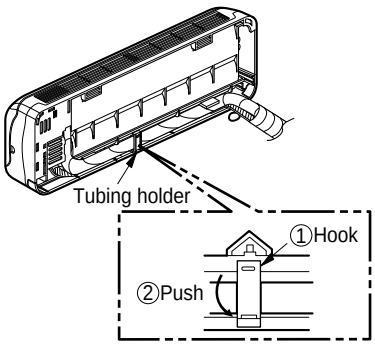

10. Indoor unit installation

■ Remove the spacer.

■ Ensure that the hooks are properly seated on the installation plate by moving it left and right.

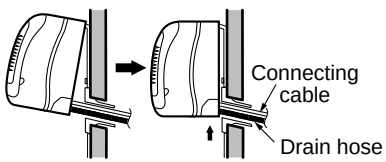

Press the lower left and right sides of the unit against the installation plate until the hooks engage into their slots(clicking sound).

3 Connection of the pipes-Outdoor

1. Align the center of the pipings and sufficiently tighten the flare nut by hand

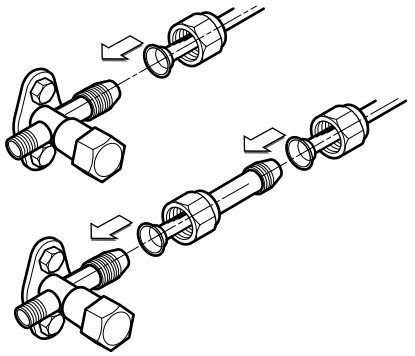

Outdoor unit

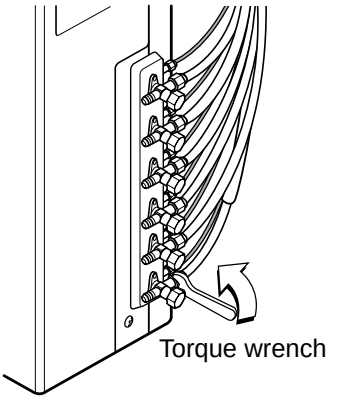

2. Finally, tighten the flare nut with torque wrench until the wrench clicks.

■ When tightening the flare nut with torque wrench, ensure the direction for tightening follows the arrow on the wrench.

Flare nut fastening torque	
Ø6.35mm (1/4")	1.8kg.mm
Ø9.52mm (3/8")	4.0kg.mm
Ø12.7mm (1/2")	5.5kg.mm
Ø15.88mm (5/8")	6.6kg.mm

REMOTE CONTROLLER INSTALLATION

1 Wireless Remote Controller Preparation

HOW TO MOUNT ONTO A WALL

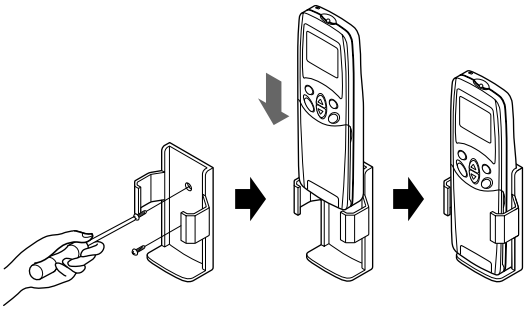

HOW TO INSERT BATTERIES

1. Remove the battery cover from the remote controller.
   - Slide the cover according to the arrow direction.
2. Insert the two batteries.
   - Be sure that the (+) and (-) directions are correct.
   - Be sure that both batteries are new.
3. Re-attach the cover.
   - Slide it back into position.



- Do not use rechargeable batteries, such batteries differ from standard dry cells in shape, dimensions, and performance.
- Romove the batteries from the remote controller if the air conditioner is not going to be used for some long time.

CONNECTING THE CABLE BETWEEN INDOOR UNIT AND OUTDOOR UNIT

1 Connection of cable

■ Room Type Indoor Unit

1. ***Remove the cover control from the unit by loosening the screw. Connect the wires to the terminals on the control board individually.***
2. ***Secure the cable onto the control board with the holder (clamper).***
3. ***Refix the cover control to the original position with the screw.***
4. ***Use a recongnized circuit breaker between the power source and the unit. A disconnection device to adequately disconnect all supply lines must be fitted.***

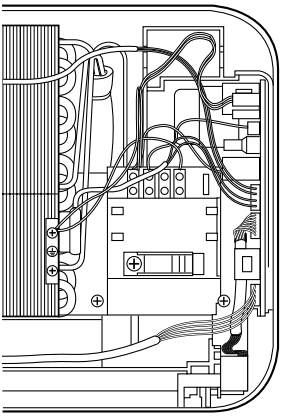

⚠ CAUTION

The power cord connected to the outdoor unit should be complied with the following specifications (Rubber insulation, type H05RN-F approved by HAR or SAA).

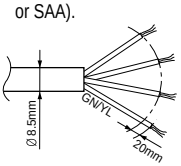

NORMAL CROSS-SECTIONAL AREA 3.5mm²

The connecting cable connected to the indoor and outdoor unit should be complied with the following specifications (Rubber insulation, type H05RN-F approved by HAR or SAA).

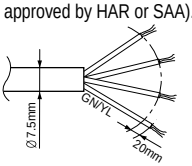

NORMAL CROSS-SECTIONAL AREA 0.75mm²

If the supply cord is damaged, it must be replaced by a special cord or assembly available from the manufacturer or its service agent.

⚠ WARNING

Make sure that the screws of the terminal are free from looseness.

2 Wiring Connection

• Open the control box cover and connect Indoor power wires.

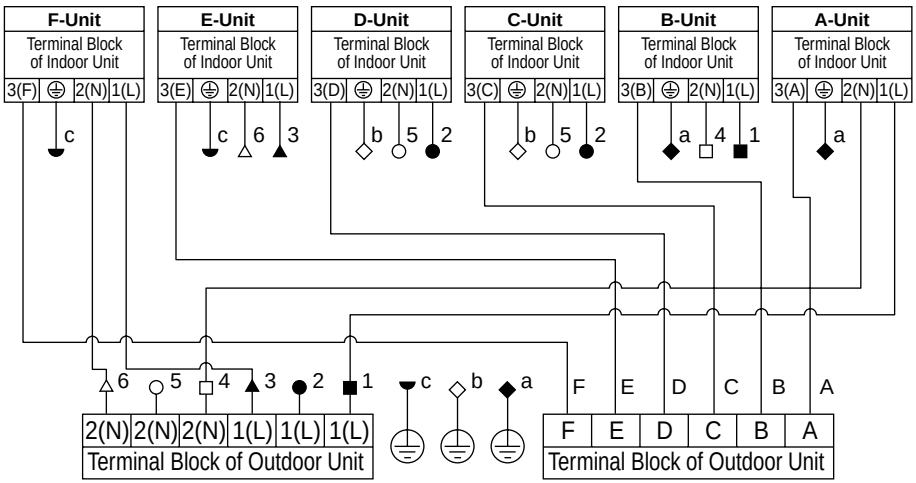

POWER INPUT
1Ø 220-240V 50Hz

Power Cord

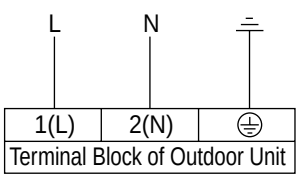

CAUTION

After the confirmation of the above conditions, prepare the wiring as follows:

1) Never fail to have an individual power specialized for the air conditioner. As for the method of wiring, be guided by the circuit diagram pasted on the inside of control box cover.

2) Provide a circuit breaker switch between power source and the unit.

3) The screw which fasten the wiring in the casing of electrical fittings are liable to come loose from vibrations to which the unit is subjected during the course of transportation. Check them and make sure that they are all tightly fastened. (If they are loose, it could give rise to burn-out of the wires.)

4) Specification of power source

5) Confirm that electrical capacity is sufficient.

6) Be sure that the starting voltage is maintained at more than 90 percent of the rated voltage marked on the name plate.

7) Confirm that the cable thickness is as specified in the power sources specification.
(Particularly note the relation between cable length and thickness.)

8) Never fail to equip a leakage breaker where it is wet or moist.

9) The following troubles would be caused by voltage drop-down.
- Vibration of a magnetic switch, damage on the contact point there of, fuse breaking, disturbance to the normal function of a overload protection device.
- Proper starting power is not given to the compressor.

3 ELECTRICAL WIRING

1. ***All wiring must comply with LOCAL REGULATIONS.***
2. ***Select a power source that is capable of supplying the current required by the air conditioner.***
3. ***Feed the power source to the unit via a distribution switch board designed for this purpose.***
4. ***The terminal screws inside the control box may be loose due to vibration during transport.***
   Check the screws for loose connection.
   (Running the air conditioner with loose connection can overload and damage electrical components.)
5. ***Always ground the air conditioner with a grounding wire and connector to meet the LOCAL REGULATION.***

CAUTION

If a power plug is not to be used, provide a circuit breaker between power source and the unit as shown below.

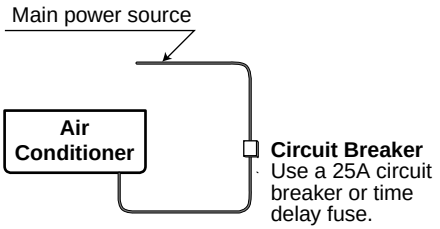

CHECKING THE DRAINAGE AND FORMING THE PIPINGS

1 Checking the drainage

1. To remove the front panel from the indoor unit, remove the front panel from the indoor unit cabinet.

- Set the air direction louvers up-and-down to the position(horizontally) by hand.
- Remove the securing screws that retain the front panel. Pull the lower left and right sides of the grille toward you and lift it off. (7K/9K Btu : 2EA, 12K/18K Btu : 3EA).

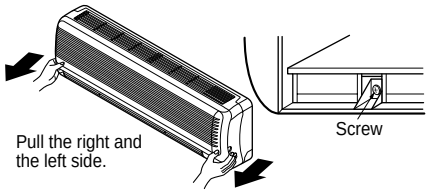

2. To check the drainage.

- Pour a glass of water on the evaporator.
- Ensure the water flows through the drain hose of the indoor unit without any leakage and goes out the drain exit.

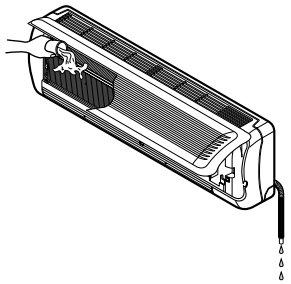

3. Drain piping

- The drain hose should point downward for easy drain flow.

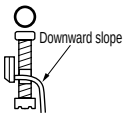

- Do not make drain piping.

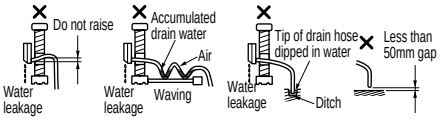

2 Form the piping

1. Form the piping by wrapping the connecting portion of the indoor unit with insulation material and secure it with two kinds of vinyl tapes.

- If you want to connect an additional drain hose, the end of the drain outlet should be routed above the ground. Secure the drain hose appropriately.

2. In cases where the outdoor unit is installed below the indoor unit perform the following.

- Tape the piping, drain hose and connecting cable from down to up.
- Secure the tapped piping along the exterior wall using saddle or equivalent

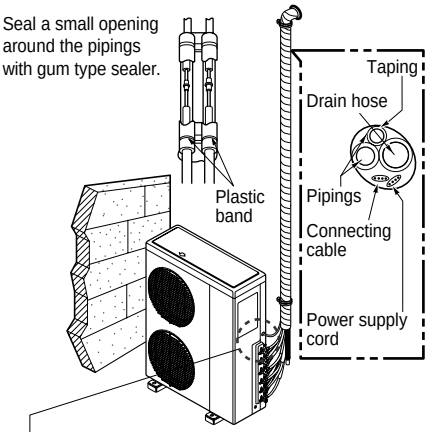

• Trap is required to prevent water from entering into electrical parts.

3. In cases where the Outdoor unit is installed above the Indoor unit perform the following.

- Tape the piping and connecting cable from down to up.
- Secure the taped piping along the exterior wall. Form a trap to prevent water entering the room.
- Fix the piping onto the wall by saddle or equivalent.

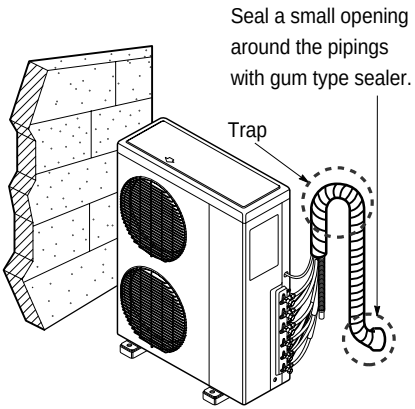

3 Heat Insulation

1. Use the heat insulation material for the refrigerant piping which has an excellent heat-resistance (over 120°C).

2. Precautions in high humidity circumstance:
This air conditioner has been tested according to the "KS Standard Conditions with Mist" and confirmed that there is not any default. However, if it is operated for a long time in high humid atmosphere (dew point temperature: more than 23°C), water drops are liable to fall. In this case, add heat insulation material according to the following procedure:

- Heat insulation material to be prepared... Adiabatic glass wool with thickness 10 to 20mm.
- Stick glass wool on all air conditioners that are located in ceiling atmosphere.
- In addition to the normal heat insulation (thickness: more than 8mm) for refrigerant piping (gas piping: thick piping) and drain piping, add further 10mm to 30mm thickness material.

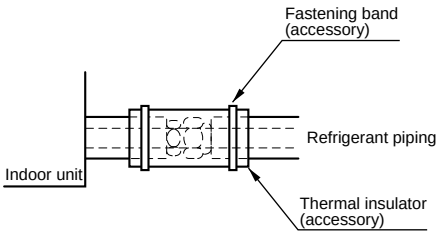

1. Check that all tubing and wiring have been properly connected.
2. Check that the gas and liquid side service valves are fully open.

1. Prepare remote control

❶ Remove the battery cover by pulling it according to the arrow direction.
❷ Insert new batteries making sure that the (+) and (–) of battery are installed correctly.
❸ Reattach the cover by pushing it back into position.

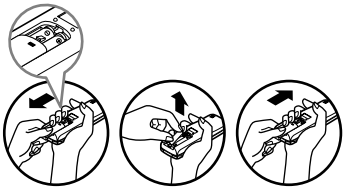

NOTE:

- Use 2 AAA(1.5volt) batteries. Do not use rechargeable batteries.
- Remove the batteries from the remote control if the system is not going to be used for a long time.

2. Precautions in test run

■ The initial power supply must provide at least 90% of the rated voltage.
Otherwise, the air conditioner should not be operated.
■ For test run, carry out the cooling operation firstly even during heating season. If heating operation is carried out firstly, it leads to the trouble of compressor. Then attention must be paid.

3. Settlement of outdoor unit

■ Anchor the outdoor unit with a bolt and nut(ø10mm) tightly and horizontally on a concrete or rigid mount.
■ When installing on the wall, roof or rooftop, anchor the mounting base securely with a nail or wire assuming the influence of wind and earthquake.
■ In the case when the vibration of the unit is conveyed to the hose, secure the unit with an anti-vibration rubber.

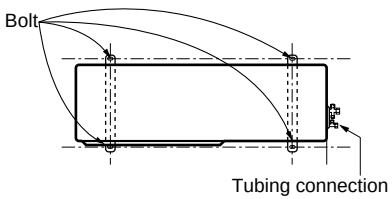

4. Evaluation of the performance

Operate unit for 15~20 minutes, then check the system refrigerant charge:

1. Measure the pressure of the gas side service valve.
2. Measure the temperature of the intake and discharge of air.
3. Ensure the difference between the intake temperature and the discharge is more than 8°C (Cooling) or reversely (Heating).

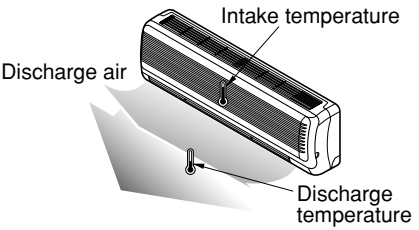

PUMP DOWN

This is performed when the unit is to be relocated or the refrigerant circuit is serviced.

Pump Down means collecting all refrigerant in the outdoor unit without loss in refrigerant gas.

CAUTION:

Be sure to perform Pump Down procedure with the unit cooling mode.

Pump Down Procedure

1. Connect a low-pressure gauge manifold hose to the charge port on the gas side service valve.
2. Open the gas side service valve halfway and purge the air from the manifold hose using the refrigerant gas.
3. Close the liquid side service valve(all the way in).
4. Turn on the unit's operating switch and start the cooling operation.
5. When the low-pressure gauge reading becomes 1 to 0.5kg/cm^2 G(14.2 to 7.1 P.S.I.G.), fully close the gas side valve stem and then quickly turn off the unit. At that time, Pump Down has been completed and all refrigerant gas will have been collected in the outdoor unit.