website http://www.lgservice.com
e-mail http://www.lgeservice.com/techsup.html

LG

ENGLISH
ITALIANO
ESPAÑOL
FRANÇAIS
DEUTSCH
PORTUGUESE

MULTI V™ System
Heat Pump Indoor Unit
INSTALLATION MANUAL

MODELS: CRNN-SR/ST Series
Type: Wall Mounted

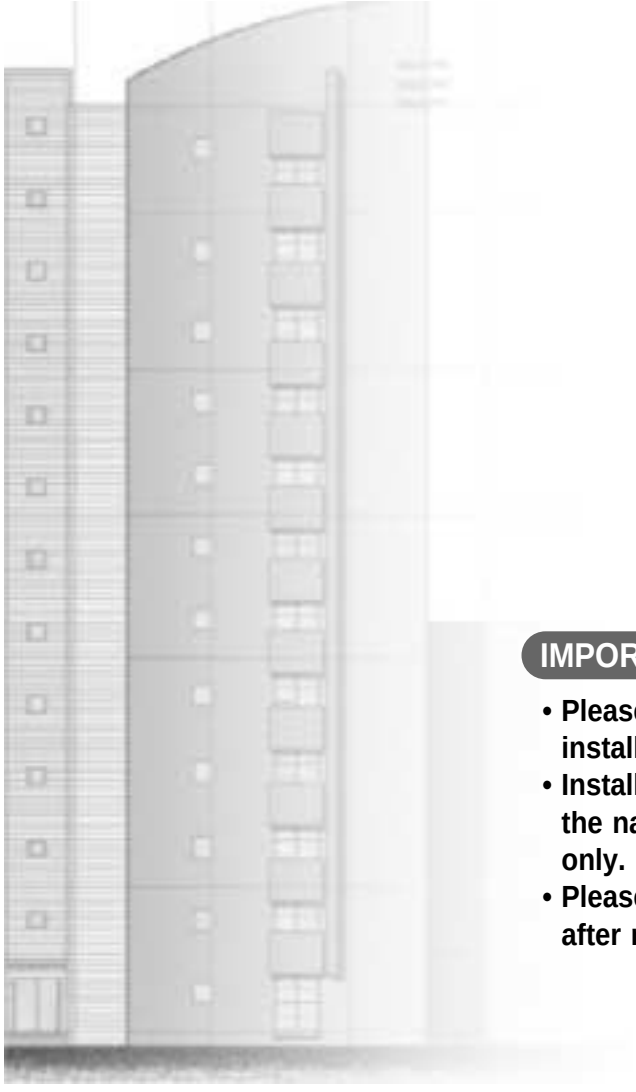

IMPORTANT

- **Please read this installation manual completely before installing the product.**
- **Installation work must be performed in accordance with the national wiring standards by authorized personnel only.**
- **Please retain this installation manual for future reference after reading it thoroughly.**

TABLE OF CONTENTS

Installation Requirements	Required Parts	Required Tools
Installation Parts 3		
Safety Precautions.....4		
Installation	❑ Installation guide map ❑ Four type "A" screws & plastic anchors ❑ Connecting cable	❑ Level gauge ❑ Screw driver ❑ Electric drill ❑ Hole core drill ❑ Horizontal meter
Selection the best location 7		
Piping Method.....8	❑ Pipes: Gas side Liquid side (Refer to Product Data) ❑ Insulation materials ❑ Additional drain pipe	❑ Flaring tool set ❑ Specified torque wrenches (different depending on model No.) ❑ Spanner .....Half union
Drain Piping 12		❑ A glass of water ❑ Screw driver
Wiring Connection.....12		
Installation of Remote Controller.....14		❑ Hexagonal wrench ❑ Gas-leak detector ❑ Vacuum pump ❑ Gauge manifold
	❑ Two type "B" screws	❑ Owner's manual ❑ Thermometer ❑ Holder Remote Controller

Installation Parts

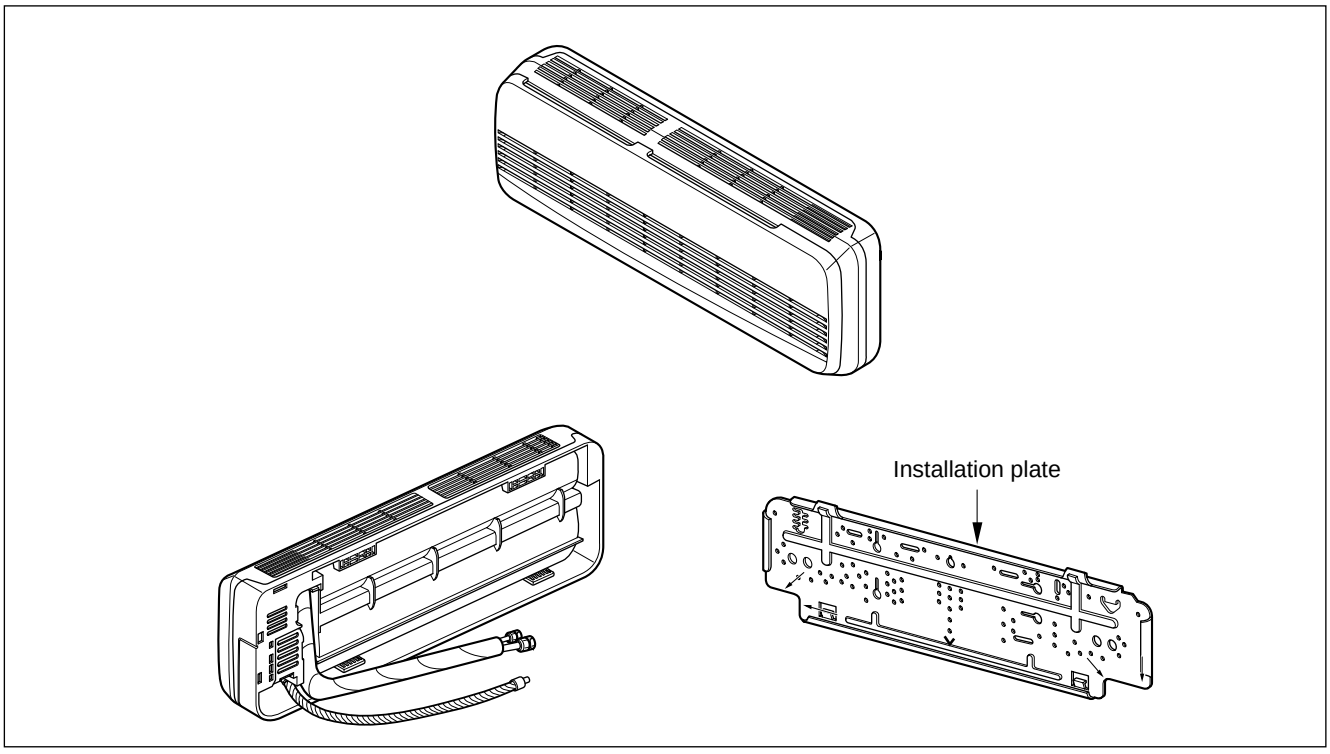

Installation plate	Type "A" screws and plastic anchors
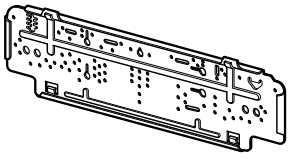	
Type "B" screws	Holder Remote Control
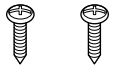	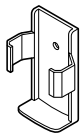

Safety Precautions

To prevent injury to the user or other people and property damage, the following instructions must be followed.

- Be sure to read before installing the air conditioner.
- Be sure to observe the cautions specified here as they include important items related to safety.
- Incorrect operation due to ignoring instruction will cause harm or damage. The seriousness is classified by the following indications.

⚠WARNING	This symbol indicates the possibility of death or serious injury.
⚠CAUTION	This symbol indicates the possibility of injury or damage to properties only.

- Meanings of symbols used in this manual are as shown below.

⃠	**Be sure not to do.**
❗	**Be sure to follow the instruction.**

⚠WARNING

■ Installation

Do not use a defective or under-rated circuit breaker. Use this appliance on a dedicated circuit.

• There is risk of fire or electric shock.

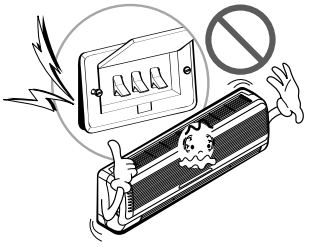

For electrical work, contact the dealer, seller, a qualified electrician, or an Authorized Service Center.

• Do not disassemble or repair the product. There is risk of fire or electric shock.



Always ground the product.

• There is risk of fire or electric shock.

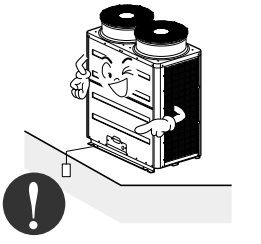

Install the panel and the cover of control box securely.

• There is risk of fire or electric shock.



Always install a dedicated circuit and breaker.

• Improper wiring or installation may cause fire or electric shock

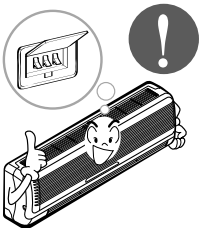

Use the correctly rated breaker or fuse.

• There is risk of fire or electric shock.

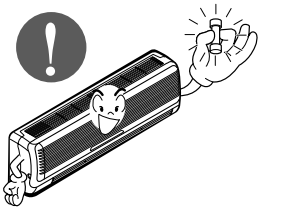

Do not modify or extend the power cable.

- There is risk of fire or electric shock.

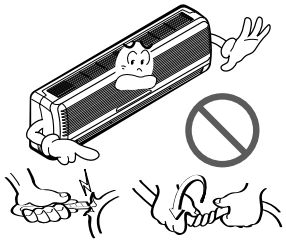

Do not let the air conditioner run for a long time when the humidity is very high and a door or a window is left open.

- Moisture may condense and wet or damage furniture.

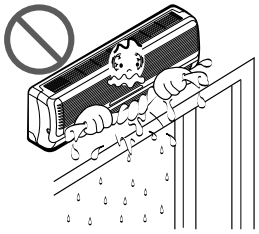

Be cautious when unpacking and installing the product.

- Sharp edges could cause injury. Be especially careful of the case edges and the fins on the condenser and evaporator.



For installation, always contact the dealer or an Authorized Service Center.

- There is risk of fire, electric shock, explosion, or injury.

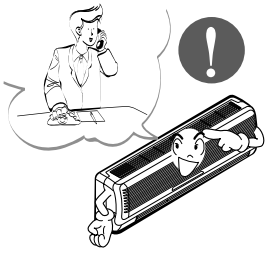

Do not install the product on a defective installation stand.

- It may cause injury, accident, or damage to the product.

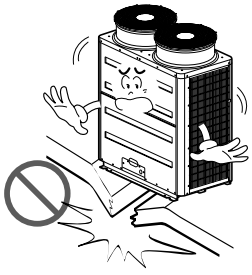

Be sure the installation area does not deteriorate with age.

- If the base collapses, the air conditioner could fall with it, causing property damage, product failure, and personal injury.

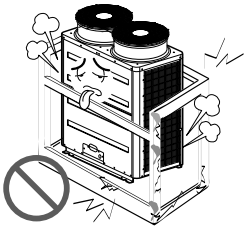

■ Operation

Do not store or use flammable gas or combustibles near the product.

- There is risk of fire or failure of product.



⚠CAUTION

■ Installation

Always check for gas (refrigerant) leakage after installation or repair of product.

• Low refrigerant levels may cause failure of product.

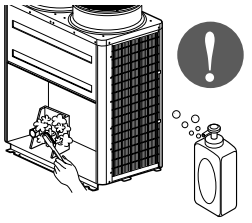

Install the drain hose to ensure that water is drained away properly.

• A bad connection may cause water leakage.

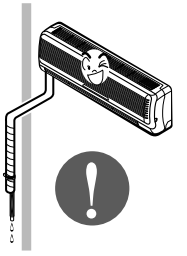

Keep level even when installing the product.

• To avoid vibration or water leakage.

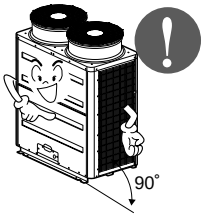

Do not install the product where the noise or hot air from the outdoor unit could damage the neighborhoods.

• It may cause a problem for your neighbors.



Use two or more people to lift and transport the product.

• Avoid personal injury.



Do not install the product where it will be exposed to sea wind (salt spray) directly.

• It may cause corrosion on the product. Corrosion, particularly on the condenser and evaporator fins, could cause product malfunction or inefficient operation.

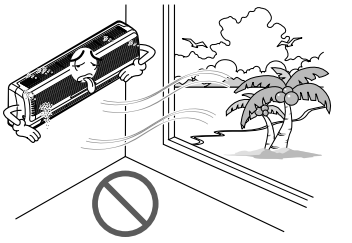

Installation

Read completely, then follow step by step.

Selection of the best location

- There should not be any heat source or steam near the unit.
- There should not be any obstacles to prevent the air circulation.
- A place where air circulation in the room will be good.
- A place where drainage can be easily obtained.
- A place where noise prevention is taken into consideration.
- Do not install the unit near the door way.
- Ensure the spaces indicated by arrows from the wall, ceiling, fence, or other obstacles.

The mounting wall should be strong and solid enough to protect it from the vibration.

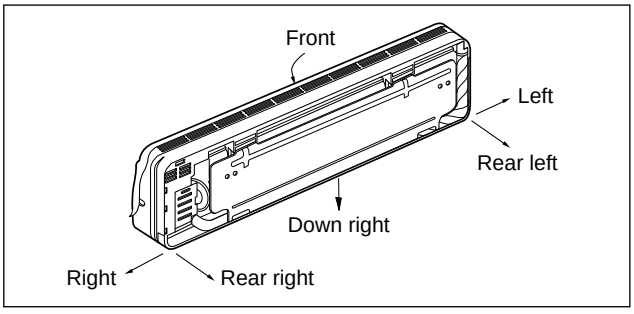

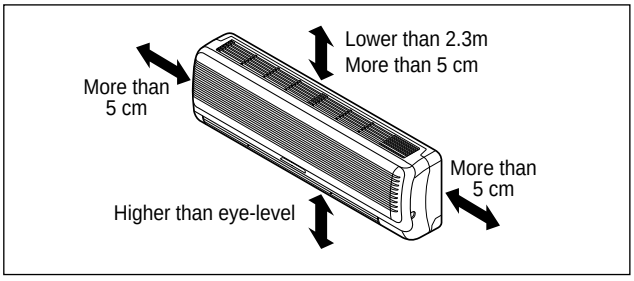

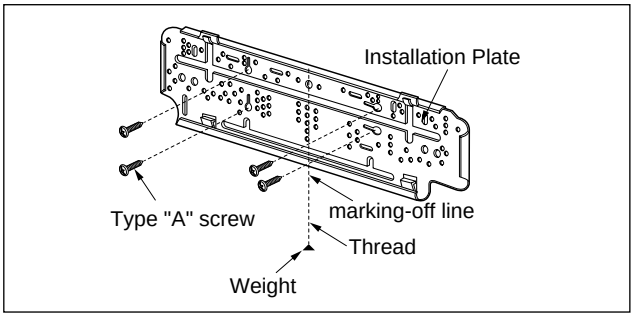

1) Mount the installation plate on the wall with four Type "A" screws.

(If mounting the unit on the concrete wall, consider using anchor bolts.)

- Always mount the Installation plate horizontally by aligning the marking-off line by means of the thread and a level.

The lower left and the right side of Installation Plate

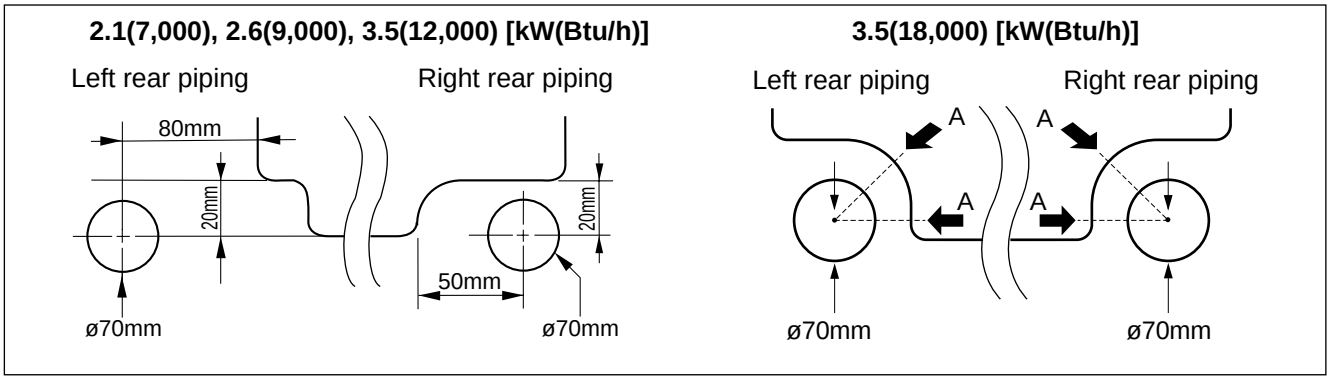

CAUTION : In case that the unit is installed near the sea, the installation parts may be corroded by salt. The installation parts (and the unit) should be taken appropriate anti-corrosion measures.

Piping Method

■ Preparing the indoor unit's piping and drain hose for installation through the wall.
■ Remove the plastic tubing retainer(see illustration below) and pull the tubing and drain hose away from chassis.
■ Replace the plastic tubing holder in the original position.

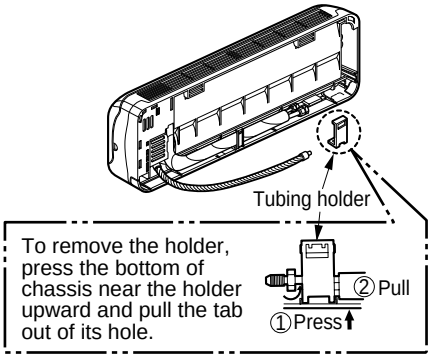

⚠ CAUTION : When install, make sure that the remaining parts must be removed clearly so as not to damage the piping and drain hose, especially power cord and connecting cable.

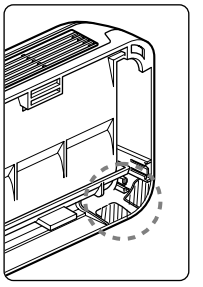

For left rear piping

1. Route the indoor tubing and the drain hose in the direction of rear left.

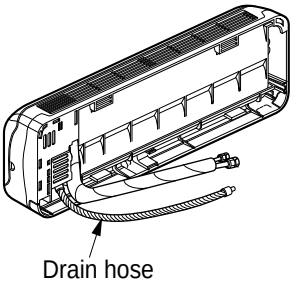

2. Insert the connecting cable into the indoor unit from the outdoor unit through the piping hole.
■ Do not connect the cable to the indoor unit.
■ Make a small loop with the cable for easy connection later.

3. Tape the tubing, drain hose and the connecting cable. Be sure that the drain hose is located at the lowest side of the bundle. Locating at the upper side can cause drain pan to overflow inside the unit.

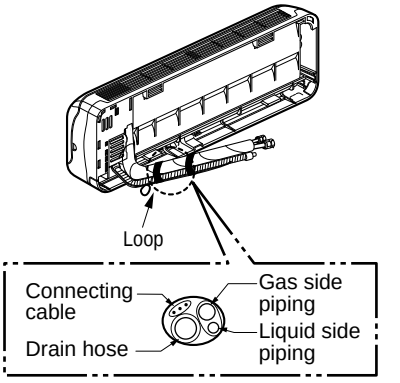

NOTICE : If the drain hose is routed inside the room, insulate the hose with an insulation material* so that dripping from "sweating"(condensation) will not damage furniture or floors.

*Foamed polyethylene or equivalent is recommended.

4. Indoor unit installation
■ Hook the indoor unit onto the upper portion of the installation plate.(Engage the two hooks of the rear top of the indoor unit with the upper edge of the installation plate.) Ensure that the hooks are properly seated on the installation plate by moving it left and right.

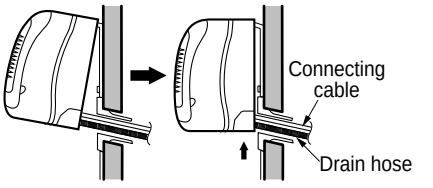

Press the lower left and right sides of the unit against the installation plate until the hooks engage into their slots(clicking sound).

5. Connecting the pipings to the indoor unit and drain hose to drain pipe.
■ Align the center of the pipings and sufficiently tighten the flare nut by hand.

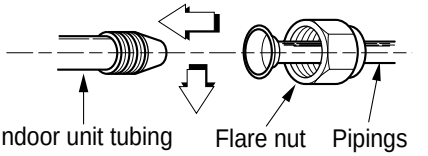

■ Tighten the flare nut with a wrench.

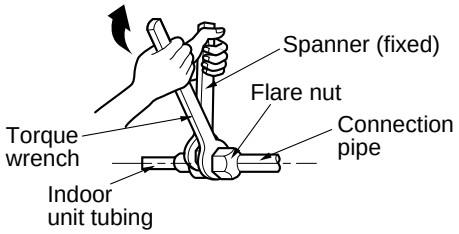

Pipe Size[Torque]	
GAS	LIQUID
Ø12.7[5.5kg·m]	Ø6.35[1.8kg·m]
Ø15.88[6.6kg·m]	Ø9.52[4.2kg·m]

■ When extending the drain hose at the indoor unit, install the drain pipe.

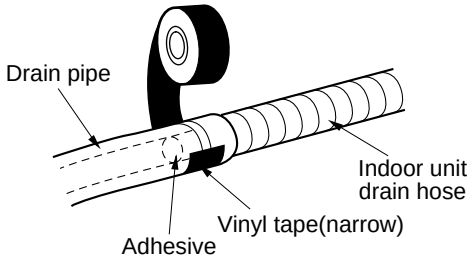

6. Wrap the insulation material around the connecting portion.

■ Overlap the connection pipe insulation material and the indoor unit pipe insulation material. Bind them together with vinyl tape so that there is no gap.

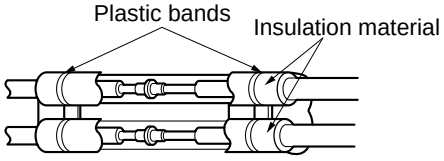

■ Wrap the area which accommodates the rear piping housing section with vinyl tape.

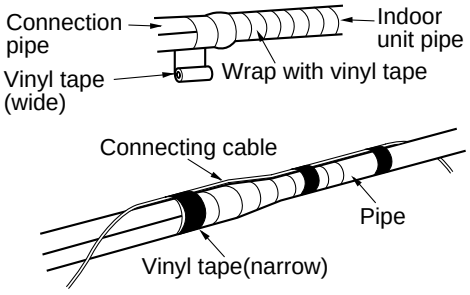

■ Bundle the piping and drain hose together by wrapping them with vinyl tape over the range within which they fit into the rear piping housing section.

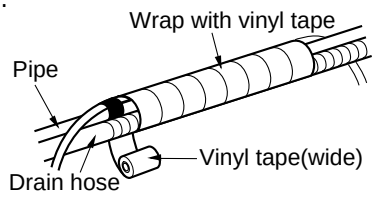

For right rear piping

1. Route the indoor tubing and the drain hose to the required piping hole position.

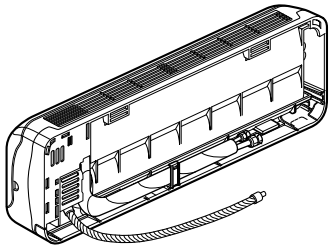

2. Insert the piping, drain hose and the connecting cable into the piping hole.

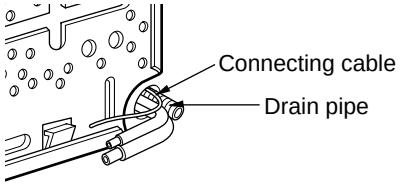

3. Insert the connecting cable into the indoor unit.

■ Don't connect the cable to the indoor unit.

■ Make a small loop with the cable for easy connection later.

4. Tape the drain hose and the connecting cable.

• Connecting cable

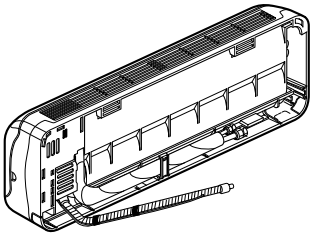

5. Indoor unit installation

■ Hang the indoor unit from the hooks at the top of the installation plate.

■ Insert the spacer etc. between the indoor unit and the installation plate and separate the bottom of the indoor unit from the wall.

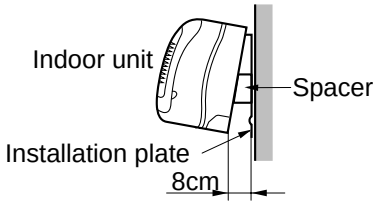

6. Connecting the pipings to the indoor unit and the drain hose to drain pipe.

■ Align the center of the pipings and sufficiently tighten the flare nut by hand.

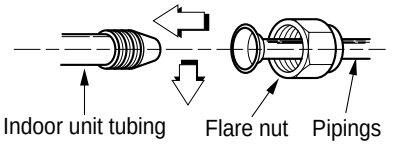

■ Tighten the flare nut with a wrench.

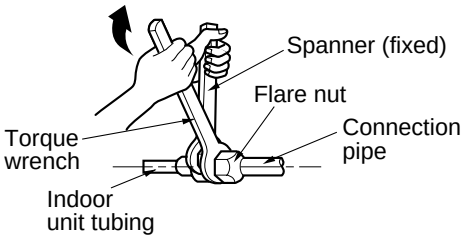

Pipe Size[Torque]	
GAS	LIQUID
Ø12.7[5.5kg·m]	Ø6.35[1.8kg·m]
Ø15.88[6.6kg·m]	Ø9.52[4.2kg·m]

■ When extending the drain hose at the indoor unit, install the drain pipe.

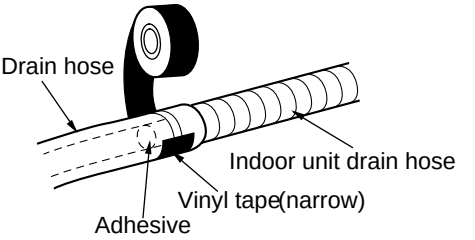

7. Wrap the insulation material around the connecting portion.

■ Overlap the connection pipe heat insulation and the indoor unit pipe heat insulation material. Bind them together with vinyl tape so that there is no gap.

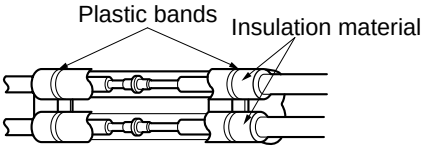

■ Wrap the area which accommodates the rear piping housing section with vinyl tape.

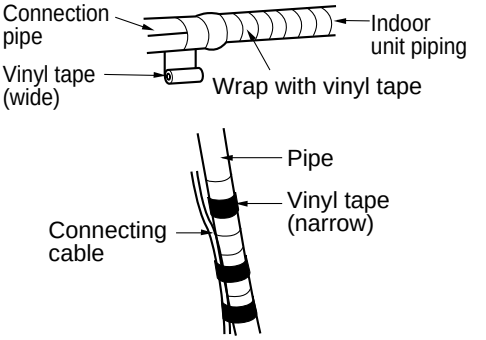

■ Bundle the piping and drain hose together by wrapping them with cloth tape over the range within which they fit into the rear piping housing section.

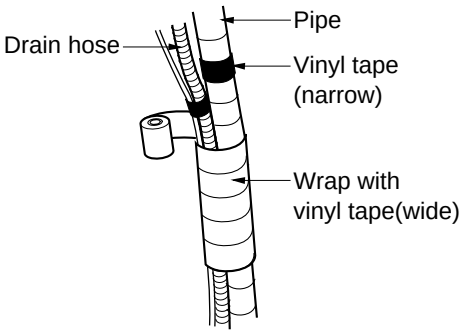

8. Reroute the pipings and the drain hose across the back of the chassis.

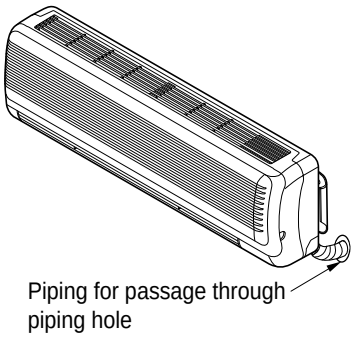

9. Set the pipings and the drain hose to the back of the chassis with the tubing holder.

■ Hook the edge of tubing holder to tap on chassis and push the bottom of tubing holder to be engaged at the bottom of chassis.

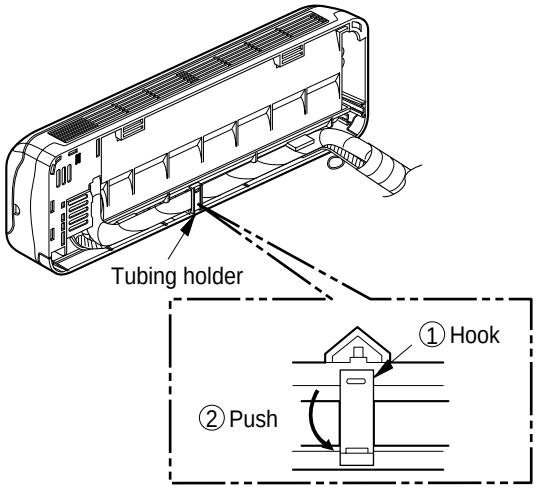

10. Indoor unit installation

■ Remove the spacer.

■ Ensure that the hooks are properly seated on the installation plate by moving it left and right.

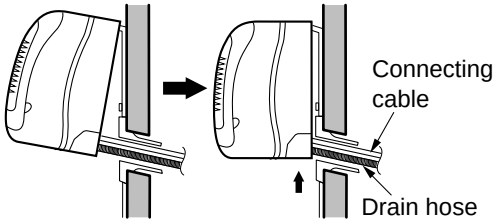

Press the lower left and right sides of the unit against the installation plate until the hooks engage into their slots(clicking sound).

Drain Piping

1. To remove the front panel from the indoor unit, remove the front panel from the indoor unit cabinet.

- ■ Set the air direction louvers up-and-down to the position(horizontally) by hand.
- ■ Remove the securing screws that retain the front panel. Pull the lower left and right sides of the grille toward you and lift it off.
  (2.1/7, 2.6/9, 3.5/12 kW/Btu models: 2EA,
  3.5/18 kW/Btu models: 3EA)

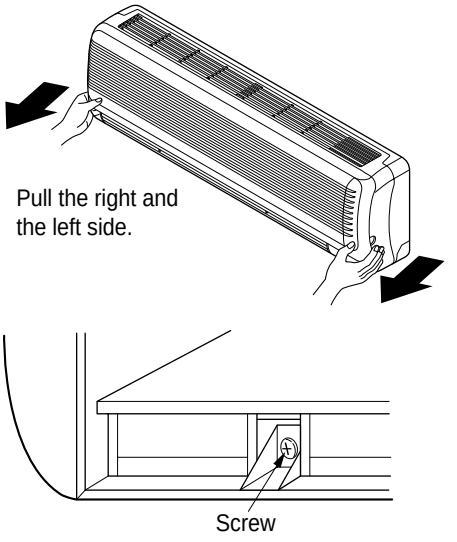

2. To check the drainage.

- ■ Pour a glass of water on the evaporator.
- ■ Ensure the water flows through the drain hose of the indoor unit without any leakage and goes out the drain exit.

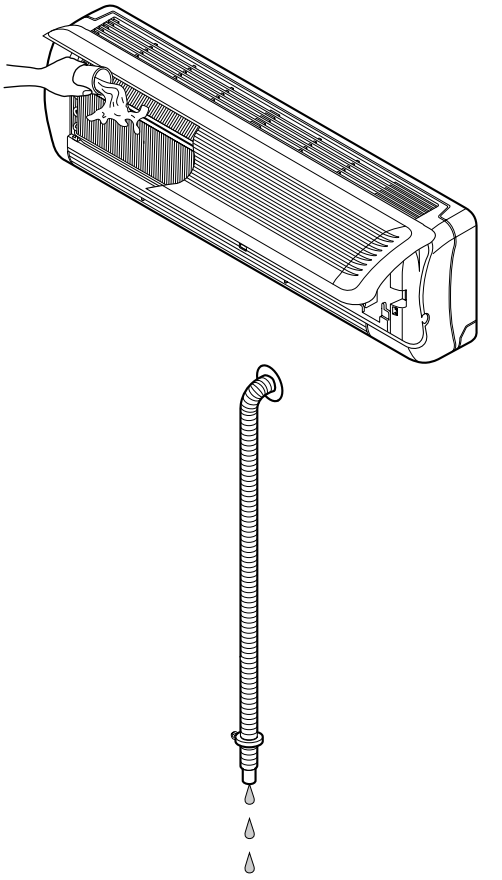

Wiring Connection

1) Connect the wires to the terminals on the control board individually according to the outdoor unit connection.

- Ensure that the color of the wires of outdoor unit and the terminal No. are the same as those of indoor unit respectively.

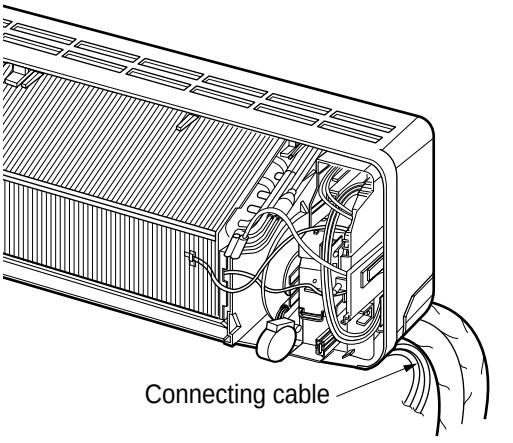

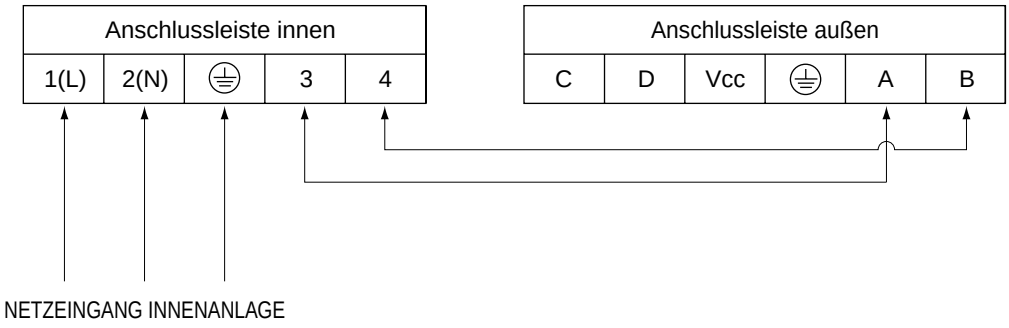

2) Attach the Grille onto the cabinet.

- Grasp lower the left and right side of the Grille and engage four tabs on the top inside edge of the chassis.
- Press the Grille toward the chassis until it will be back into place.

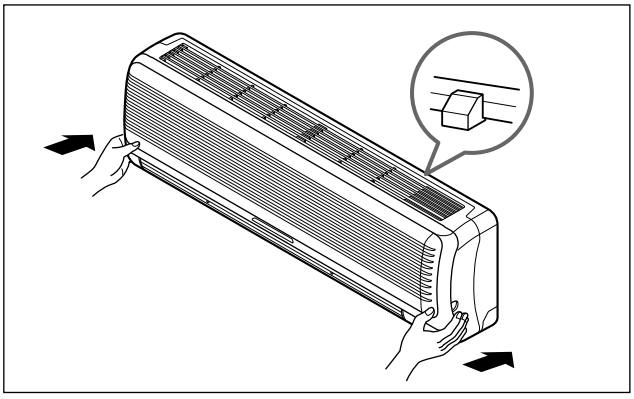

CAUTION:

After the confirmation of the above conditions, prepare the wiring as follows:

1) Never fail to have an individual power circuit specifically for the air conditioner. As for the method of wiring, be guided by the circuit diagram posted on the inside of control cover.

2) The screw which fasten the wiring in the casing of electrical fittings are liable to come loose from vibrations to which the unit is subjected during the course of transportation. Check them and make sure that they are all tightly fastened. (If they are loose, it could cause burn-out of the wires.)

3) Specification of power source.

4) Confirm that electrical capacity is sufficient.

5) See to that the starting voltage is maintained at more than 90 percent of the rated voltage marked on the name plate.

6) Confirm that the cable thickness is as specified in the power source specification. (Particularly note the relation between cable length and thickness.)

7) In a wet or moist area, always install an earth leakage circuit breaker.

8) The following would be caused by voltage drop.

- Vibration of a magnetic switch, which will damage the contact point, fuse breaking, disturbance of the normal function of the overload.

9) The means for disconnection from a power supply shall be incorporated in the fixed wiring and have an air gap contact separation of at least 3mm in each active(phase) conductors.

Installation of Remote Controller

HOW TO MOUNT ONTO A WALL

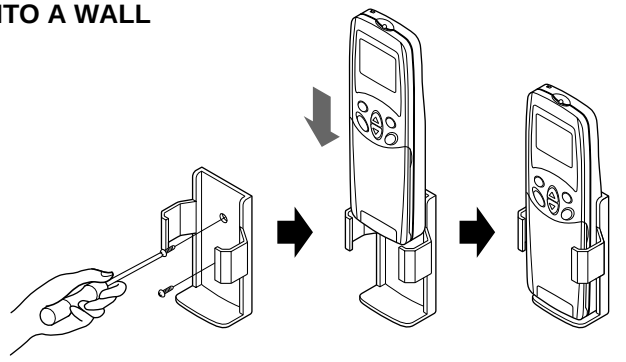

HOW TO INSERT BATTERIES

1. Remove the battery cover from the remote controller.
   • Slide the cover according to the arrow direction.

2. Insert the two batteries.
   • Be sure that the (+) and (-) directions are correct.
   • Be sure that both batteries are new.

3. Re-attach the cover.
   • Slide it back into position.



- Do not use rechargeable batteries, such batteries differ from standard dry cells in shape, dimensions, and performance.
- Romove the batteries from the remote controller if the air conditioner is not going to be used for some long time.