website http://www.lgservice.com
e-mail http://www.lgeservice.com/techsup.html

LG

ENGLISH
ITALIANO
ESPAÑOL
FRANÇAIS
DEUTSCH
PORTUGUESE

MULTI V™ System
Heat Pump Indoor Unit
INSTALLATION MANUAL

Models: CRNN-SP Series
Type: Art Cool

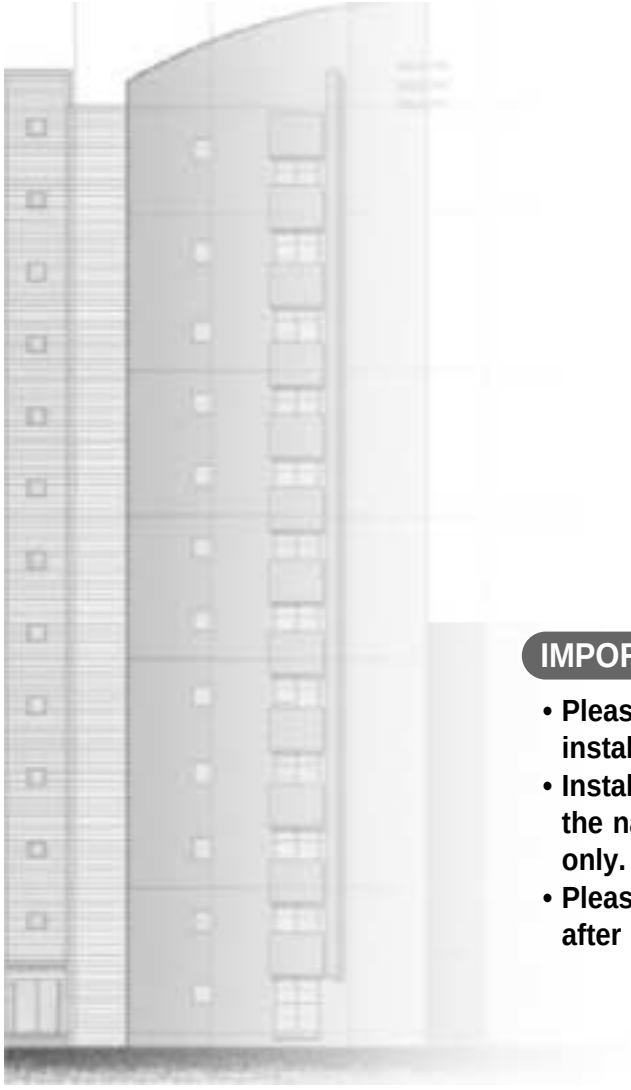

IMPORTANT

- **Please read this installation manual completely before installing the product.**
- **Installation work must be performed in accordance with the national wiring standards by authorized personnel only.**
- **Please retain this installation manual for future reference after reading it thoroughly.**

TABLE OF CONTENTS

Installation Requirements	Required Parts	Required Tools
Installation Parts 3		
Safety Precautions 4		
Installation	❏ Installation guide map ❏ Four type "A" screws & plastic anchors ❏ Connecting cable	❏ Level gauge ❏ Screw driver ❏ Electric drill ❏ Hole core drill ❏ Horizontal meter
Selection the best location 7		
Preparing Work for Installation 8		
Sticking the Installation Guide Mapand Fixing indoor Unit 9	❏ Pipes: Gas side Liquid side (Refer to Product Data) ❏ Insulation materials ❏ Additional drain pipe	❏ Flaring tool set ❏ Specified torque wrenches (different depending on model No.) ❏ Spanner .....Half union
Connection of Piping 10		
Drain Piping 11		❏ A glass of water ❏ Screw driver ❏ Hexagonal wrench ❏ Gas-leak detector ❏ Vacuum pump ❏ Gauge manifold
Front Panel Assembly 12		
Wiring Connection 13		
Installation of Remote Controller.....14	❏ Two type "B" screws	❏ Owner's manual ❏ Thermometer ❏ Holder Remote Controller

Installation Parts

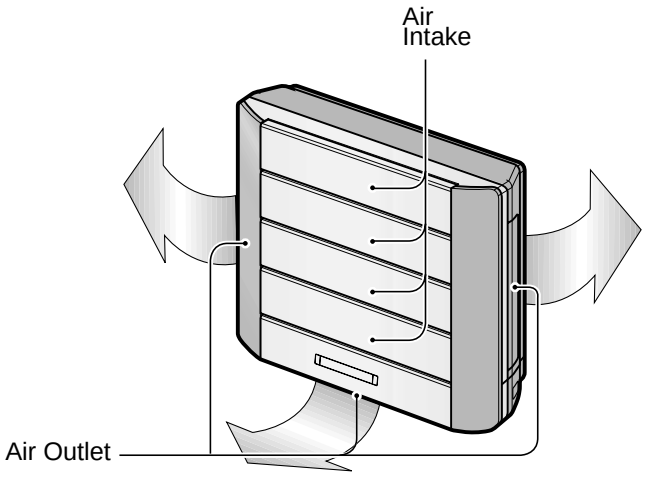

Name	Installation guide map	Securing screws	(Other)
Quantity	1 EA	2 EA	
Shape	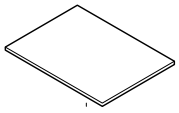	 M4 x 12L	• Owner's manual • Installation manual

Safety Precautions

To prevent injury to the user or other people and property damage, the following instructions must be followed.

■ Be sure to read before installing the air conditioner.

■ Be sure to observe the cautions specified here as they include important items related to safety.

■ Incorrect operation due to ignoring instruction will cause harm or damage. The seriousness is classified by the following indications.

⚠WARNING	This symbol indicates the possibility of death or serious injury.
⚠CAUTION	This symbol indicates the possibility of injury or damage to properties only.

■ Meanings of symbols used in this manual are as shown below.

⃠	**Be sure not to do.**
❗	**Be sure to follow the instruction.**

⚠WARNING

■ Installation

Do not use a defective or under-rated circuit breaker. Use this appliance on a dedicated circuit.

• There is risk of fire or electric shock.

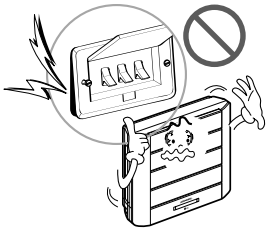

For electrical work, contact the dealer, seller, a qualified electrician, or an Authorized Service Center.

• Do not disassemble or repair the product. There is risk of fire or electric shock.



Always ground the product.

• There is risk of fire or electric shock.

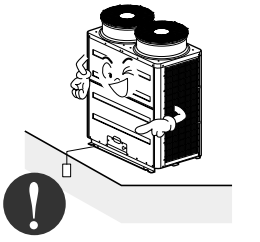

Install the panel and the cover of control box securely.

• There is risk of fire or electric shock.



Always install a dedicated circuit and breaker.

• Improper wiring or installation may cause fire or electric shock.

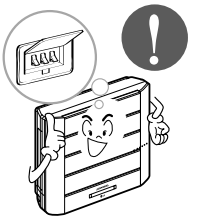

Use the correctly rated breaker or fuse.

• There is risk of fire or electric shock.

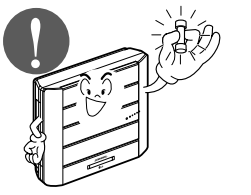

Do not modify or extend the power cable.

- There is risk of fire or electric shock.

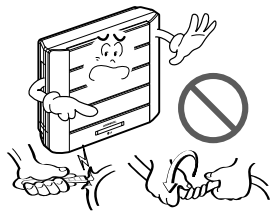

Do not let the air conditioner run for a long time when the humidity is very high and a door or a window is left open.

- Moisture may condense and wet or damage furniture.

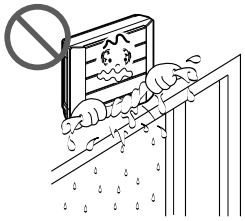

Be cautious when unpacking and installing the product.

- Sharp edges could cause injury. Be especially careful of the case edges and the fins on the condenser and evaporator.

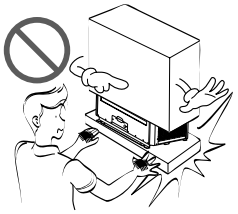

For installation, always contact the dealer or an Authorized Service Center.

- There is risk of fire, electric shock, explosion, or injury.



Do not install the product on a defective installation stand.

- It may cause injury, accident, or damage to the product.

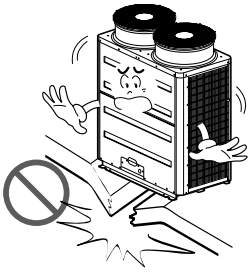

Be sure the installation area does not deteriorate with age.

- If the base collapses, the air conditioner could fall with it, causing property damage, product failure, and personal injury.

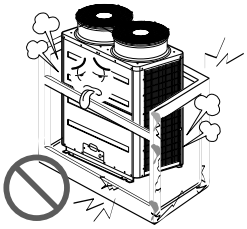

■ Operation

Do not store or use flammable gas or combustibles near the product.

- There is risk of fire or failure of product.



⚠CAUTION

■ Installation

Always check for gas (refrigerant) leakage after installation or repair of product.

• Low refrigerant levels may cause failure of product.

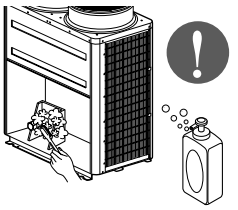

Install the drain hose to ensure that water is drained away properly.

• A bad connection may cause water leakage.

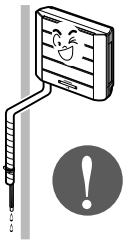

Keep level even when installing the product.

• To avoid vibration or water leakage.

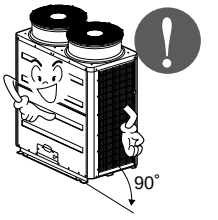

Do not install the product where the noise or hot air from the outdoor unit could damage the neighborhoods.

• It may cause a problem for your neighbors.



Use two or more people to lift and transport the product.

• Avoid personal injury.



Do not install the product where it will be exposed to sea wind (salt spray) directly.

• It may cause corrosion on the product. Corrosion, particularly on the condenser and evaporator fins, could cause product malfunction or inefficient operation.

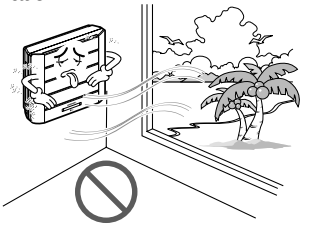

Installation

Read completely, then follow step by step.

Selection of the best location

- Do not have any heat or steam near the unit.
- Select a place where there are no obstacles in front of the unit.
- Make sure that condensation drainage can be conveniently routed away.
  Do not install near a doorway.
- Ensure that the space around the left and right of the unit is more than 50cm. The unit should be installed as high on the wall as possible, allowing a minimum of 10cm from ceiling.
- Use a stud finder to locate studs to prevent unnecessary damage to the wall.

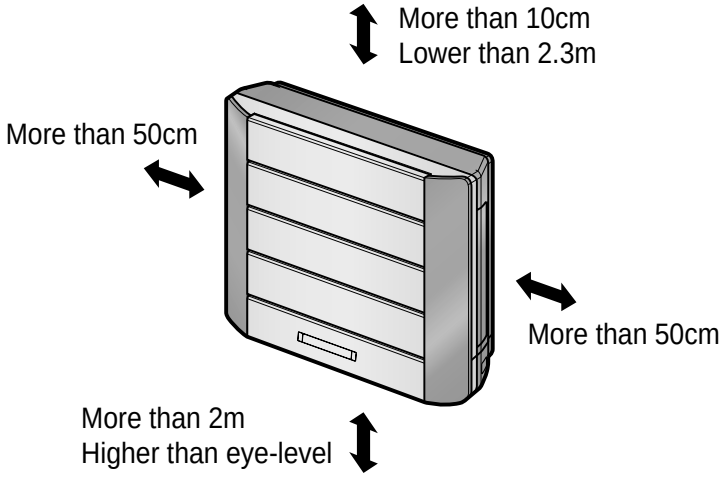

CAUTION : In case that the unit is installed near the sea, the installation parts may be corroded by salt. The installation parts (and the unit) should be taken appropriate anti-corrosion measures.

Preparing Work for Installation

The wall you select should be strong and solid enough to prevent vibration

1) Open panel front

- First pull down the grille bottom, then remove screws(2 pieces), and close grille bottom again.
- The moment of lifting the both lower parts of panel front, you can hear sound this panel came out. In this time panel front is separated
- After pulling down this panel a bit, separate connecting wire with product.

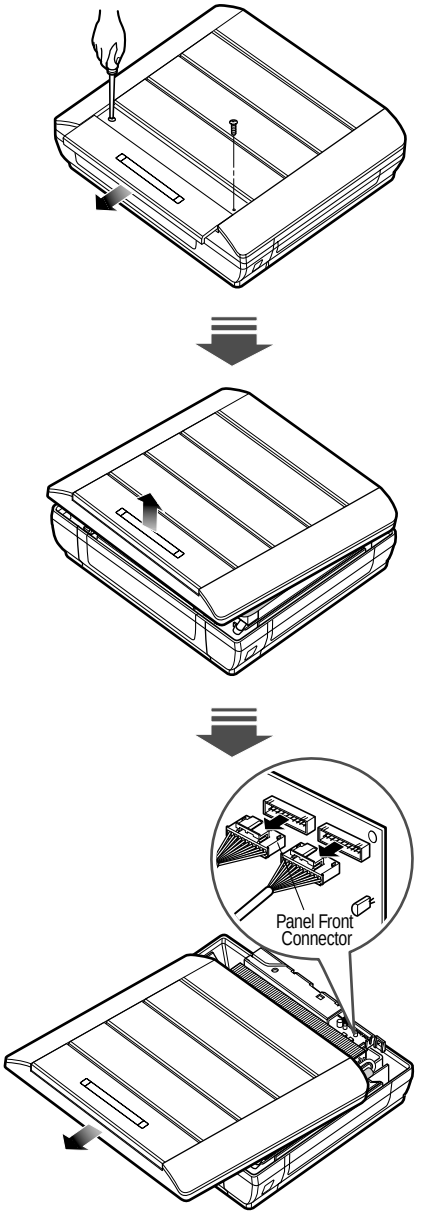

2) Cover pipe and cover side remove

- Remove two screws.(for fixing cover pipe)
- Pull up the cover side of desired connecting direction, then cover side is separated.
- In case connecting direction is left or right, path through the hole of cover side.
  (When path through the hole, take care of burr.)

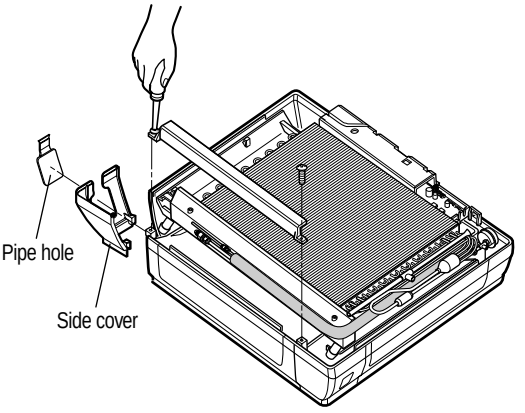

NOTICE When connecting pipe path through rear wall, don't remove the hole.

3) Drain hose junction

- Remove the rubber stopple of desired drain direction.
- As the following picture, insert drain hose in the handle of drain pan, and join drain hose and connecting hose.

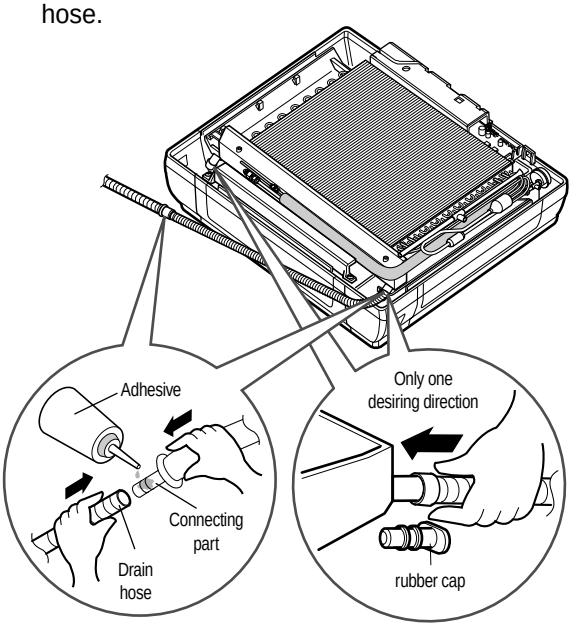

Sticking the Installation Guide Map and Fixing Indoor Unit

1) Put an Installation Guide Map on the desired surface.

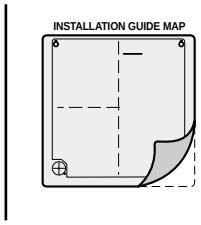

2) Look at suited horizon by horizontal meter on the horizontal setting line, and fix lightly the map by adhesive tape.

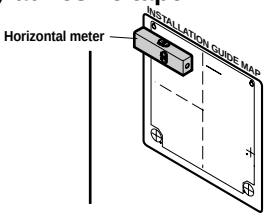

3) Make a hole with diameter of 6mm and depth of

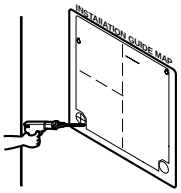

4) Drill the piercing part for connecting pipe as diameter 50mm. (In case of piercing rear surface)

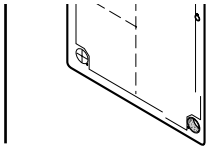

5) Drive the plastic anchors into drilled points.

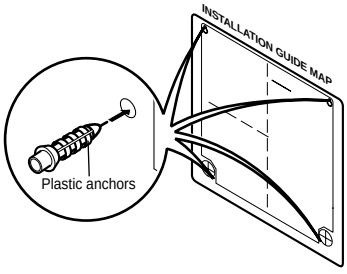

6) First, drive the two points of the upper parts by screws. (Leave 10mm for hanging product)

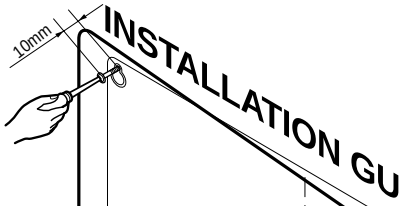

7) Hang the hole of product at the upper screws. (In this time, remove the map)
(Falling attention)

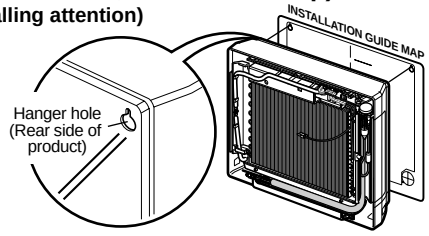

8) Drive the lower parts after facing the hole of product with plastic anchors, and fix completely the upper screws.

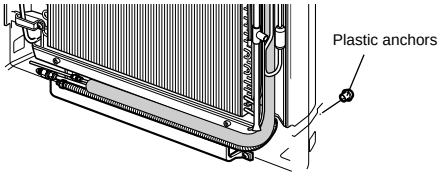

9) Check the fixed product with light power.

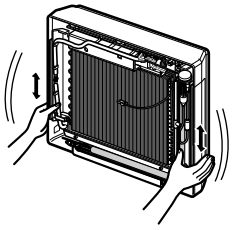

10) Drive the lower parts after facing the hole of product with plastic anchors, and fix completely the upper screws.

Connection of Piping

• Preparing the indoor unit's piping and drain hose for installation through the wall.

1) Route the indoor tubing and the drain hose in the direction of rear left or right.

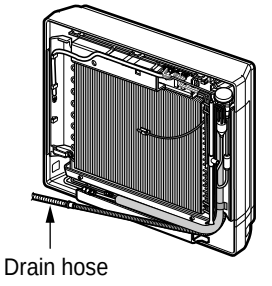

2) Tape the tubing, drain hose, and the connecting cable. Be sure that the drain hose is located at the lowest side of the bundle. Locating at the upper side can cause drain pan to overflow inside the unit.

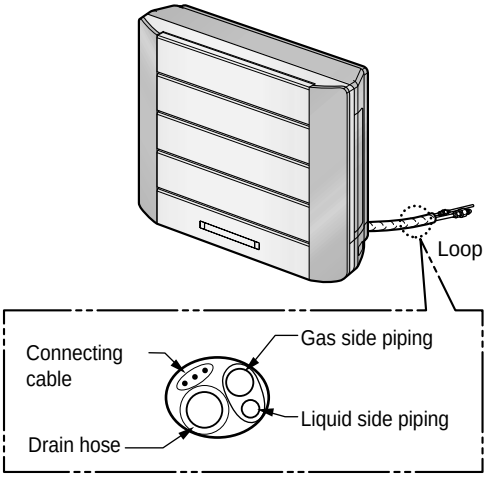

NOTICE If the drain hose is routed inside the room, insulate the hose with an insulation material* so that dripping from "sweating"(condensation) will not damage furniture or floors.

*Foamed polyethylene or equivalent is recommended.

3) Connecting the pipings to the indoor unit and drain hose to drain pipe.

• Align the center of the pipes and sufficiently tighten the flare nut by hand.

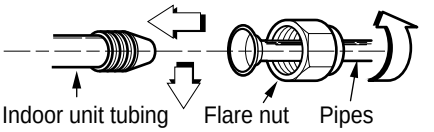

• Tighten the flare nut with a wrench.

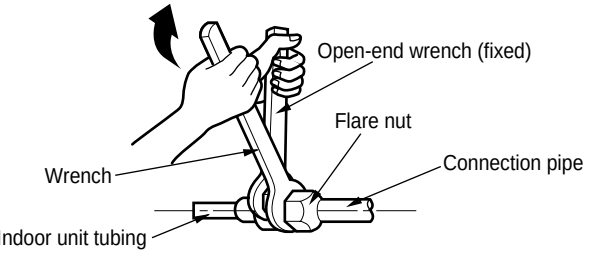

Pipe Size[Torque]	
GAS	LIQUID
Ø12.7[5.5kg·m]	Ø6.35[1.8kg·m]
Ø15.88[6.6kg·m]	Ø9.52[4.2kg·m]

• When extending the drain hose at the indoor unit, install the drain pipe.

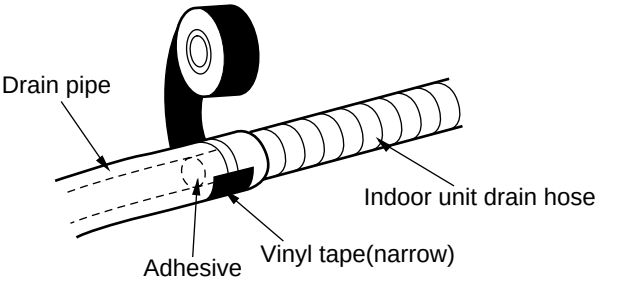

4) Wrap the insulation material around the connecting portion.

• Overlap the connection pipe insulation material and the indoor unit pipe insulation material. Bind them together with vinyl tape so that there is no gap.

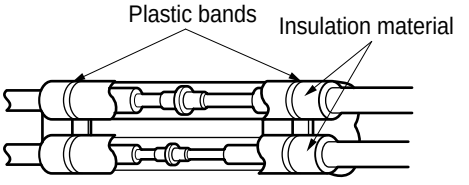

• Wrap the area which accommodates the rear piping housing section with vinyl tape.

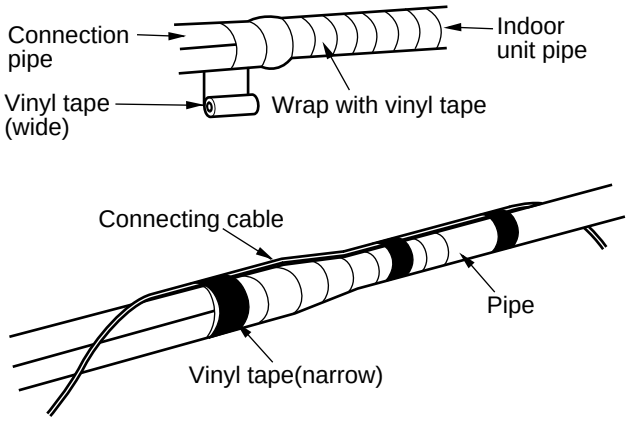

• Bundle the piping and drain hose together by wrapping them with vinyl tape for enough to cover where they fit into the rear piping housing section.

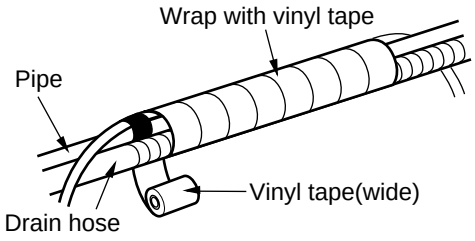

Drain Piping

1) To check the drainage.

• Pour a glass of water on the evaporator.

• Ensure the water flows through the drain hose of the indoor unit without any leakage and goes out the drain exit.

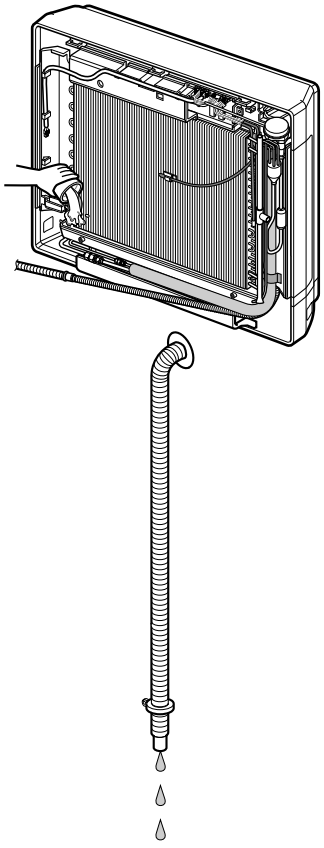

2) Drain piping

• The drain hose should point downward for easy drain flow.

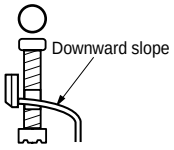

• Do not make drain piping.

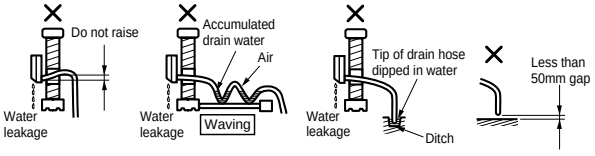

Front Panel Assembly

1) First, check the side cover assembly exactly.

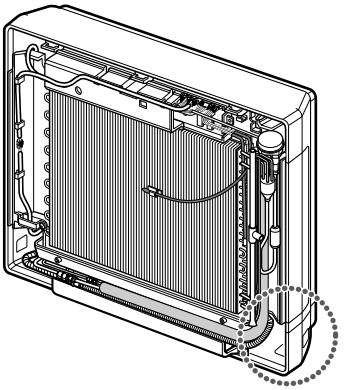

2) Assemble connecting lead wire with control and first fix the upper part of panel front, then match the lower part of panel front

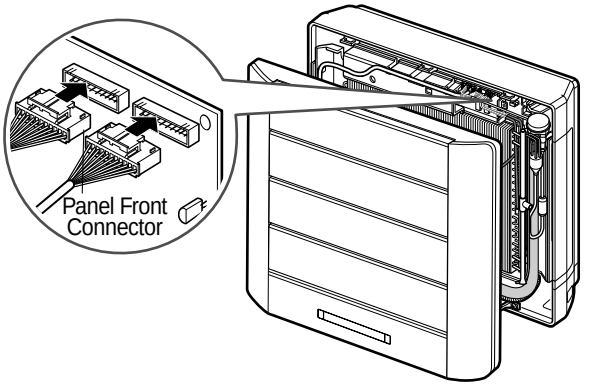

3) Drive two screws.

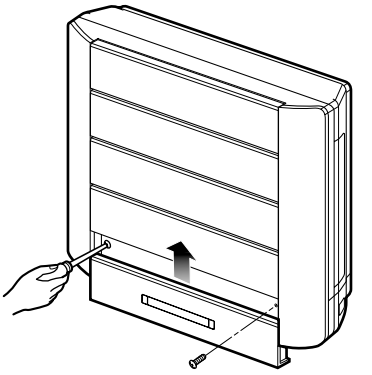

Wiring Connection

- **Connect the cable to the indoor unit by connecting the wires to the terminals on the control board individually according to the outdoor unit connection.** (Ensure that the color of the wires of the outdoor unit and the terminal No. are the same as those of the indoor unit.)
  The earth wire should be longer than the common wires.

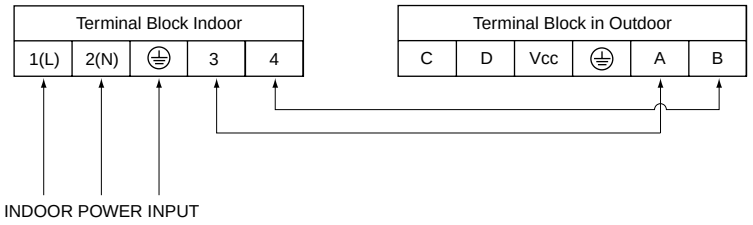

- When installing, refer to the circuit diagram on the Control Box of Indoor Unit.
- When installing, refer to the wiring diagram on the Control Cover Inside Outdoor Unit.

CAUTION
- **The above circuit diagram is subject to change without notice.**
- **Be sure to connect wires according to the wiring diagram.**
- **Connect the wires firmly, so that not to be pulled out easily.**
- **Connect the wires according to color codes by referring the wiring diagram.**

CAUTION If a power plug is not to be used, provide a circuit breaker between power source and the unit as shown below.

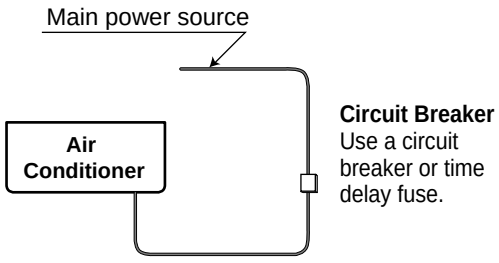

CAUTION After the confirmation of the above conditions, prepare the wiring as follows:

1) Never fail to have an individual power circuit specifically for the air conditioner. As for the method of wiring, be guided by the circuit diagram posted on the inside of control cover.

2) The screws which fasten the wiring in the casing of electrical fittings are liable to come loose from vibrations to which the unit is subjected during the course of transportation. Check them and make sure that they are all tightly fastened. (If they are loose, it could cause burn-out of the wires.)

3) Specification of power source.

4) Confirm that electrical capacity is sufficient.

5) See to that the starting voltage is maintained at more than 90 percent of the rated voltage marked on the name plate.

6) Confirm that the cable thickness is as specified in the power source specification.
(Particularly note the relation between cable length and thickness.)

7) Always install an earth leakage circuit breaker where it is wet or moist.

8) The following would be caused by voltage drop.
- Vibration of a magnetic switch, which will damage the contact point, fuse breaking, disturbance of the normal function of the overload protection device.

9) The means for disconnection from a power supply shall be incorporated in the fixed wiring and have an air gap contact separation of at least 3mm in each active(phase) conductors.

Installation of Remote Controller

HOW TO MOUNT ONTO A WALL

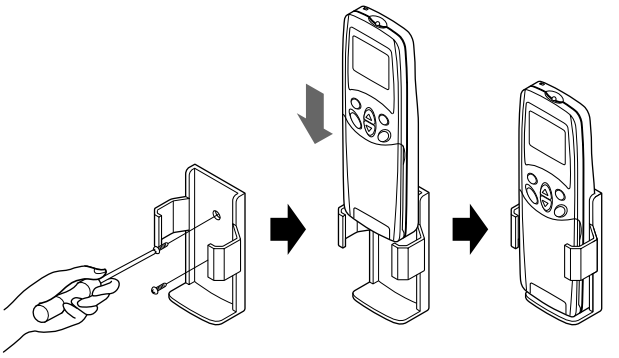

HOW TO INSERT BATTERIES

1. Remove the battery cover from the remote controller.
   • Slide the cover according to the arrow direction.

2. Insert the two batteries.
   • Be sure that the (+) and (-) directions are correct.
   • Be sure that both batteries are new.

3. Re-attach the cover.
   • Slide it back into position.



- Do not use rechargeable batteries, such batteries differ from standard dry cells in shape, dimensions, and performance.
- Romove the batteries from the remote controller if the air conditioner is not going to be used for some long time.