50Hz

SINGLE PACKAGED AIR CONDITIONERS
INSTALLATION & MAINTENANCE INSTRUCTIONS

- Please read this instruction sheet completely before installing the product.
- Installation work must be performed in accordance with national wiring standards by authorized personnel only.

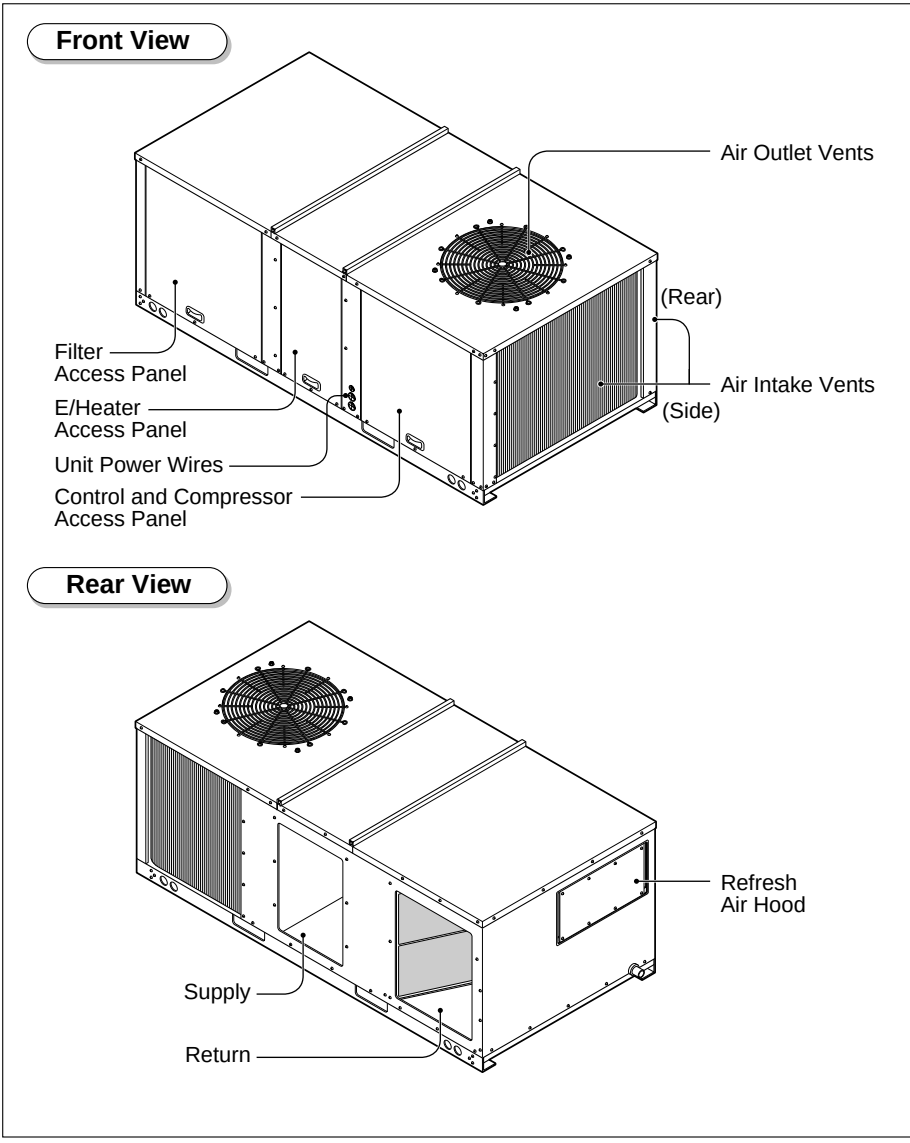

ENGLISH
ITALIANO
ESPAÑOL
FRANÇAIS
РУССКИЙ ЯЗЫК

P/No.: 3828A20229P

TABLE OF CONTENTS

1.The following should be always observed for safety 3

2. Dimensional Data 4

3. Installation of Unit 6

4. Ductwork 7

5. Condensate Drain Piping 8

6. Filter Installation 8

7. Installation of remote controller 9

8. Electrical Wiring 10

9. Control Wiring 13

10. Start-Up Pre-Start Quick Check List 15

11. Test Mode Procedure 16

12. Trial Run Mode 18

13. Evaporator Fan Adjustment 19

14. Start-up 20

15. Final installation Checklist and Maintenance 22

1. The following should be always observed for safety

ENGLISH

- Please report to or take consent by the supply authority before connecting to the system.
- Be sure to read "THE FOLLOWING SHOULD BE ALWAYS OBSERVED FOR SAFETY" before installing the air conditioner.
- Be sure to observe the cautions specified here as they include important items related to safety.
- The indications and meanings are as follows.

⚠ **WARNING**	Could lead to death, serious injury, etc.
⚠ **CAUTION**	Could lead to serious injury in particular environments when operated incorrectly.

- After reading this manual, be sure to keep it together with the owner's manual in a handy place .

⚠ WARNING

Do not install it yourself (customer).
- Incomplete installation could cause injury due to fire, electric shock or leakage of water. Consult the dealer from whom you purchased the unit or special installer.

Install the unit securely in a place which can bear the weight of the unit.
- When installed in an insufficient strong place, noisy operation and distortion could occur.

Use the specified wires to connect the unit and the field installed cut off switch box securely and attach the wires firmly to the terminal so the stress of the wires is not applied to the sections.
- Incomplete connecting and fixing could cause fire.

Check that the refrigerant gas do not leak after installation is completed.

Body injury can result from high voltage electrical components or fast moving fan drives. For protection from these inherent hazards during installation and servicing, the electrical supply must be disconnected. If operating checks are performed with the unit operating, it is the technician's responsibility to recognize these hazards and proceed safely.

Perform the installation securely referring to the installation manual.
- Incomplete installation could cause a personal injury due to fire, electric shock, noisy operation or distortion.

Perform electrical work according to the installation manual and be sure to use an exclusive circuit.
- If the capacity of the power circuit is insufficient or there is incomplete electrical work, it could result in a fire or an electric shock.

Attach the electrical part cover and service panel to the unit securely.
- If the electrical part cover panel are not attached securely, it could result in a fire or electric shock due to dust, water etc.

Be sure to use the part provided or specified parts for the installation work.
- The use of defective parts could cause an injury or leakage of water due to a fire, electric shock etc.

UNIT CONTAINS AN HCFC (R-22) REFRIGERANT
Section 608 paragraph C of the 1990 Clean Air Act states: Effective July 1, 1992 it shall be unlawful for any person, in the course of maintaining, servicing, repairing or disposing of an air conditioning system, to knowingly vent or release any CFC or HCFC refrigerant minimal releases (air purges of refrigerant hoses) associated with good faith attempts to recapture or recycle are exempted from the ban on venting.

⚠ CAUTION

The equipment does not contain surge protection. To prevent damage caused by surge, transients appropriate measures should be taken.

Having perfect vacuum process in the factory, our units don't have drier but have filter in the refrigerant circuit. In case of recharging R-22 gas in the field,
"DRIER" must be installed on the liquid line which is connected
from discharge part of condenser to intake part of evaporator. Because the refrigerant circuit is capable of containing water with imperfect vacuum.

2. Dimensional Data

Single packaged cooling unit are designed for outdoor mounting with vertical condenser discharge. They can be located either at ground level or on roof.
Each unit contains an operating charge of Refrigerant 22 as shipped.

UNIT Dimensions (Figure 1A)

Unit: inch(mm)

UNITS	5RT/6.25RT
A	41.93(1065)
B	43.70(1110)
C	50.39(1280)
D	29.49(749)
E	9.65(245)
F	2.36(60)
G	2.76(70)

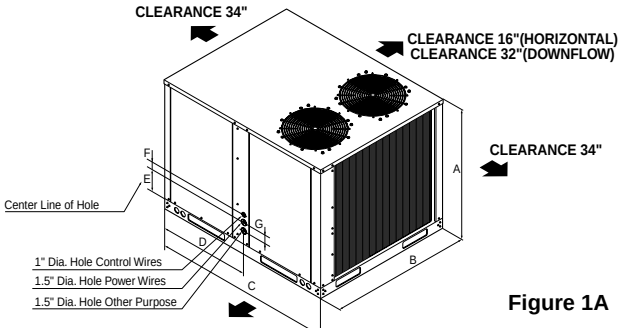

Figure 1A

UNIT Dimensions (Figure 1B)

UNITS	7.5RT
H	35.04(890)
I	46.93(1159)
J	85.43(2170)
K	10.43(265)
L	2.76(70)
M	2.36(60)
N	3.54(90)

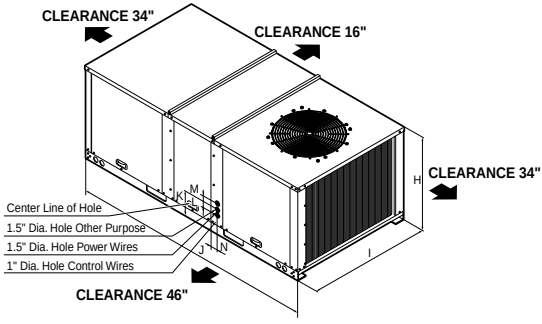

Figure 1B

UNIT Dimensions (Figure 1C)

Unit: inch(mm)

UNITS	10RT
a	41.34(1050)
b	48.89(1242)
c	85.43(2170)
d	55.0(1397)
e	6.10(155)
f	8.46(215)
g	10.43(265)

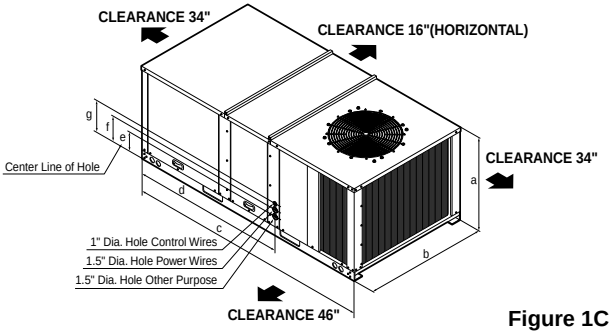

Figure 1C

Horizontal Application Unit(Figure 1D)

Rear View Showing Duct Openings For Horizontal Air Flow

Unit: inch(mm)

UNITS	15RT/17.5RT	20RT/25RT
h	47.44(1,205)	65.35(1,660)
i	69.53(1,766)	74.02(1,880)
j	95.98(2,438)	109.21(2,774)
k	63.11(1,603)	69.69(1,770)
l	6.29(160)	7.68(195)
m	8.66(220)	11.89(302)
n	11.02(280)	-

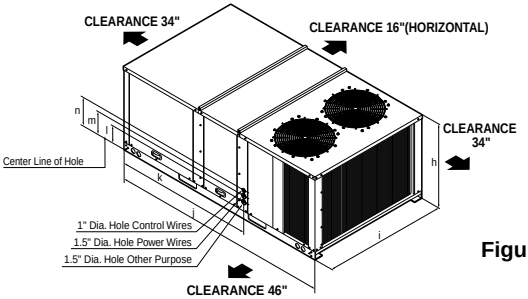

Figura 1D

Horizontal Application Unit (Figure 1E)

Rear View Showing Duct Openings For Horizontal Air Flow

Unit: inch(mm)

UNITS	5RT	6.25RT
A	13.86(352)	15.51(394)
B	9.21(234)	8.43(214)
C	10.47(266)	10.94(278)
D	3.86(98)	2.87(73)
E	4.33(110)	4.33(110)
F	22.28(566)	24.25(616)
G	16.38(416)	13.15(334)

Rear View

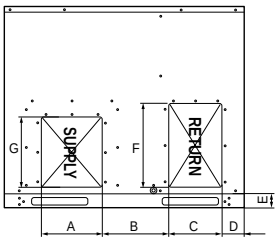

Figure 1E

Horizontal Unit (Figure 1F)

Rear View Showing Duct Openings For Horizontal Air Flow

Rear View

Unit: inch(mm)

UNITS	7.5RT	8.5RT 10RT	15RT 17.5RT	20RT 25RT
a	15.47(393)	16.06(408)	24.53(623)	25.57(649.5)
b	16.18(411)	14.02(356)	9.17(233)	15.28(388)
c	18.82(478)	20.16(512)	24.53(623)	27.34(694.5)
d	2.40(61)	2.44(62)	2.36(60)	2.40(61)
e	5.35(136)	2.01(51)	5.08(129)	6.10(155)
f	26.89(683)	34.33(872)	40.24(1,022)	57.09(1,450)

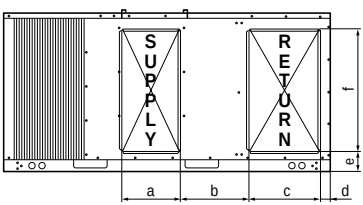

Figure 1F

Down Flow Application Unit (Figure 1G)

(5RT only)

5RT units are Convertible Unit

Top View

Unit: inch(mm)

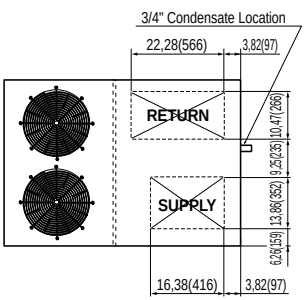

Figure 1G

3. Installation of Unit

3-1. Inspection

1) Check for damage after unit is unloaded. Report promptly, to the carrier, any damage found in the unit. Do not drop unit.
2) Check the unit nameplate to determine if the unit voltage is correct for the application. Determine if adequate electrical power is available. Refer to the application specifications.
3) Check to be sure the refrigerant charge has been retained during shipment. Access to 1/4" flare pressure taps may be gained by removing compressor compartment access panel.

3-2. Location and Recommendations

1) Unit Support

If unit is to be roof mounted check building codes for weight distribution requirements.

2) Location and Clearances

Installation of unit should conform to local building codes and the National Electrical Code.

Select a location that will permit unobstructed airflow into the condenser coil and away from the fan discharge and permit unobstructed service access into the compressor compartment. Suggested airflow clearances and service clearances are given in Figure 1.

3) Placing and Rigging

Rig the unit using either belt or cable slings. The sling eyelet must be placed through the lifting holes in the base rail of the unit. The point where the slings meet the lifting eyelet should be at least 6 feet above the unit. Use spreader bars to prevent excessive pressure on the top of the unit during lifting.

Important: The use of "spreader bars" is required when hoisting the unit (prevents damage to sides and top). Top crating can be used as spreader bars.

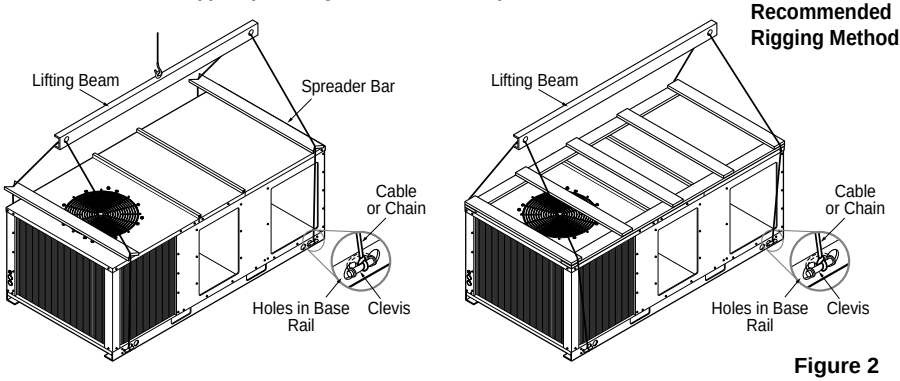

Figure 2

4) Roof Mounted Units

Downflow units(only 5RT) should be mounted on a roof curb when possible. On new roofs, the curb should be welded directly to the roof deck. For existing construction, nailers must be installed under the curb if welding is not possible. Be sure to attach the downflow ductwork to the curb before setting unit in place.

When installing the unit, it must be leveled to insure proper condensate flow from the unit drain pan.

5) Slab Mount

"For ground level installation, the unit base should be adequately supported and hold the unit near level. The installation must meet the guidelines set forth in local codes."

4. Ductwork

ENGLISH

1. Attaching Downflow Ductwork to The Roof Curb (below 5.0RT)

Supply and return air flanges are provided on the roof curb for easy duct installation. All duct work must be run and attached to the curb before the unit is set into place.

2. Ductwork construction guidelines

Connections to the unit should be made with three-inch canvas connectors to minimize noise and vibration transmission.

Elbows with turning vanes or splitters are recommended to minimize air noise and resistance.

The first elbow in the ductwork leaving the unit should be no closer than three times blower diameter to avoid turbulence and back pressure.

3. Attaching Horizontal Ductwork to the Unit

All conditioned air ductwork should be insulated to minimize heating and cooling duct losses. Use minimum of 2" of insulation with a vapor barrier. The outside ductwork must be weather proofed between the unit and the building.

When attaching ductwork to a horizontal unit, provide a flexible water tight connection to prevent noise transmission from the unit to the ducts. The flexible connection **must** be indoors and molded out of heavy canvas.

Note: Do not draw the canvas taut between the solid ducts.

IMPORTANT(below 5.0RT)

To convert to downflow, remove covers from the downflow supply and return air opening(painted side out) and secure with sheet metal screw (see Figure 3)

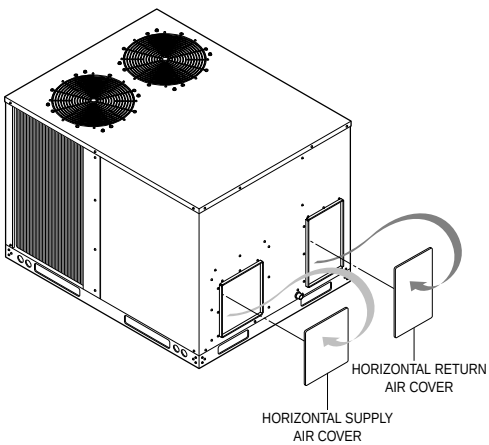

Figure 3

Note:

SUTTLY OPENING

1. Remove the screw nearest to the opening and pull the panel firmly toward the outside of the unit to disengage the back attachment.

RETURN OPENING

2. Remove right hand screw and move panel to the right or remove both screws.

5. Condensate Drain Piping

A. CONDENSATE DRAIN

A 3/4 inch male condensate drain connection is located on the corner of the unit next to the evaporator section access panel. A trap should be installed and filled with water before starting the unit to avoid air from being drawn through. Follow local codes and standard piping practices when running the drain line. Pitch the line downward, away from the unit, and avoid long horizontal runs. See Figure 4.

Do not use reducing fittings in the drain lines.
The condensate drain must be:

1. Made of 3/4" pipe size.
2. Pitched 1/4" per foot to provide free drainage to convenient drain system.
3. Trapped
4. Must not be connected to closed drain system.

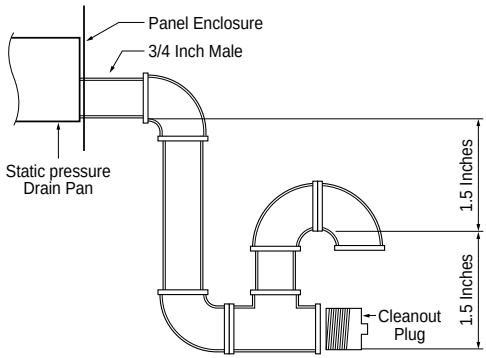

Figure 4

B. OUTDOOR COIL CONDENSATE DRAINAGE PRECAUTION

Condensate drains from the outdoor coil during the heating and defrost cycles. Normally this condensate may be allowed to drain directly onto the ground/roof. A gravel bed is recommended to prevent mud splashing.

WARNING : *The unit should not be installed in an area where mud or ice could cause personal injury. Remember that condensate drips from the outdoor coil during heat and defrost cycles and that this condensate freezes when the temperature of the outdoor air is below 0°C(32°F)*

6. Filter Installation

■ **Above 7.5RT**

This Unit Filters are anti-bacteria and washable type.

Access to the filters is made by removing the evaporator fan access panel. Each unit ships with free filters, as determined by unit size.

On the filter access panel at the left side of the unit, "FILTER ACCESS PANEL" label is attached.

■ **Below 6.25RT**

This unit is shipped without a filter and is the responsibility of the installer to secure a filter in the return air ductwork.

Important: Do not operate unit without filters in place.

7. Installation of remote controller

ENGLISH

- Install the remote control box and cord correctly.

POINT OF REMOTE CONTROLLER INSTALLATION

- As the room temperature sensor is in the remote controller, the remote control box should be installed in such places away from direct sunlight and high humidity and direct supply cold air.

INSTALLATION OF THE REMOTE CONTROL BOX

- Select places that is not splashed by water.
- Select control position after receiving customer approval.
- The room temperature sensor of the thermostat for temperature control is built in remote controller.
- This remote controller is equipped with liquid crystal display. If this position is higher or lower, display is difficult to see.
  (The standard height is 1.2~1.5m high)

ROUTING OF THE REMOTE CONTROL CORD

- Keep the remote control cord away from the refrigerant piping and the drain piping.
- To protect the remote control cord from electrical noise, place the cord at least 5cm away from other power cables. (Audio equipment, Television set, etc)
- If the remote control cord is secured to a wall, provide a trap at the top of the cord to prevent water droplets from running.

ELECTRICAL WIRING TO THE INDOOR UNIT

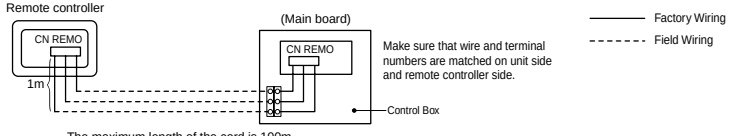

The maximum length of the cord is 100m.
If the length of the cord exceeds 50m, use a wire size greater than 0.5mm^2.

DISASSEMBLING OF THE REMOTE CONTROLLER

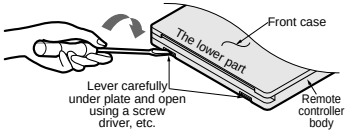

WHEN THE REMOTE CONTROLLER IS INSTALLED WITH THE CORD BURIED.

PROCEDURE OF INSTALLATION

1. Fix the under plate on the switch box by screws(Local supply). In this case, fit the under plate on the wall, and be careful of deformation.
2. Receive the remote control cord in the switch box.
3. Hook the remote control unit on the under plate.

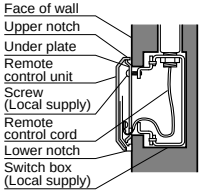

WHEN THE REMOTE CONTROLLER IS INSTALLED WITH THE CORD EXPOSED.

PROCEDURE OF INSTALLATION

1. Fix the under plate on the wall by self tapping screws (accessory).
2. Make a slit (Part A) at the top side of the remote control body by nipper.
3. Route the cord as shown in the following figure. In this case, push the cord into the grooved around the case(Part B).
4. Hook the remote control unit on the under plate.

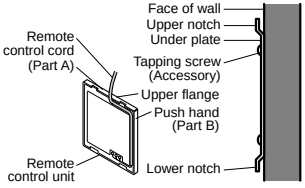

FIXING OF REMOTE CONTROL CORD

1. Fix the cord clamps on the wall by ø3 tapping screws(Local supply).
2. Fix the remote control cord.

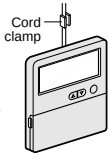

8. Electrical Wiring

Check the unit nameplate for the required supply voltage. Determine if adequate electrical power is available. Refer to application specifications.

Electrical wiring and grounding must be installed in accordance with local codes and with the National Electric code Latest Revision.

Electrical Power

It is important that proper electrical power is available for the unit. Voltage variation should remain within the limits stamped on the nameplate.

Disconnect Switch

Provide an approved weatherproof disconnect either on the side of unit or within close proximity.

Over Current Protection

The branch circuit feeding the unit must be protected as shown on the unit rating plate.

Power Wiring

The power supply lines must be run in approved conduit to the disconnect, and in the bottom of the unit control box. Provide strain relief for all conduit with suitable connectors. Provide flexible conduit supports whenever vibration transmission may cause a noise problem within the building structure.

Power Entry Guide

Important: Holes are provided for low-voltage and high-voltage wiring. It is not necessary to punch any new holes in either the interior or exterior unit panels. If new holes are punched, performance will be adversely affected unless they are resealed to be both air- and watertight.

LOW VOLTAGE FIELD WIRING DIAGRAM

■ Cooling only - 1 Comp, 1 Heater(Figure 5A)
Thermostat(Cooling only model)

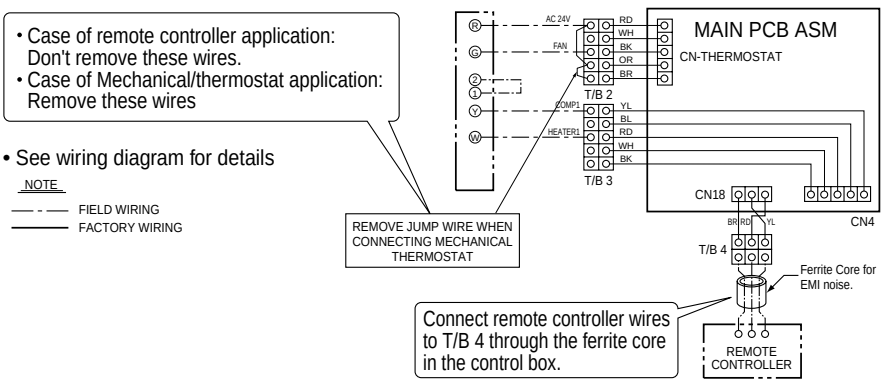

Figure 5A

■ Cooling only - 1 Comp, 2 Heater(Figure 5B)
Thermostat(Cooling only model)

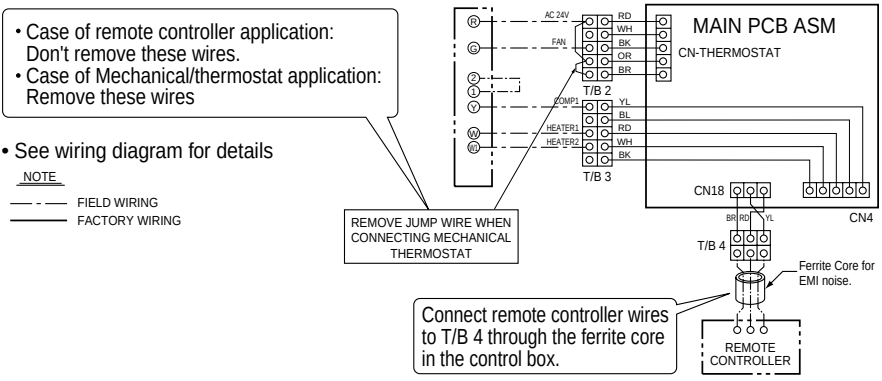

Figure 5B

■ Cooling only - 2 Comp, 2 Heater(Figure 5C)
3 Comp, 2 Heater
Thermostat(Cooling only model)

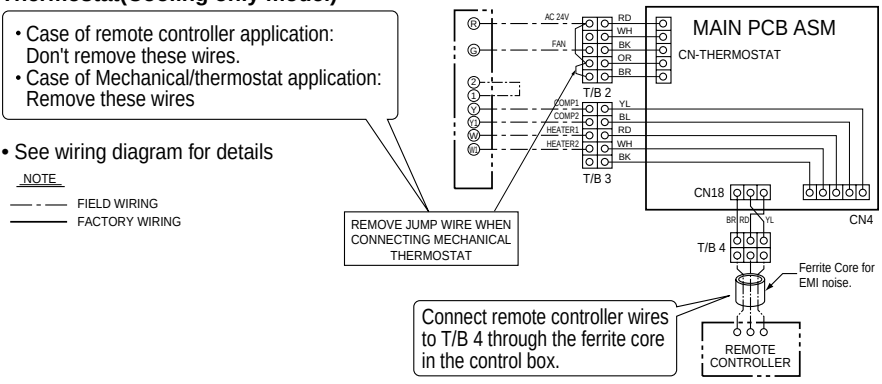

Figure 5C

■ Heat pump - 1 Comp, 1 Heater(Figure 5D)
Thermostat(Heat pump model)

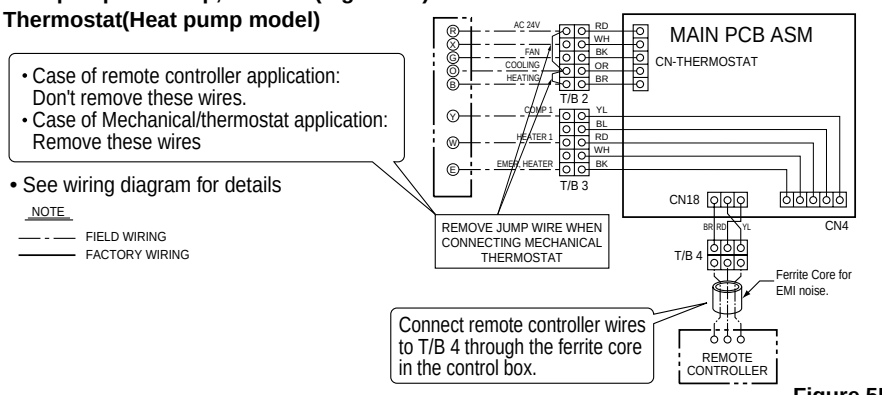

Figure 5D

■ **Heat pump - 1 Comp, 2 Heater(Figure 5E)**
Thermostat(Heat pump model)

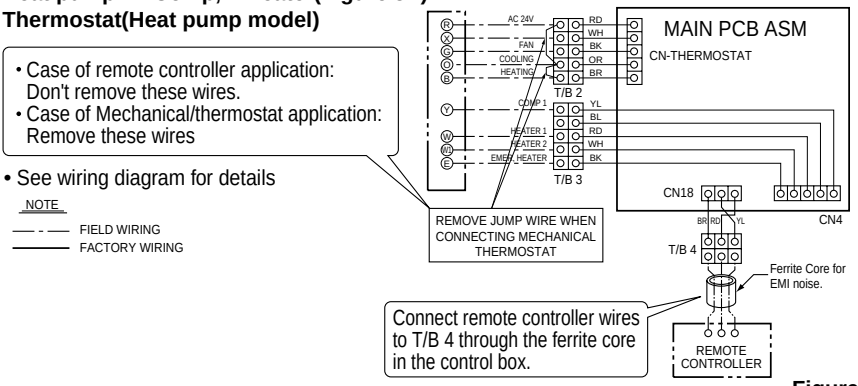

Figure 5E

■ **Heat pump - 2 Comp, 2 Heater(Figure 5F)**
Thermostat(Heat pump model)

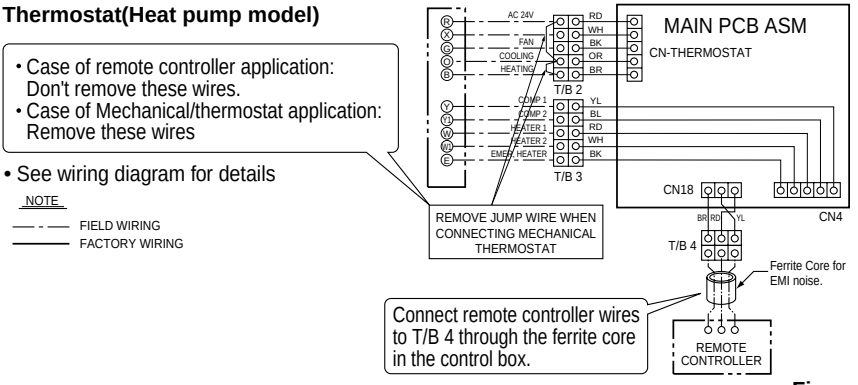

Figure 5F

HIGH VOLTAGE FIELD WIRING DIAGRAM

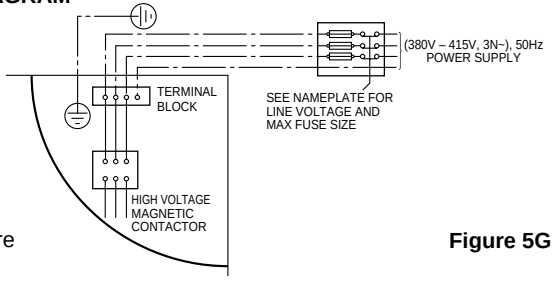

Provide flexible conduit supports whenever vibration transmission may cause a noise problem within the building structure.
See Figure 5G for high voltage wiring connections. Insure all connections are made tight.

Figure 5G

Note: For branch circuit wiring (main power supply to unit disconnect), Wire size for the length of run should be determined using the circuit ampacity found on the unit nameplate and the N.E.C..

For more than 3 conductors in a raceway or cable, see the N.E.C. for de-rating the ampacity of each conductor.

GROUNDING: THE UNIT MUST BE ELECTRICALLY GROUNDED IN ACCORDANCE WITH LOCAL CODES AND THE NATIONAL ELECTRICAL CODE.

9. Control Wiring

ENGLISH

Remote controller conductors are standard thermostat wire 22 to 14 ga.

Recommended wire sizes and lengths for installing the remote controller are provided in the table on page 12. Resistance of 2 1/2 ohms per conductor can cause deviation in the accuracy of the control.

Field Installed DC Control Wiring

Before installing the connecting wiring between the components utilizing a DC analog output/input signal and the unit, refer to the following table for conductor sizing guidelines and;

1) Use standard copper conductor thermostat wire unless otherwise specified.
2) Ensure that the wiring between the controls and the unit's termination point does not exceed two and a half (2 1/2) ohms/conductor for the length of the run.
3) Refer to Figure 5 for the electrical access locations provided on the unit.
4) Do not run the electrical wires transporting Sensor DC signals in or around AC wires.

Note: Resistance in excess of 2.5 ohms per conductor can cause deviations in the accuracy of the controls

Emergency Shut Down

For Emergency Shut Down, remove the jumper between 1 and 2 and install normally closed contacts (Open at Fault Condition). Immediate shut down will occur and the MAIN CONTROLLER will be disabled.

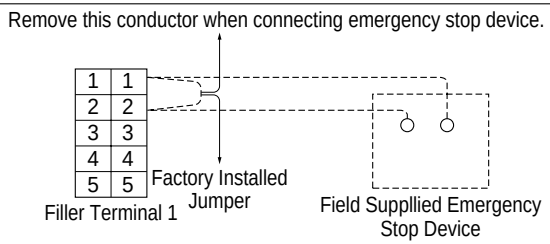

Note: To stop unit operation in case of fire, remove the jumper between terminals 1 and 2. Refer to the unit wiring diagram.

Figure 6

Important: After completion of wiring, check all electrical connections, including factory wiring within the unit, and ensure all connections are tight. Replace and secure all electrical box covers and access doors before leaving unit or connecting power to circuit supplying unit.

(Note)

- Keep all wires away from the refrigerant pipe.
- To protect the control cord from electrical noise, place DC wires at least 0.2 inch away from AC wires.
- Following diagram is the example of wiring arrangement <LK-0880HH>

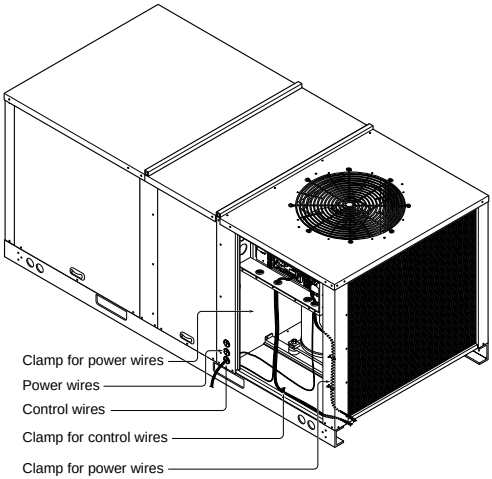

Figure 7

Note

The anticipator in the thermostat shall be removed, if a unit which has micro control function is controlled by thermostat with anticipator.

Thermostat (cooling only model)

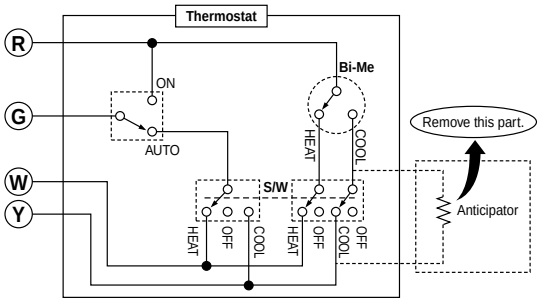

Thermostat (Heat pump model)

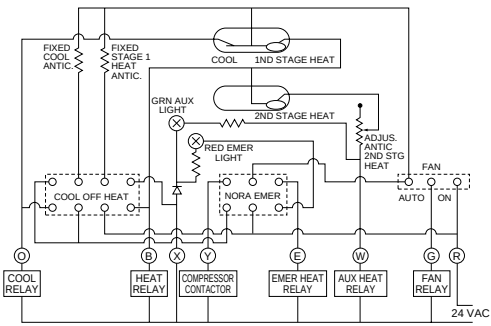

10. Start-Up Pre-Start Quick Check List

ENGLISH

• Is unit leveled and located with proper clearances?	➔ See Figure 1.
• Is the duct work correctly sized, run, taped, insulated and weather proofed with proper unit arrangement?	➔ See duct work installation
• Is condensate line properly sized, run trapped and pitched?	
• Is the filter of the correct size, clean and in place?	
• Is the wiring properly sized and run in according to the unit wiring diagram?	
• Are all wiring connections tight including those in unit and compressor electrical boxes?	
• Has the unit been properly grounded and fused with the recommended fuse size?	
• Is the remote controller correctly wired and in a good location?	
• Have the air conditioning systems been checked at the service ports for charge and leak tested if necessary?	
• Does the condenser fan and indoor fan turn freely without rubbing and are they tight on the shafts?	
• Visually inspect the unit to ensure that the airflow required for the condenser coil is not obstructed from the unit.	
• Inspect the control panel wiring to verify that all electrical connections are tight, and that wire insulation is intact.	
• Is the indoor fan and rotation correct?	
• Has the indoor fan speed been determined and the proper speed been set?	➔ See air flow performance data
• Has all work been done in accordance with applicable local and national codes?	
• Are all covers and access panels in place to prevent air loss and safety hazards?	

⚠ WARNING

Bodily injury can result from high voltage electrical components. If operating checks must be performed with the unit operating, it is the technician's responsibility to recognize these hazards and proceed safely. Failure to do so could result in severe personal injury or death due to electrical shock or contact with moving parts.

Power-up Initialization

The "initialization" by the MAIN CONTROLLER occurs each time the system is powered-up. the MAIN CONTROLLER performs internal self-diagnostics checks, which include identifying the equipment components of its system, and the configuring of itself to that system. It also checks itself to be sure if it is functioning correctly.

11. Test Mode Procedure

Operating the unit from the roof using the test mode.

⚠ WARNING

When operating the unit in the test mode, the evaporator access panel and the control box cover, must be closed. Failure to ensure that the evaporator access panel and control box cover is in place could result in severe personal injury or death.

Step test Mode

The step test mode is initiated by pressing test key(tact switch located on MAIN CONTROLLER).
When the test mode is initiated, the system will begin the first test step, and turn on the indoor fan. (See test mode table.)

To continue to the next step, repress the test key.
As you repeat to press the Test key, the unit will move through the steps according to the tabel.

The Test Mode is performed only when the unit is in "STOP" state.
Any operating signal from remote controller or thermostat can interrupt "Test Mode" and operate the unit to the signal.

To quit Test Mode, cycle the unit power at the unit disconnect, or repeat to press the Test key until the unit stop.

Test Key Location

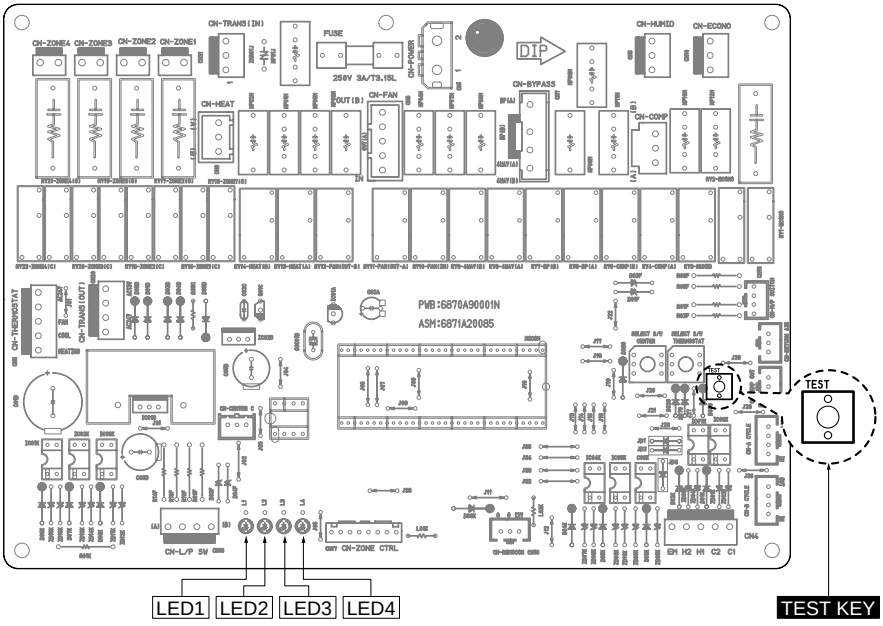

Test Mode Table

Test key is available when the power is off

O : ON
X : OFF

STEP	INDOOR FAN	*OUTDOOR FAN 1	*OUTDOOR FAN 2	COMP 1	* COMP 2	* HEATER 1	* HEATER 2	* HUMIDIFIER	*4WAY VALVE 1	*4WAY VALVE 2	* B/pass	* B/pass
1	O	X	X	X	X	X	X	X	X	X	X	X
2	O	O	X	X	X	X	X	X	X	X	X	X
3	O	O	O	X	X	X	X	X	X	X	X	X
4	O	O	O	O	X	X	X	X	X	X	X	X
5	O	O	O	O	O	X	X	X	X	X	X	X
6	O	X	X	X	X	O	X	X	X	X	X	X
7	O	X	X	X	X	O	O	X	X	X	X	X
8	O	X	X	X	X	O	O	O	X	X	X	X
9	O	X	X	X	X	X	X	X	O	X	X	X
10	O	X	X	X	X	X	X	X	O	O	X	X
11	X	X	X	X	X	X	X	X	X	X	O	O
12	X	X	X	X	X	X	X	X	X	X	X	X
13	O	X	X	X	X	X	X	X	O	O	X	X
14	X	X	X	X	X	X	X	X	X	X	X	X

(Note)

1. " * " mark means that the function depends on unit model. In case the unit doesn't have that function or options, you can move on to next test step by pressing TEST KEY again.
2. Test mode is finished after pressing TEST KEY 14 times and then you can control with remote controller.
3. One more pressing of TEST KEY after pressing 14 times return test mode to step 1. (NOTICE)

ENGLISH

12. Trial Run Mode

Operating the unit in the room without concerning about set temperature.

Pressing simultaneously 'Room Temperature Checking Button' and 'Hour Button' for 3 seconds regardless of room temperature setting, the unit operates in cooling mode for 18 minutes and stops.

To cancel Trial Run Mode, press one of Set Temperature, Timer set, Fan operation button.

Each time pressing ‘Operation Mode Selection Button’, dehumidification, Heating, Cooling mode operates sequently.

E-Heater doesn’t work during ‘Trial Run Mode’ but humidifier function is selectable.

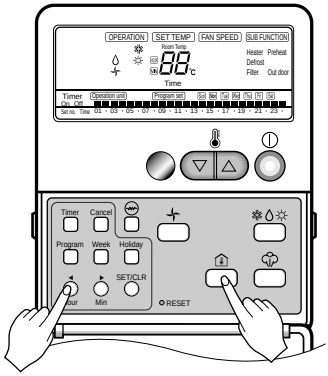

13. Group Control

It operates maximum 16 Units by only one Wired Remote Controller, and each Unit starts sequentially to prevent overcurrent.

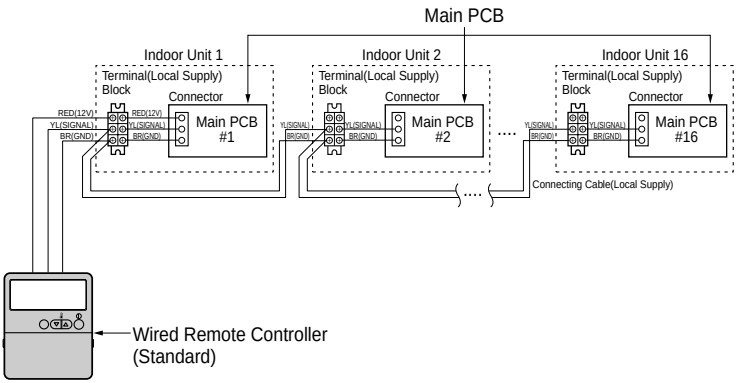

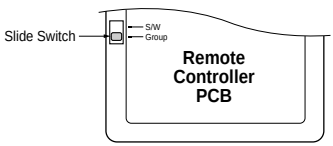

- Using the supplied Wired Remote Controller, wire them like above.
- Move slide switch to "Group" position.
- Ensure that the color of wire.

14. Evaporator Fan Adjustment

Use the following procedure to determine the proper adjustment of the evaporator fan for a specific application.

1. Determine total system external static pressure (in inches water column) with accessories installed. to accomplish this:
   1) Obtain the design airflow rate and the design external static pressure drop through the distribution system. Your sales representative or the design engineer can provide you with these values.
   2) Using the table from unit Service Manual, add static pressure drop of the accessories installed on the unit.
   3) Add the total accessory static pressure drop (from step 1b) to the design external static pressure. The sum of these two values is the total system external static pressure.
2. Use the table(s) in the Service Manual to find the external static pressure (in inches water column) that most closely approximates total system external static pressure. Then locate the appropriate airflow rate (on cfm) for your unit. The value obtained represents the break horsepower for the evaporator fan motor and the fan RPM.

Important: Fan Break Horsepower (BHP) listed in the Table is the percentage range of nameplate amperage the motors will safely work within, before an oversized motor is required.

In case of 6.25RT and below, the indoor fan motor is set to operate at high speed. It can be rewired to operate in Low or super Hi speed cooling and heating. See wiring diagram in the unit how to rewire.

On the above 7.5RT models, the indoor fan speed is changed by opening or closing the adjustable motor sheave. See Figure 8.

To Increase CFM

Loosen the pulley adjustment set screw and turn sheave clockwise.

To Decrease CFM

Loosen the pulley adjustment set screw and turn sheave counterclockwise.

Note: The actual external static pressure may vary from design ESP due to actual duct work installation. The required air flow should be respected to provide the design cooling capacity.

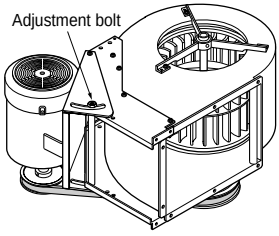

Figure 8A

To Increase Belt Tension

- **7.5RT ~ 25RT**
  1) Loosen adjustment bolt.
  2) Pull motor mounting plate back until belt is tight.
  3) Tighten adjustment bolt after belt has correct tension.

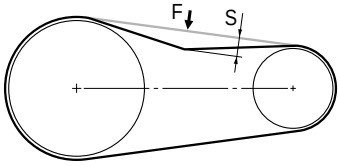

FORCE(F)	HEIGHT(S)	REMARK
9~11 lbf	0.8 ~ 1.2(inch)	-

15. Start-up

Crankcase heaters are energized as long as there is power to the unit. Energize heaters 24 hours prior to unit start-up.

Cooling Mode

Verify that the unit airflow rate is adjusted according to information provided in "Determining Evaporator Fan Adjustment" section of this manual.

To start the unit in the cooling mode, close unit disconnect switch and set the operating mode to COOL and move the cooling setpoint approximately 5˚C below room temperature. The condenser fan motor, compressor and evaporator fan motor should operate automatically. There will be a delay of up to 3 minutes before the unit will start in the cooling mode.

Heating Mode

(Heat pump model only)

Verify that the unit airflow rate is adjusted according to information provided in "Determining Evaporator Fan Adjustment" section of this manual.

To start the unit in the Heating mode, close unit disconnect switch and set the operating mode to HEAT and move the Heating setpoint approximately 5˚C above room temperature. The condenser fan motor, compressor and evaporator fan motor should operate automatically. There will be a delay of up to 3 minutes before the unit will start in the Heating mode.

Electric Heater Mode (optional)

(Cooling model only)

Check to ensure that all grilles and registers are open and all unit access doors are closed before start-up.

Turn on unit main power supply.

Press the E/Heater operation button on the Remote controller.

Set the temperature approximately 5˚C above room temperature.

Heating & Electric Heater (optional)

(Heat pump model only)

To start the unit in the heating operation mode, and Electric Heater operation Mode, close unit disconnect switch and set the operating mode to Heat and move the Heating setpoint approximately 5°C above room temperature.

The condenser fan motor, compressor and evaporator fan motor Electric Heater should operate automatically.

There will be delay of up to 3 minutes before the unit will start in the Heating mode.

Operating Pressures

After the unit has operated in the cooling mode for a short period of time, install pressure gauges on the gauge ports of the discharge and suction line valves.

Note: Always route refrigerant hoses through the port hole provided and have compressor access panel in place.

Check the suction and discharge pressures and compare them to the normal operating pressures provided in the unit's Service Manual.

Note: Do not use pressures from Service manual to determine the unit refrigerant charge. The correct charge is shown on the unit nameplate. To charge the system accurately, use superheat charging or weigh the charge.

Voltage

With the compressor operating, check the line voltage at the unit. The voltage should be within the range shown on the unit nameplate. If low voltage is encountered, check the size and length of the supply line from the main disconnect to the unit. The line may be undersized for the length of the run.

⚠ WARNING

Bodily injury can result from high voltage electrical components. If operating checks must be performed with the unit operating, it is the technician's responsibility to recognize these hazards and proceed safely. Failure to do so could result in severe personal injury or death due to electrical shock or contact with moving parts.

16. Final Installation Checklist and Maintenance

- Does unit run and operate as described in the "Sequence of Operation" in the unit Service Manual?
- Is the condenser fan and indoor blower operating correctly, with proper rotation and without undue noise?
- Are the compressors operating correctly and has the system been checked with a charging chart?
- Have voltage and running currents been checked to determine if it is within limits?
- Have the air discharge grilles been adjusted to balance the system?
- Has the ductwork been checked for air leaks and condensation?
- Has the indoor airflow been checked and adjusted if necessary?
- Has the unit been checked for tubing and sheet metal rattles and are there unusual noises to be checked?
- Are all covers and panels in place and properly fastened?
- Has the owner or maintenance personnel been given this manual, warranty, and been instructed on proper operation and maintenance?

Routine Maintenance By Owner

You can do some of the periodic maintenance functions for your unit yourself; this includes cleaning air filters, cleaning unit cabinet, cleaning the condenser coil, and conducting a general unit inspection on a regular basis.

⚠ WARNING

Before removing access panels to service unit, disconnect power supply. Failure to disconnect power before attempting any servicing can result in severe injury or death.

Air Filters

■ Above 7.5RT

It is very important to keep the central duct system air filters clean. Be sure to inspect them at least once each month when the system is in constant operation. (In new buildings, check the filters every week for the first 4 weeks.)

These units have anti-fungus filter.

Permanent type filters can be cleaned by washing with a mild detergent and water. Ensure that the filters are thoroughly dry before reinstalling them in the unit (or duct system).

■ Below 6.25RT

This unit is shipped without a filter and is the responsibility of the installer to secure a filter in the return air ductwork.

Filter must always be used and must be kept clean. When filter become dirt laden, insufficient air will be delivered by the blower, decreasing your unit efficiency and increasing operating costs and wear - and - tear on the unit and controls. Filter should checked monthly especially since the unit may be used for both heating and cooling.

Condenser coil

Unfiltered air circulates through the unit's condenser coil and can cause the coil's surface to become clogged with dust, dirt, etc.. To clean the coil, vertically (i.e., along the fins) stroke the coil surface with a soft bristled brush.

Keep all vegetation away from the condenser coil area.

Maintenance Performed by Serviceman-Cooling Season

To keep your unit operating safely and efficiently, the manufacturer recommends that a qualified serviceman check the entire system at least once each year, or more frequently if conditions warrant. Your serviceman may examine these areas of your unit:

1. Filters	→ For cleaning
2. Motors and drive system components	
3. Condenser coils	→ For cleaning
4. Safety Controls	→ For mechanical cleaning
5. Electrical components and wiring	→ For possible replacement or connection tightness
6. Condensate drain	→ For cleaning
7. Inspect the unit duct connections to ensure they are physically sound and sealed to the unit casing.	
8. Inspect the unit mounting support to see that it is sound.	
9. Inspect the unit to ensure there is no obvious deterioration.	

Maintenance Performed By Serviceman-Heating Season

Complete the unit inspections and service routines described below at the beginning of each heating season.

⚠ WARNING

To prevent injury or death due to electrical shock of contact with moving parts, lock unit disconnect switch in open position before servicing unit.
To prevent an explosion and possible injury, death and equipment damage, do not store combustible materials, gasoline or other flammable vapors and liquids near the unit.

Inspect the control panel wiring to verify that all electrical connections are tight and wire insulation is intact.

Memo