Website: http://www.lg.ca

MICROWAVE OVEN

INSTALLATION INSTRUCTIONS

PLEASE READ AND SAVE THESE INSTALLATION INSTRUCTIONS.

LMV1651SW
LMV1651SB
LMV1651SS

P/NO.: 3828W5U0475
Printed in China

Your Safety First

BEFORE YOU START

- **Proper installation is the installer's responsibility!**
  – Read the entire manual before you begin. The model number label is located on the oven front. See Figure 1. The mounting plate is located on back side of microwave oven. See Figure 2.

BE SURE TO READ THE FOLLOWING SAFETY INSTRUCTIONS:

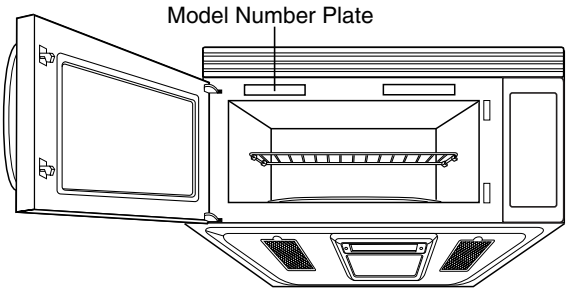

Figure 1

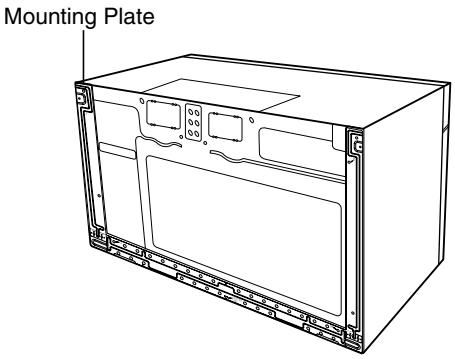

Figure 2

⚠ W A R N I N G ⚠

For Your Safety

- **You will need TWO people to install this oven. It is heavy and could cause personal injury if not handled properly.**

- **Avoid Electrical Shock!**
  – Before you drill into the wall, note where electrical outlets are and where electrical wires might be concealed behind the wall. **YOU COULD GET AN ELECTRIC SHOCK** if you contact electrical wires with your drill bit.
  – Locate and disconnect the power to any electrical circuits that could be affected by installing this oven. **IF YOU DO NOT DISCONNECT THE POWER, YOU COULD GET AN ELECTRIC SHOCK.**

- **ELECTRICAL RATING OF THIS OVEN : 120V AC 60Hz.**
  – You need a DEDICATED 120V, 60Hz, AC only, 15 or 20A, fused electrical supply (located in the cabinet above the microwave as close as possible to the microwave) serving only the microwave.

Your Safety First

• THIS APPLIANCE MUST BE GROUNDED!

– If there is an electrical short circuit, grounding reduces the risk of electrical shock by providing an escape wire for the electric current. This appliance is equipped with a cord having a grounding wire with a grounding plug.

- Place the plug into a properly installed and grounded outlet. See Figure 3.
- Do not use an extension cord.
- Keep the power cord dry and do not pinch or crush it.

• DO NOT, UNDER ANY CIRCUMSTANCES, REMOVE THE POWER SUPPLY CORD GROUNDING PRONG!

This appliance MUST be grounded!

PROPERLY POLARIZED AND GROUNDED OUTLET

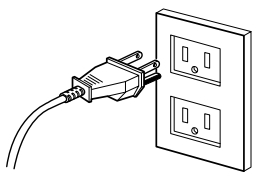

Three-Pronged (Grounding) Plug
Figure 3

⚠ W A R N I N G ⚠

If you use the grounding plug improperly, you risk electric shock and/or fire!

Check with a qualified electrician if you are not sure whether the oven is properly grounded or if you do not completely understand the grounding instructions.

DO NOT USE A FUSE IN THE NEUTRAL OR GROUNDING CIRCUIT.

⚠ W A R N I N G ⚠

Improper grounding could result in electric shock, fire or other personal injury.

SAVE THESE INSTRUCTIONS FOR THE LOCAL ELECTRICAL INSPECTOR'S USE.

• DO NOT EXPOSE YOURSELF TO EXCESSIVE MICROWAVE ENERGY!

– DO NOT try to operate the microwave oven with the door open.
– DO NOT tamper with or defeat the safety interlocks.
– DO NOT place objects between the microwave oven front face and the door.
– DO NOT allow soil or cleaner residue to build up on the flat surfaces around the microwave oven door.
– DO NOT operate the microwave oven if it is damaged.
– The microwave oven door must close properly to operate safely.
– DO NOT USE THE MICROWAVE OVEN:
  - If the door is bent.
  - If the hinges or latches are broken or loose.
  - If the door seals, sealing surfaces or glass is broken.
– DO NOT ATTEMPT TO ADJUST OR REPAIR THE OVEN YOURSELF!
  It should be adjusted and repaired by a qualified technician who can check for microwave leakage after repairing the oven.

⚠ W A R N I N G ⚠

If you do not use the microwave oven as instructed,
you could be exposed to excessive microwave energy.

Your Safety First

- **MAKE SURE YOU HAVE ENOUGH SPACE AND SUPPORT.**
  - Mount the oven against a flat, vertical wall, so that it is supported by the wall. The wall should be constructed of minimum 2" x 4" wood studding and 3/8" thick drywall or plaster/lath.
  - ATTACH AT LEAST ONE of the two lag screws supporting the oven to a vertical, 2" x 4" wall stud.
  - DO NOT mount the microwave oven to an island or peninsula cabinet.
  - BE SURE the upper cabinet and rear wall structures can support 150 lbs., plus the weight of any items you place inside the oven or upper cabinet.
  - Locate the oven away from strong draft areas, such as windows, doors, and strong heating vents.
  - BE SURE you have enough space. See Figure 4 below for minimum vertical and horizontal clearance.

⚠ W A R N I N G ⚠

If you do not mount the oven as instructed,
you risk personal injury and/or property damage.

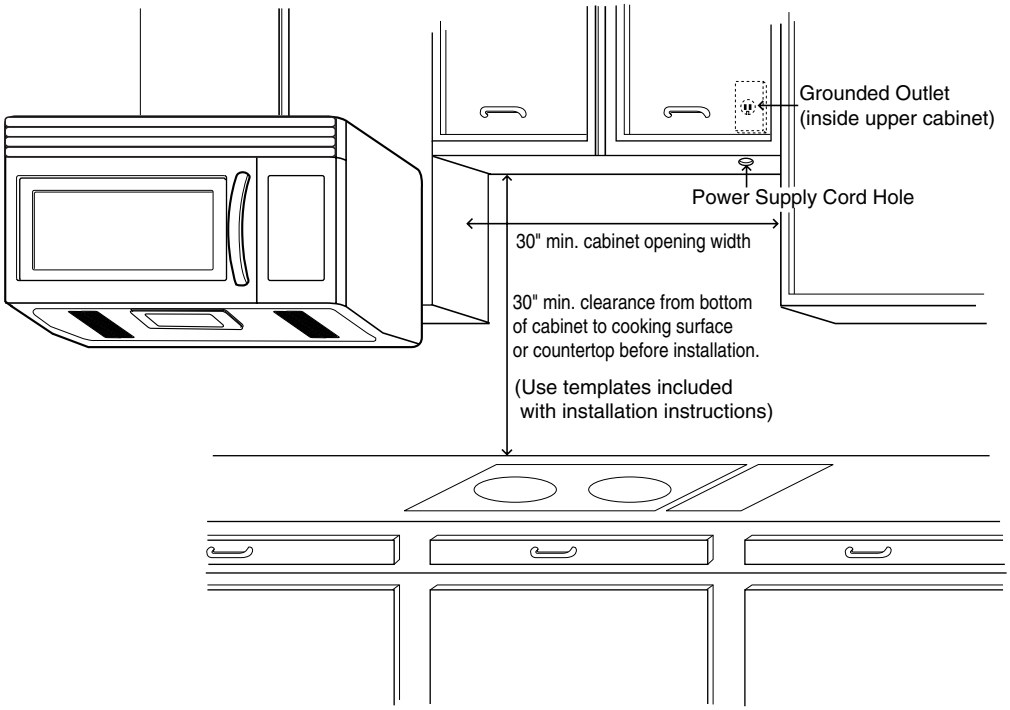

Figure 4

CAUTION

- Before you begin installing the oven, PLACE A PIECE OF THE CARTON OR OTHER HEAVY MATERIAL (a blanket) over the countertop or cooktop to protect it. Do not use a plastic cover. Failure to protect these surfaces could result in property damage.

Parts, Tools, Materials

THE FOLLOWING PARTS ARE SUPPLIED WITH THE OVEN:

NOTE: Depending on your ventilation requirements, you may not use all of these parts.

Damper/duct connector
(for roof venting or wall venting installation)
Not Actual Size (2 pieces must be assembled as shown)

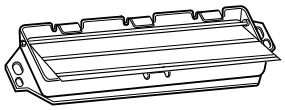

One power cord clamp and
One dark-colored mounting screw
(to hold the power cord)
Actual Size

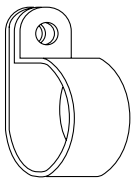

One power cord clamp bushing - Actual Size (for the cord hole in a metal upper cabinet)

Four 1/4" x 2" lag screws - Actual Size
(for wall stud holes)

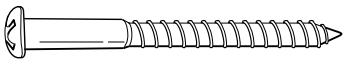

Four 1/4" x 3" toggle bolts - Actual Size
(for drywall holes)

Two 1/4" x 3" bolts - Actual Size
(for securing to the upper cabinet)

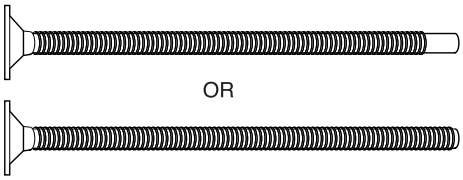

OR

Two tapping screws - Actual Size
(for attaching the damper duct connector)

One upper cabinet template- Not Actual Size

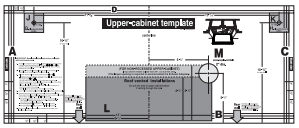

Four spring toggle heads - Actual Size
(for the toggle bolts)

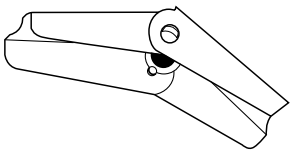

One rear wall template- Not Actual Size
(3 pieces mounting plate only)

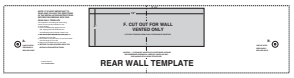

NOTE: You need to install at least two lag screws into a 2" x 4" stud and four anchor bolts into the wall. and the mounting area must meet the 150 lbs. weight requirement.

Parts, Tools, Materials

You will need the following tools and materials for the installation:

Carton or other heavy material for covering the counter top.

Clear Tape
(for taping the templates to the wall)

Stud Finder or Thin Nail

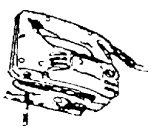

Saber Saw
(for cutting vent holes for roof or wall vending)

Keyhole Saw (for the power cord hole)

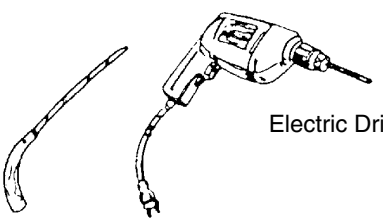

3/8" and 3/4" wood drill bits

1/2" and 3/16"
drill bits

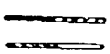

Phillips Screwdriver
(for the screws)

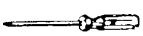

Pencil

Flat Blade Screwdriver
(for the toggle bolts)

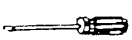

Plumb Line

Measuring Tape
(metal preferred)

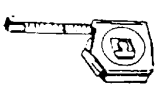

Duct Tape

Small Side Cutters or Tin Snips

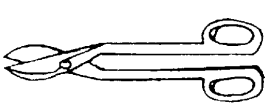

Caulking Gun

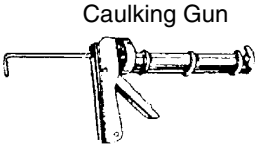

- If you have brick or masonry walls, you will need special hardware and tools.
- The ductwork you need for the installation is not included. All wall and roof caps must have a back-draft damper. (Shown on page 4).

STEP 1: *Prepare The Electrical Connection*

⚠ W A R N I N G ⚠

AVOID ELECTRICAL SHOCK! THIS APPLIANCE MUST BE GROUNDED!

1. Locate the grounded electric outlet for this oven in the cabinet above the oven, as shown in Figure 5.

   NOTE: The outlet should be on a circuit dedicated to the microwave oven (120V, 60 Hz., AC only) with a 15 or 20A fused electrical supply.

   IMPORTANT: If you do not have the proper wall outlet, you MUST have one installed by a qualified electrician.

2. You will cut the hole for the power supply cord (shown in Figure 5) later when you prepare the wall and upper cabinet in Step 4.
   NOTE: Do not use an extension cord.
   Keep the power cord dry and do not pinch or crush it.

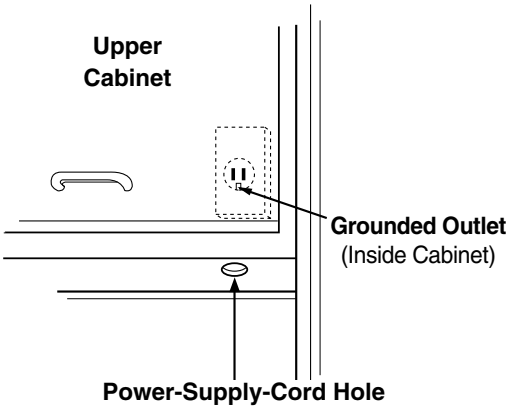

Figure 5

⚠ W A R N I N G ⚠

Improper grounding could result in electric shock or other personal injury.

- DO NOT, UNDER ANY CIRCUMSTANCES, REMOVE THE POWER SUPPLY CORD GROUNDING PRONG!
- This appliance MUST be grounded!

STEP 2: *Prepare The Venting System*

NOTE: The ductwork you need for outside ventilation is not included with your oven. The standard ductwork fittings and length are shown in Figure 10, page 9.

⚠ W A R N I N G ⚠

THIS OVEN MUST BE PROPERLY VENTED!

You may vent your oven in one of three ways. However, do NOT vent into a wall cavity, an attic, or an unused area.

- **Roof-venting** If your oven is located on an outside wall near the roof, as in Figures 7 (3 1/4" x 10" duct) and Figure 9 (6" round duct.)
- **Wall-venting** If your oven is located on an outside wall of your house, as in Figure 6 (3 1/4" x 10" duct) and Figure 9 (6" round duct.)
- **Room-venting** If your oven is located on an inside wall of your house, as in Figure 8.

NOTE: If you choose the rear exhaust method (roof or wall-venting), be sure there is enough clearance within the wall for the exhaust duct.

Wall Venting

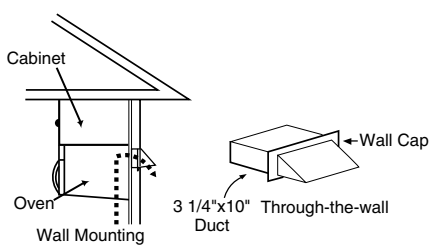

Figure 6

Roof Venting

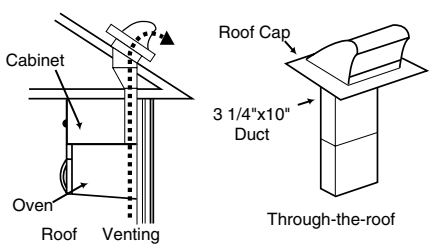

Figure 7

REMEMBER AS YOU INSTALL THE VENTING:

- Keep the length of the ductwork and the number of elbows to a minimum to ventilate your oven efficiently. See examples on page 9.
- Keep the size of the ductwork the same.
- Do not install two elbows together.
- Use duct tape to seal all joints in the duct system.
- Use caulking to seal the exterior wall or roof opening around the cap.

Room Venting

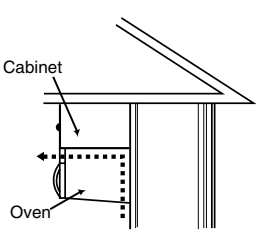

Figure 8

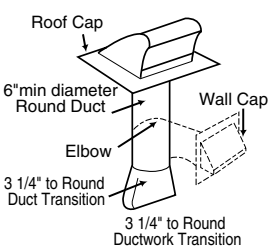

Figure 9

STEP 2: *Prepare The Venting System*

Standard Fittings

NOTE: If the existing duct is round, you must use a rectangular-to-round adapter, with a rectangular 3" extension duct installed between the damper assembly and the adapter to prevent the exhaust damper's sticking.

Duct Length

The total length of the duct system, including straight duct, elbows, transitions, and wall or roof caps **must not exceed 140 feet.**

For best performance, do not use more than three 90 degree elbows, and keep the length as short as possible.

Below are the standard fittings and their equivalent length in feet.

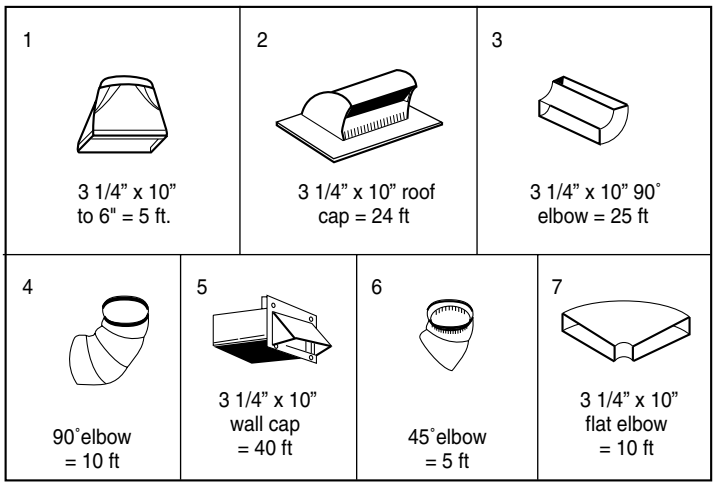

Figure 10

To calculate the equivalent length of each duct piece used, see the examples below.

Examples

For 3 1/4" x 10" SYSTEMS

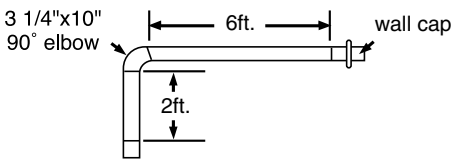

1 3 1/4" x 10" 90° elbow	=	25 ft.
1 Wall Cap	=	40 ft.
8 feet straight duct	=	8 ft.
TOTAL LENGTH	**=**	**73 ft.**

For 6" ROUND SYSTEMS

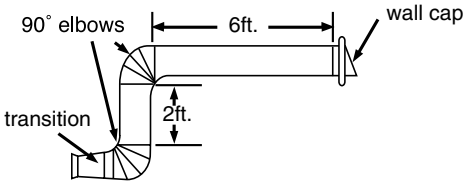

1 transition	=	5 ft.
2 90° elbows	=	20 ft.
1 Wall Cap	=	40 ft.
8 feet straight	=	8 ft.
TOTAL LENGTH	**=**	**73 ft.**

STEP 3: *Prepare The Venting Blower*

Your microwave oven is shipped with the blower assembled for roof venting. You need to adjust the blower if you want wall-venting or room-vented (recirculating) installation.

⚠ W A R N I N G ⚠

ELECTRICAL SHOCK HAZARD! UNPLUG UNIT BEFORE WORKING ON IT.

• DO NOT PULL OR STRETCH THE BLOWER WIRING! Pulling and stretching the blower wiring could result in electrical shock.

REMOVE THE MOUNTING PLATE:

1. Remove any shipping materials and parts from inside the microwave oven.
2. Cover the counter top or cooktop with a thick, protective covering to protect it from damage and dirt. See Figure 11.
   NOTE: If you have a free-standing range, disconnect it, move it onto a piece of cardboard or hardboard and pull it away from the wall, so that you can get closer to the upper cabinet and back wall for easier measuring and drilling.
3. Remove mounting plate screw(s) (1 or 2 screws) from the mounting plate as shown and discard the screws. See Figure 12.
4. This plate will be used as the rear mounting plate. (It will be used to locate and mark the mounting holes on the rear wall.)
5. Locate exhaust adaptor, grease filters and hardware packet.
6. At this point, remove any adhesive tape (if there is any), on the exhaust adaptor, the grease filters and the power supply cord.

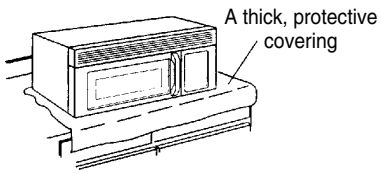

Figure 11

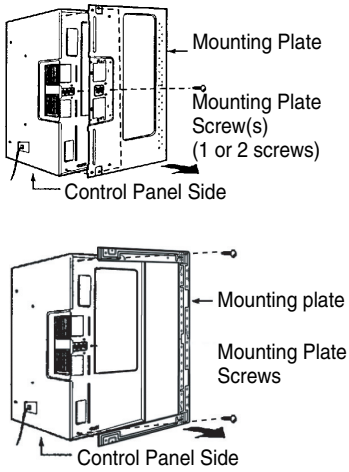

Figure 12

ROOF-VENTED INSTALLATION:

This oven is shipped assembled for roof-vented.

1. Attach the exhaust adaptor to the blower plate by sliding it into the guides. See Figure 13.

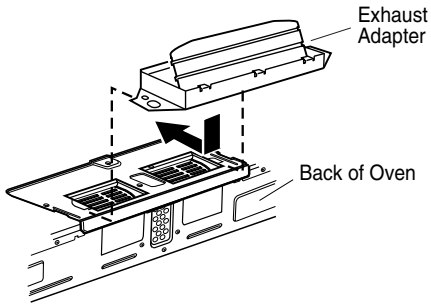

Figure 13

STEP 3: *Prepare The Venting Blower*

WALL-VENTED INSTALLATION:

1. Remove one blower unit mounting screw and one or several blower plate mounting screw(s). Remove the blower plate from cabinet. See Figure 14.
2. Carefully lift the blower unit out of the microwave oven.
3. Use side cutters or tin snips to cut and remove knockouts B from Back plate. Discard knockouts. Be careful not to distort the plate. See Figure 15.
4. Reassemble the blower wire. See Figure 16.
5. Rotate the blower unit so that the exhaust ports face the rear of the cabinet. See Figure 17.
6. Place blower unit back into cabinet. Check that the exhaust ports face towards the rear of the cabinet. Be sure the wires are not pinched. See Figure 18.
7. Reattach the blower plate to cabinet so the exhaust ports and blower plate opening are aligned. Attach with one blower unit mounting screw and then one or several blower plate mounting screw(s). See Figure 19.

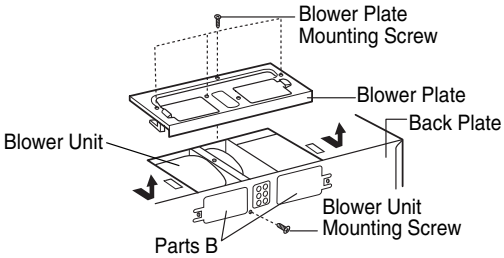

Figure 14

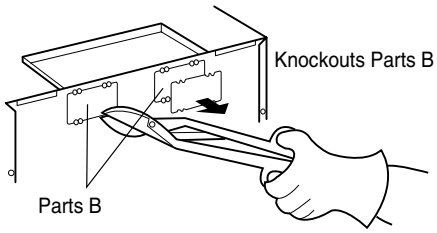

Figure 15

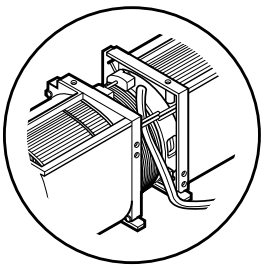

Figure 16

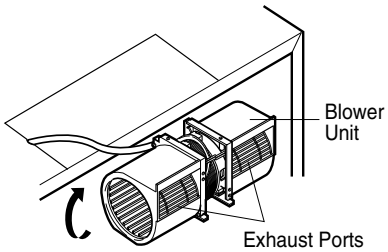

Figure 17

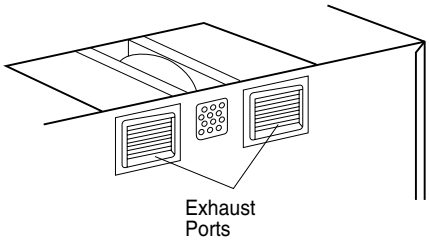

Figure 18

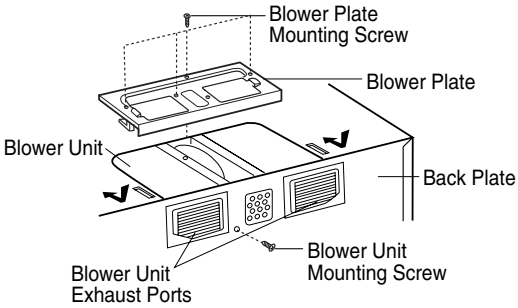

Figure 19

STEP 3: *Prepare The Venting Blower*

ROOM-VENTED (Recirculating) INSTALLATION:

1. Remove one blower unit mounting screw and one or several blower plate mounting screw(s). Remove the blower plate from cabinet. See Figure 20.
2. Carefully lift the blower unit out of the microwave oven.
3. Rotate blower unit 90° so the exhaust ports face the front of the cabinet. See Figure 21.
4. Place blower unit back into microwave oven.
5. Reattach blower plate to microwave oven. Attach with the one blower unit mounting screw and then the one or several blower plate mounting screw(s). See Figure 22.

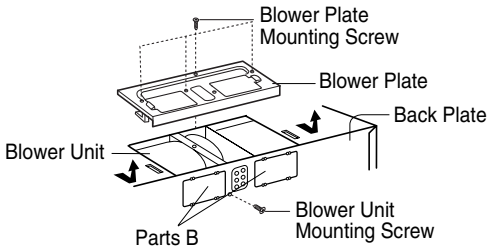

Figure 20

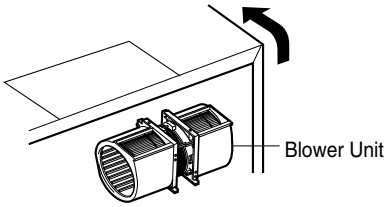

Figure 21

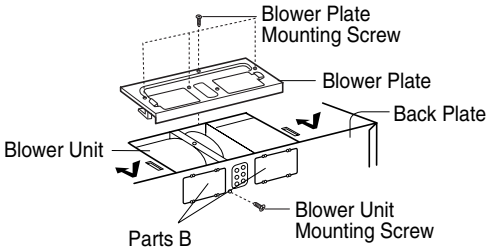

Figure 22

STEP 4: *Prepare The Wall & Upper Cabinet*

⚠ W A R N I N G ⚠

To avoid personal injury or property damage, do not attempt to install this microwave oven if you cannot find a wall stud.

Measure And Track/Tape Up The Templates

1. Using a plumb line and (metal) measuring tape, find and mark the vertical center line on the back wall, as in Figure 23.
2. Find and mark one or two points where the studs are on the wall. (Studs are normally 16 inches apart). Then measure and mark the stud locations. If you cannot find any wall stud, consult a local building contractor.

CAUTION

DO NOT ATTEMPT TO INSTALL THE MICRO-WAVE OVEN IF YOU CANNOT FIND A WALL STUD.

3. Line up the plumb line on the wall with the center line on the mounting plate.

NOTE: Be sure the minimum width is 30 inches and the distance from the top of the wall template to the range or counter top is at least 30 inches. See Figure 23.

4. Center mounting plate in operating by lining up the plumb line on wall with centerline on mounting plate. Make sure the minimum width is 30 inches and that the top of the mounting plate is located a minimum of 30 inches above the cooking surface. See Figure 24.

NOTE: If the cabinets are not plumb, adjust the mounting plate to the cabinets. If the front edge of the cabinet is lower than the back edge, adjust the mounting plate to be level with the cabinet front.

5. Measure the bottom of the upper cabinet frame. Trim the edges A, B, and C on the upper cabinet template so that the template will fit on the bottom of the upper cabinet. If upper cabinet has a recessed frame, trim the template so it fits inside the recessed area. Align the centerline of the upper cabinet template with the centerline of the mounting plate, then securely tape or tack the upper cabinet template in place. See Figure 24.

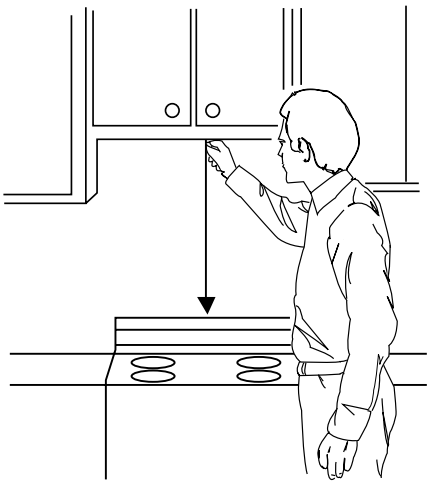

Figure 23

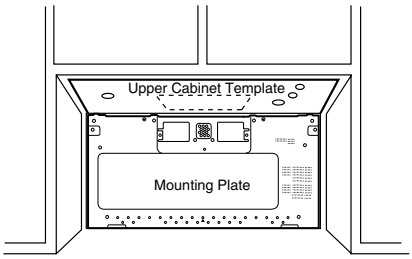

(1-piece Mounting Plate)

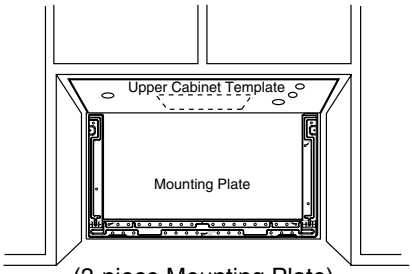

(3-piece Mounting Plate)

Figure 24

STEP 4: *Prepare The Wall & Upper Cabinet*

⚠ W A R N I N G ⚠

To avoid risk of personal injury, electrical shock or death:
- **Note where electrical outlets and electrical wires are before you drill into the wall.**
- **Locate and disconnect power to any electrical circuits that could be affected by installing this oven.**

⚠ W A R N I N G ⚠

To avoid risk of personal injury, electrical shock or death, cover the edge of the power supply cord hole with the power supply cord bushing.

Drill The Holes In The Wall And Upper Cabinet.

1. Drill holes on the circles. If there is a stud, drill a 3/16" hole for lag screws. If there is no stud, drill a 3/4" hole for toggle bolts. Make sure to use at least 2 lag screws in a stud, and 4 toggle screws in the drywall or the plaster.
2. Drill a 3/8” hole at points **J** and **K** on the upper cabinet template.

   NOTE: If the bottom of the upper cabinet is recessed 3/4" or more, you will need 2"x 2" filler blocks (not included) to provide additional support for the bolts. See Figure 25.
   - Mark the center of each filler block and drill a 3/8” diameter hole at the marks.
   - Align filler blocks over the two openings in the top of the microwave oven cabinet and attach to cabinet with masking tape. See Figure 26.
3. Cut or drill a 2" diameter hole at the area marked M. Power supply cord hole on the upper cabinet template. If the upper cabinet is metal, you will need to cover the edge of the hole with the power supply cord bushing (supplied) to prevent damage to the cord from the rough metal edge.
4. Cut out the venting areas (with the saber saw):
   - Roof-Vented: cut out the shaded area marked L on the upper cabinet template.
   - Wall-Vented: Tape the rear wall template to the rear wall, lining up with the holes previously drilled for holes A and B in the plate. Cut out the shaded area marked F on the REAR WALL TEMPLATE.
   - Room-Vented: go to STEP 5, INSTALL THE MOUNTING PLATE, located on page 15.
5. Complete whichever venting system you have chosen. Use caulking compound to seal the exterior wall or roof opening around the wall cap or roof cap.

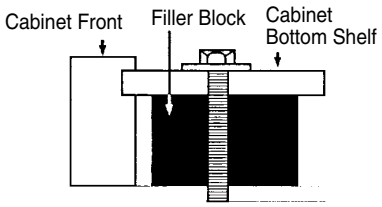

Figure 25

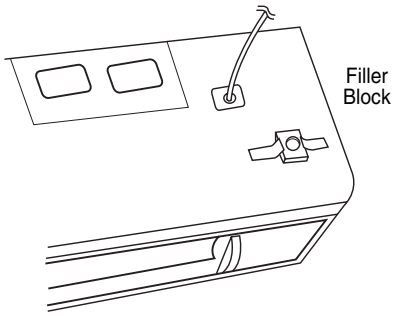

Figure 26

STEP 5: *Install The Mounting Plate*

The Oven Must Be Connected To At Least One

Wall Stud.

1. Draw a vertical line on the wall at the center of the 30" wide space. Use the mounting plate as the template for the rear wall. Place the mounting plate on the wall, making sure that the tabs are against the bottom of the cabinet. Line up the notch and center line on the mounting plate to the center line on the wall.
2. While holding the mounting plate with one hand, draw circles on the wall at holes A, B, C, and D. Four holes must be used for mounting. If the holes are not used, the installation will not be secure. Installer must use these holes for proper installation. Use toggle bolts through these holes unless one of them lines up with a stud. Use a wood screw for studs.

NOTE: Draw a fifth circle inside area E, through one of the bottom holes to match the location of a stud. For wall-vented: The oven requires a rear wall cutout opening for the rear wall duct and the exhaust adaptor must be attached to the mounting plate. See the next page on how to prepare the rear wall cutout opening and the exhaust adaptor/mounting plate for wall-vented.

3. Drill holes on the circles. If there is a stud, drill a 3/16 hole for lag screws. If there is no stud, drill a 5/8 hole for toggle bolts. Make sure to use at least 1 lag screw in a stud, and 4 toggle bolts in the drywall or the plaster.
4. Attach the plate to the wall. To use spring toggle head bolts: Remove the toggle wings from the bolts. Insert the bolts into the mounting plate and replace the spring toggle head to 3/4 past the bolt ends. Insert the spring toggle head into the holes in the wall to mount the plate. You may pull forward on the plate to help in tightening the toggle bolts. Tighten all bolts.

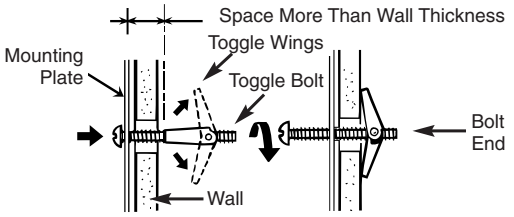

Figure 28

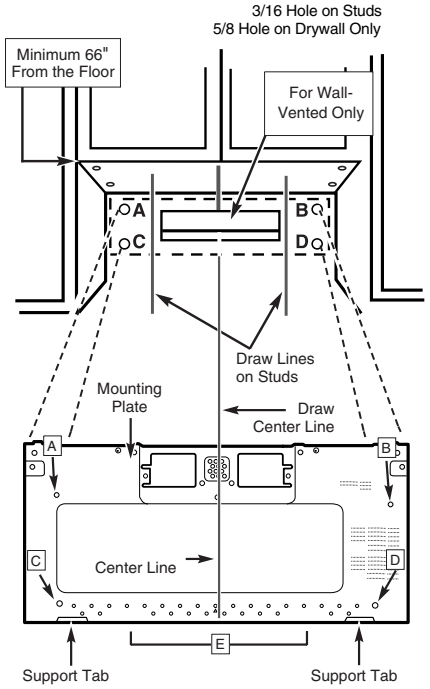

(1-piece Mounting Plate)

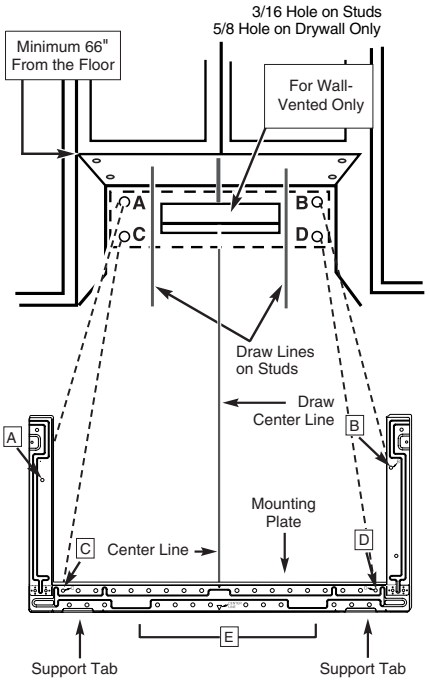

(3-piece Mounting Plate)

Figure 27

STEP 5: *Install The Mounting Plate*

For Wall-Vented

- Make the box cutout for the rear wall duct.
  - 1-piece mounting plate:
    Using a pencil, put dots through slots F and G, and through holes H and I. Remove the mounting plate and draw lines extending through the points. This will give the location and size of the box cutout for the rear wall duct. (Figure 29)
  - 3-piece mounting plate:
    Use the wall template to determine the location and size of the box cutout for the rear wall duct.
- Attach the exhaust adaptor to the rear mounting plate (back plate) wall side. Push in securely until it is past the top locking tabs and in the lower locking tabs. Take care to assure the damper hinge is installed so that it is at the top and that the damper swings freely.
- Carefully guide the exhaust adaptor, now attached to the mounting plate, into the house duct. Before using the screws to attach the plate to the wall. This will assure proper alignment for installation.
- After completing the installation of the mounting plate, again check the rear damper for free movement to assure it will operate properly.

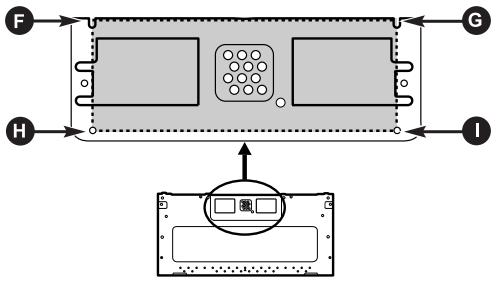

Figure 29

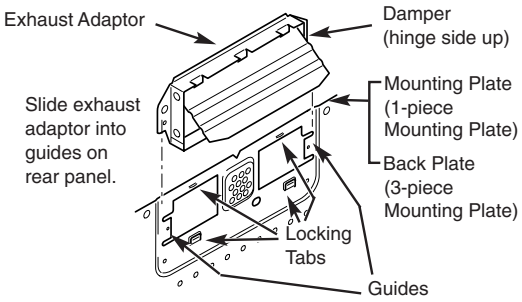

Figure 30

STEP 6: *Attach The Oven To The Wall*

⚠ W A R N I N G ⚠

To avoid risk of personal injury or property damage, you will need two people to install this microwave oven.

1. Carefully lift microwave oven and hang it on support tabs (See Figure 27) at the bottom of the mounting plate.Reaching through upper cabinet, thread power supply cord through the power supply cord hole in the bottom of the upper cabinet. See Figure 31.

2. Rotate the microwave oven upward so the top of oven is against the bottom of the upper cabinet or cabinet frame.

3. Then insert a bolt down through each hole in the upper cabinet bottom.See Figure 32. Tighten the bolts until the gap between the upper cabinet and microwave oven is closed.

4. If wall-vented or room-vented installation is used,go to No. 7 on the next page.

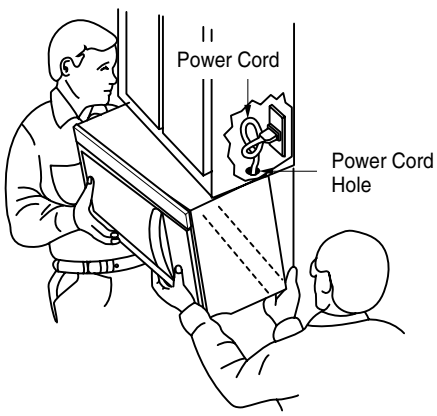

Figure 31

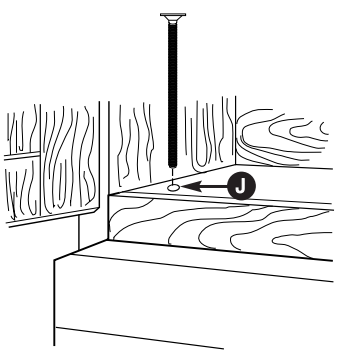

Figure 32

STEP 6: *Attach The Oven To The Wall*

5. Roof venting installation: See Figure 33.
   Install ductwork through the vent opening in the upper cabinet. Complete the venting system through the roof according to the method needed. See Prepare The Venting System STEP 2.
   Use caulking gun to seal the exterior roof opening around the exhaust cap. See Figure 7.

6. Use the power supply cord clamp to bundle the power supply cord. Install the power supply cord clamp, using a screw as shown in Figure 34, to inside of the cabinet.

7. Grasp filter screen with one hand holding the ring and the other hand holding the opposite end. Insert the end of the filter screen without ring into the opening and slide towards the side of the microwave oven. Insert ring end of filter screen into the opening and slide entire screen towards the center of the microwave until screen is securely in position. Repeat for other filter screen. See Figure 35.

8. Plug in the power supply cord.

9. Read your Owner's Manual, then check the operation of your microwave oven.

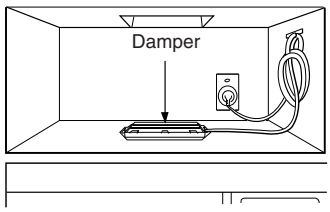

Figure 33

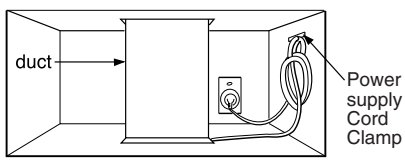

Figure 34

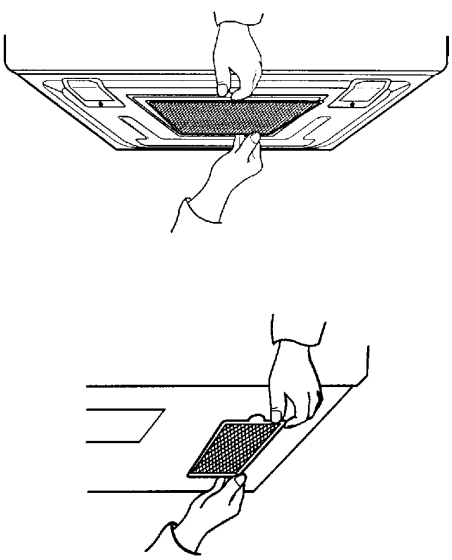

Figure 35