website http://www.lgservice.com
e-mail http://www.lgeservice.com/techsup.html

LG

ENGLISH

ESPAÑOL

LG
Air Conditioner
INSTALLATION MANUAL

MPS Variable

IMPORTANT

- **Please read this instruction sheet completely before installing the product.**
- **When the power cord is damaged, replacement work shall be performed by authorized personnel only.**
- **Installation work must be performed in accordance with the national wiring standards by authorized personnel only.**

TABLE OF CONTENTS

Installation Requirements	Required Tools
The following should be always observed for safety .....3~5	
Installation of indoor, outdoor unit .....6~12	❏ Level gauge ❏ Screw driver ❏ Electric drill ❏ Hole core drill (ø50mm) ❏ Horizontal meter
Flaring work and connection of piping.....13~16	❏ Flaring tool set ❏ Specified torque wrenches 1.8kg.m, 4.2kg.m, 5.5kg.m, 6.6kg.m (different depending on model No.) ❏ Spanner .....Half union
Connecting the Cable between Indoor Unit and Outdoor Unit .....17~18	❏ A glass of water ❏ Screw driver
Checking the Drainage, Forming the Pipings and Long pipe Setting .....19~20	❏ Hexagonal wrench(4mm) ❏ Gas-leak detector ❏ Vacuum pump ❏ Gauge manifold
Air Purging.....21~22	
Panel Front Assembly 23	
Test running.....24	❏ Owner's manual ❏ Thermometer ❏ Holder Remote Control
Combination indoor units 25	
Combination table of Models.....26	

ENGLISH

Installation Parts Provided

Standard Type

Installation plate	Type "A" screws and plastic anchors
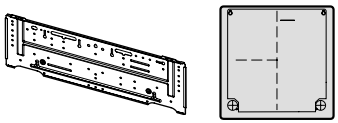	
Type "B" screws	Holder Remote Control
	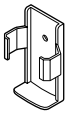

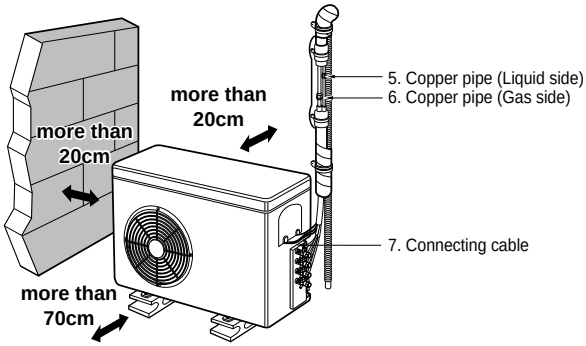

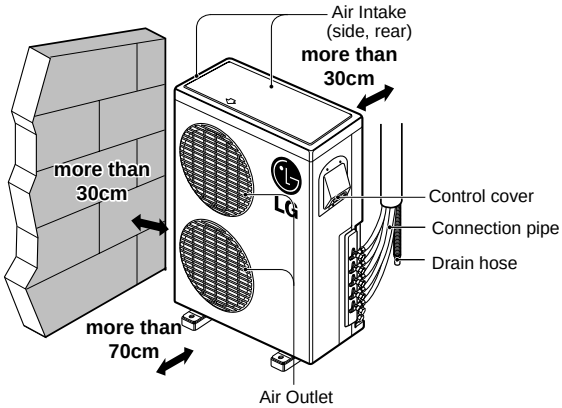

Safety Precautions

To prevent injury to the user or other people and property damage, the following instructions must be followed.

■ Incorrect operation due to ignoring instruction will cause harm or damage. The seriousness is classified by the following indications.

⚠WARNING	This symbol indicates the possibility of death or serious injury.
⚠CAUTION	This symbol indicates the possibility of injury or damage.

■ Meanings of symbols used in this manual are as shown below.

⃠	**Be sure not to do.**
❗	**Be sure to follow the instruction.**

⚠WARNING

Do not disassemble or repair the product.

• Contact your dealer or service center.

Always earth the product.

• It will cause fire or electric shock.

Do not handle the flamable gas or explosive materials near the product.

• Otherwise, it may cause fire or failure of product.

Do not install where flamable gas could leak.

• Otherwise, it may cause esplosion or fire.

Do not install the product on an defected installation stand.

• Otherwise, It may cause injury or accident.

Be cautious when unpack and install the product.

• Sharp edges could cause injury.

For installation, always contact the dealer or service center.

• Otherwise, it may cause fire, electric shock, explosion or injury."

Do not install the product on an defected installation stand.

• Otherwise, It may cause injury or accident

For electric work, contact the dealer or service center.

• Otherwise, It will cause fire or electric shock.

Do not use damaged power cable.

• It will cause fire or electric shock.

Always intstall an circuit breaker and main breaker.

- No installation may cause fire and electric shock.

If strange sound, smell or smoke come from product, turn the breaker off or disconnect the power supply cable.

- Otherwise, it may cause electric shock or fire.

Cover the electric part.

- Otherwise, it may cause fire or electric shock.

Do not open the suction inlet of the product during operation.

- Otherwise, it may cause electric shock or failure.

Do not step or put anyting on the product.

- Otherwise, it may cause personal injury and failure of product.

Do not touch(operate) product with wet hands.

- Otherwise, it may cause fire or electric shock.

Do not put the heater, etc. near the power cable.

- Otherwise, it may cause fire and electric shock.

Do not turn the breaker on/off or connect/disconnect the power supply plug during operation.

- Otherwise, it may cause fire or electric shock.

Do not touch the metal parts of the product when removing the air filter.

- Otherwise, it may cause personal injury.

⚠ CAUTION

Always inspect gas leakage after installation and repair of product.

- Otherwise, it may cause failure of product.

Keep the level even in installing the product.

- Otherwise, it may cause vibration or water leakage.

Install the drain hose to ensure that drain can be securely done.

- Otherwise, it may cause water leakage.

Do not install the product where the noise or hot wind from the outdoor unit could give any casualty to the neighborhood

- Otherwise, it may cause dispute with the neighborhoods.

Installation of Indoor, Outdoor Unit

Read completely, then follow step by step.

Select the best location

Indoor unit

1. Do not have any heat or steam near the unit.
2. Select a place where there are no obstacles in front of the unit.
3. Make sure that condensation drainage can be conveniently routed away.
4. Do not install near a doorway.
5. Ensure the spaces indicated by arrows from the wall, ceiling, fence or other obstacles.
6. Use a stud finder to locate studs to prevent unnecessary damage to the wall.

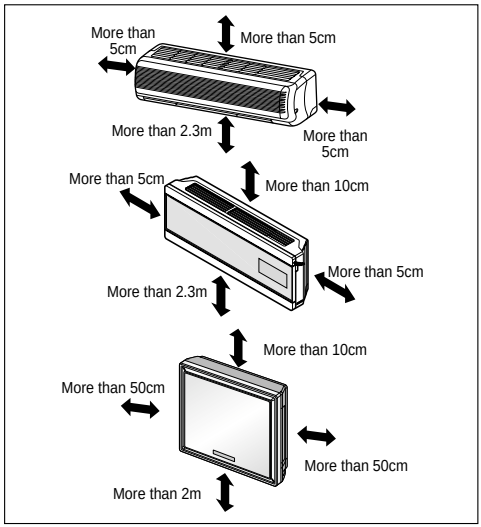

CAUTION: Install the indoor unit on the wall where the height from the floors more than 2.3 meters.

Outdoor unit

1. If an awning is built over the unit to prevent direct sunlight or rain exposure, make sure that heat radiation from the condenser is not restricted.
2. Ensure that the spaces indicated by arrows around front, back and side of the unit.
3. Do not place animals and plants in the path of the warm air.
4. Take the air conditioner weight into account and select a place where noise and vibration are minimum.
5. Select a place so that the warm air and noise from the air conditioner do not disturb neighbors.

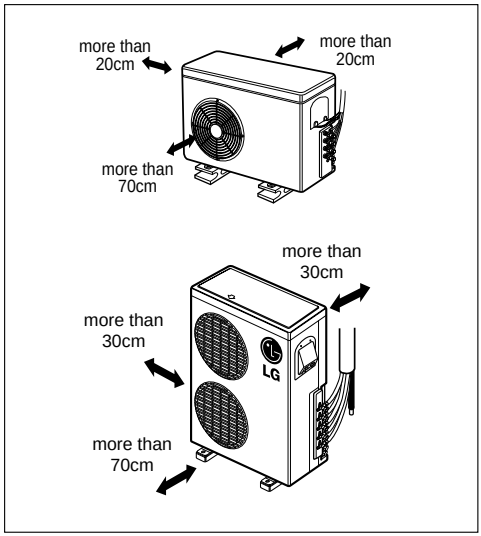

Rooftop Installations:

If the outdoor unit is installed on a roof structure, be sure to level the unit. Ensure the roof structure and anchoring method are adequate for the unit location. Consult local codes regarding rooftop mounting.

ENGLISH

Piping length and elevation

Multi Piping Type

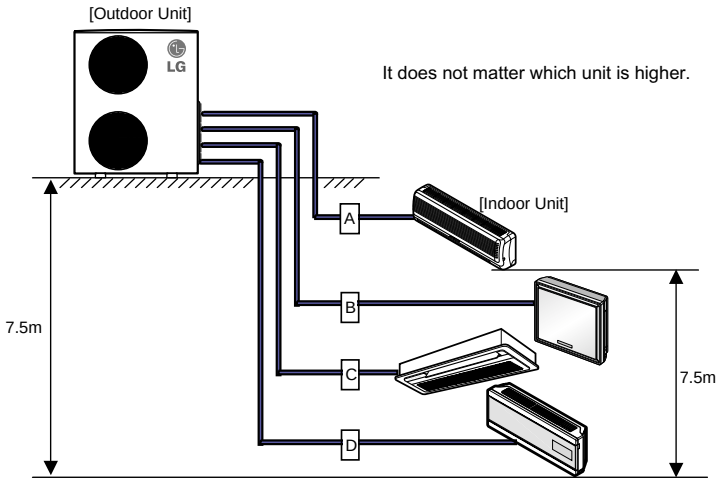

Model [Outdoor Unit]	Sandard Length	Max piping					Max total piping length	Additional Charge	Pipe Size(Gas)	
	A,B,C,D,E	A	B	C	D	E			Ø 9.52mm	over Ø 12.7mm
L3UC242FA0	7.5m	20m	20m	20m	-	-	40m(A+B+C)	over the total 22.5m pipe length	20g/m	20g/m
L4UC302FA0	7.5m	20m	20m	20m	20m	-	50m(A+B+C+D)	over the total 30m pipe length	30g/m	30g/m
L5UC362FA0	7.5m	20m	20m	20m	20m	20m	70m(A+B+C+D+E)	over the total 37.5m pipe length	30g/m	30g/m

❋ Extra refrigerant = (Extended length - Rated length) x Additional refrigerant

Distributor Type

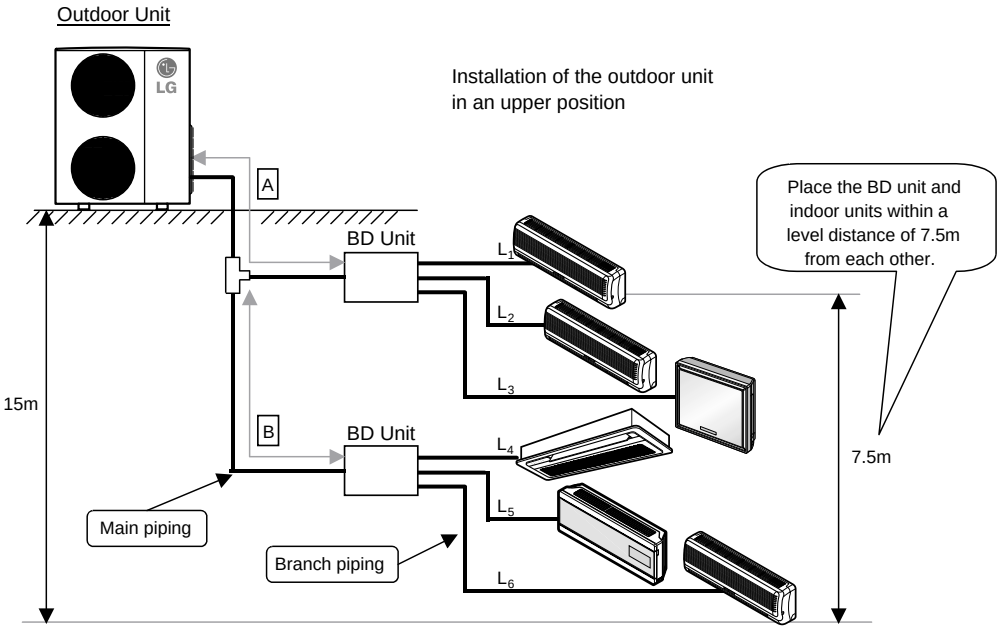

- Total main piping length (Max) : 25m(A + B)
- Total branch piping length (Max) : 70m(L_1+L_2+ L_3+L_4+L_5+L_6)
  → When total main pipe's length is 5m
- Each branch piping length (Max) : 15m(L_1,L_2,L_3,L_4,L_5,L_6)
- Total system piping length (Max) : 75m(A+B+ L_1+L_2+ L_3+L_4+L_5+L_6)

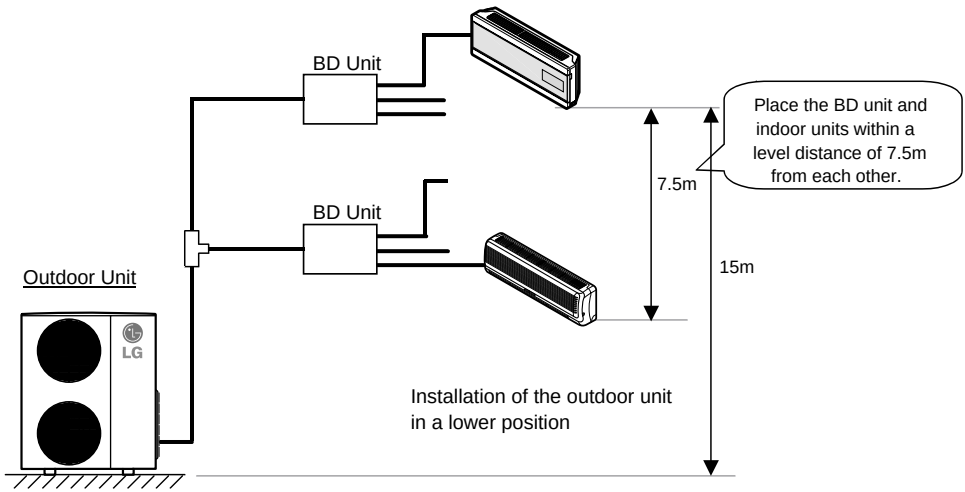

ENGLISH

Refrigerant charge

The calculation of the additional charge should be taken in account for the length of pipe.

Ⓐ L6UC502FA0 charge = 3400g

Ⓑ Additional charge (g)

= Total Main pipe length - rated length x 40g/m

+ Ø9.52 Branch pipe length - rated length x 20g/m

+ Over Ø12.7 Branch pipe length - rated length x 30g/m

(✻ Rated length)

Total Amount (g) = Ⓐ + Ⓑ

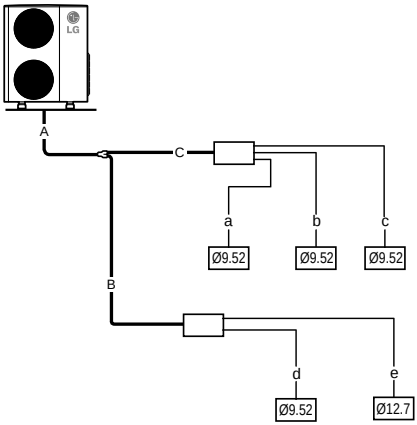

- Total main pipe(A+B+C)=25m
- Each branch pipe(a,b,c,d,e)=10m
- Additional Charge = (25-5) x 40
  +(10-6) x 20 x 4
  +(10-6) x 30
  = 1240g

CAUTION: Capacity is based on standard length and maximum allowance length is on the basis of reliability. Oil trap should be installed every 5~7 meters.

How to fix installation plate

The wall you select should be strong and solid enough to prevent vibration

1. Mount the installation plate on the wall with type "A" screws. If mounting the unit on a concrete wall, use anchor bolts.

• Mount the installation plate horizontally by aligning the centerline using a level.

2. Measure the wall and mark the centerline. It is also important to use caution concerning the location of the installation plate-routing of the wiring to power outlets is through the walls typically. Drilling the hole through the wall for piping connections must be done safely.

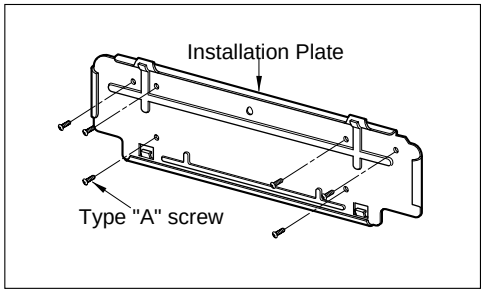

(SQ, SR, ST, SU)

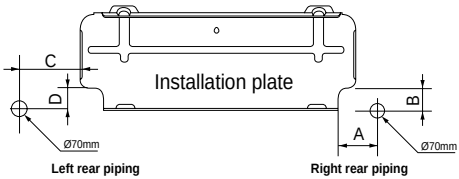

(SZ)

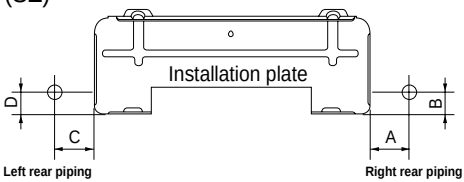

CHASSIS (Grade)	Distance (mm)			
	A	B	C	D
SQ(9k)	75	12	80	12
SR(12k)	0	40	20	40
ST(18k)	105	0	210	0
SZ(9k)	35	33	156	33
SU(12k)	92	44	67	44

ENGLISH

Preparing work for Installation (Artcool Type Only)

Open panel front

1. First, push the front panel backward and lift it up to remove the two screws.
2. The moment of lifting the both lower parts of panel front, you can hear sound this panel came out, In this time panel front is separated
3. After pull down this panel a bit, and separate connecting wire with product.

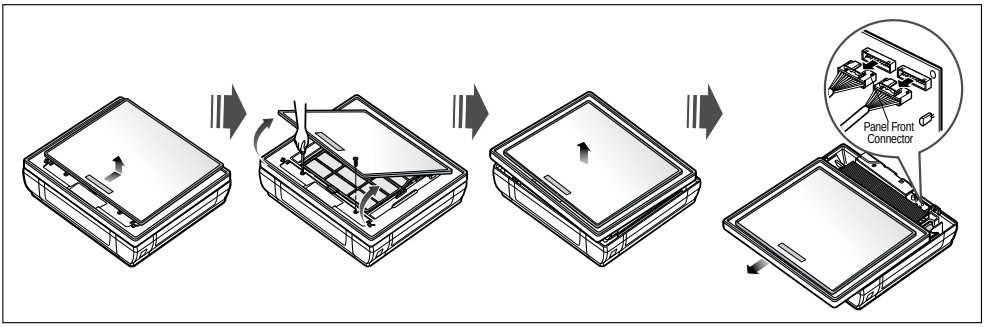

Remove cover pipe and cover side

1. Remove two screws(for fixing cover pipe)
2. Pull up the cover side of desired connecting direction, then cover side is separated.
3. In case of connecting direction is left or right, path through the hole of cover side.

CAUTION: After removing the pipe hole, cut the burr for safety.

NOTICE When connecting pipe path through rear wall, don't remove the hole.

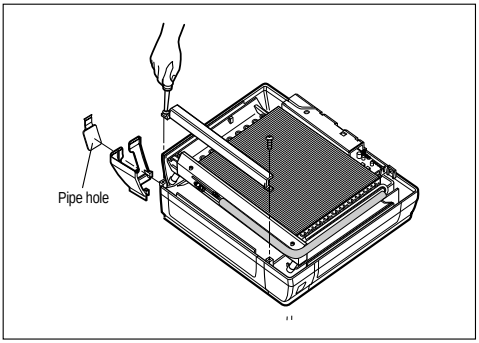

Drain hose junction

1. Remove the rubber stopple of desired direction of drainage.
2. As the following picture, Insert drain hose in the handle of drain pan, and join drain hose and connecting hose.

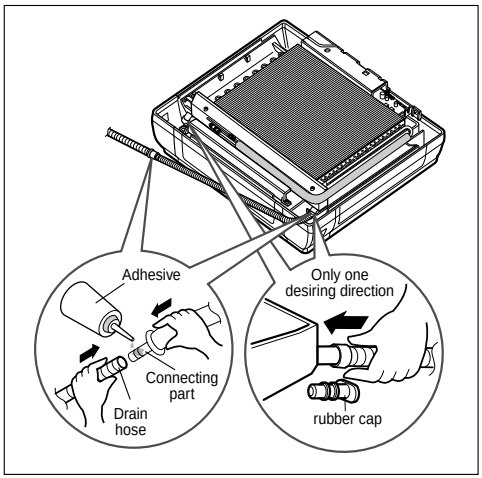

Sticking the installation guide map and fixing Indoor unit (Artcool Type Only)

Put an Installation Guide Map on the desired surface.

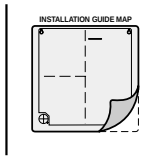

Adjust level even by level guage and fix to installation for reference on the well.

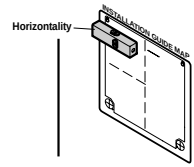

Make a hole with diameter of 6mm and depth of 30-35mm when piercing a screw point.

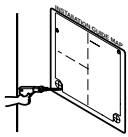

Drill the piercing part for connecting pipe as diameter 50mm. (In case of piercing rear surface)

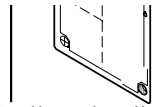

Refer to No. 5 on this page when making a hole in the wall.

Drive the fore plastic anchors into drilled points.

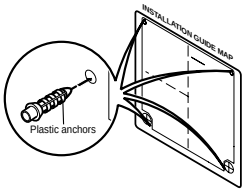

First, Drive the two points of the upper parts by screws (Leave 10mm for hanging product)

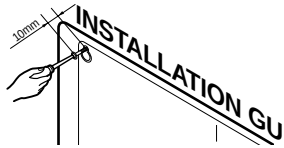

Hang the hole of product at the upper screws. (In this time, Remove the map)
(Falling attention)

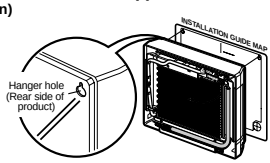

Drive the lower parts after facing the hole of product with plastic anchors, and fix completely the upper screws.

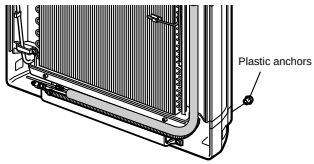

Check the fixed product with light power.

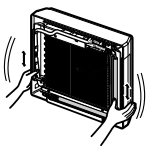

In case of nothing wrong in the matter, connect the pipe and the wire. (Installation manual reference)

Drill a hole in the wall

- Drill the piping hole with a ø70mm hole core drill. Drill the piping hole at either the right or the left with the hole slightly slanted to the outdoor side.

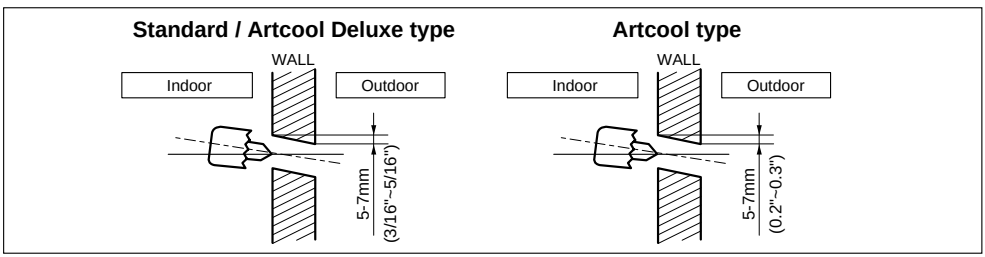

Flaring Work and Connection of Piping

Flaring work

Main cause for gas leakage is due to defect in flaring work. Carry out correct flaring work in the following procedure.

Cut the pipes and the cable.

1. Use the piping kit accessory or the pipes purchased locally.
2. Measure the distance between the indoor and the outdoor unit.
3. Cut the pipes a little longer than measured distance.
4. Cut the cable 1.5m longer than the pipe length.

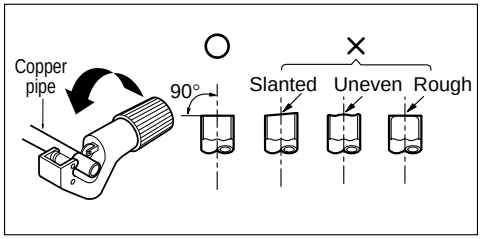

Burrs removal

1. Completely remove all burrs from the cut cross section of pipe/tube.
2. Put the end of the copper tube/pipe in a downward direction as you remove burrs in order to avoid dropping burrs into the tubing.

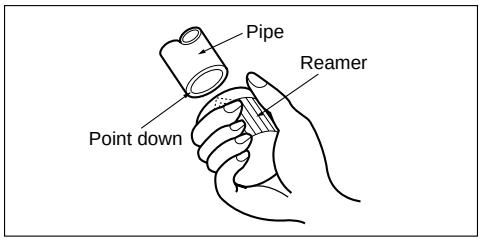

Putting nut on

- Remove flare nuts attached to indoor and outdoor unit, then put them on pipe/tube having completed burr removal.
  (not possible to put them on after flaring work)

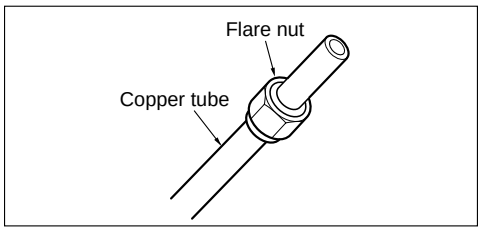

Flaring work

- Carry out flaring work using flaring tool as shown below.
- Firmly hold copper pipe in a die in the dimension shown in the table above.

Outside diameter		A
mm	inch	mm
Ø6.35	1/4	0~0.5
Ø9.52	3/8	0~0.5
Ø12.7	1/2	0~0.5
Ø15.88	5/8	0~1.0
Ø19.05	3/4	1.0~1.3

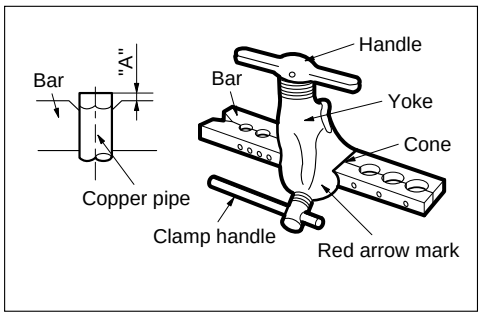

Check

1. Compare the flared work with figure below.
2. If flare is noted to be defective, cut off the flared section and do flaring work again.

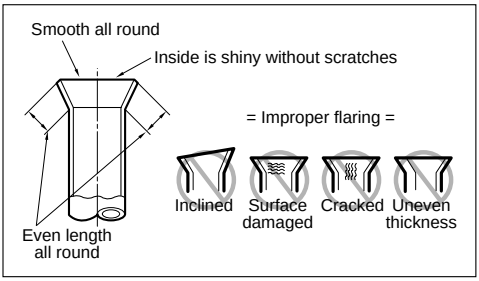

Connection of piping - Indoor

Preparing the indoor unit's piping and drain hose for installation through the wall.

1. Route the indoor tubing and the drain hose in the direction of rear left or right

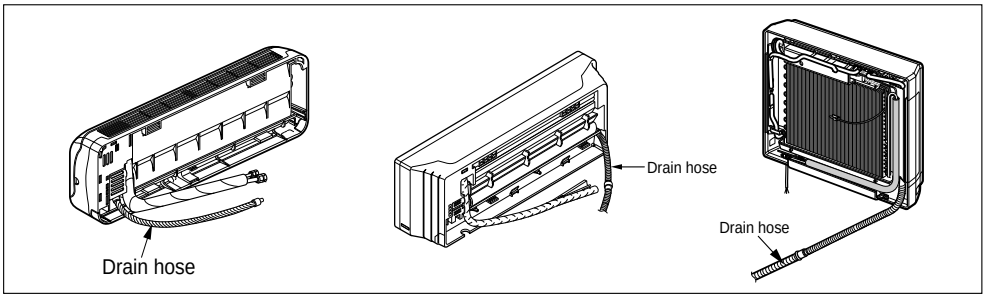

2. Tape the tubing, drain hose and the connecting cable. Be sure that the drain hose is located at the lowest side of the bundle. Locating at the upper side can cause drain pan to overflow inside the unit.

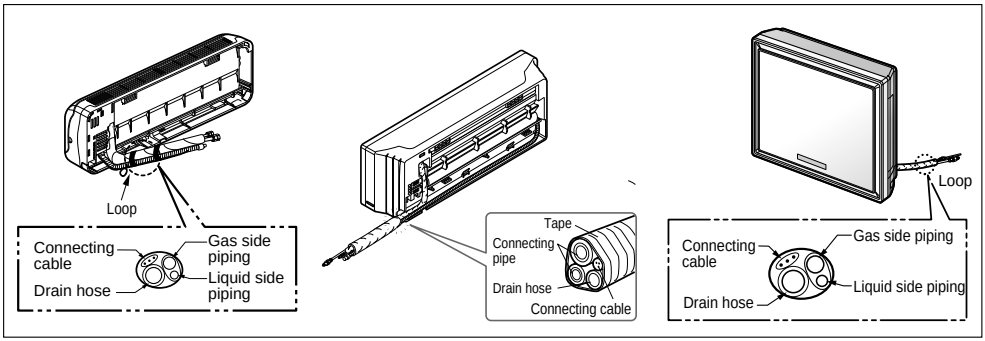

CAUTION: If the drain hose is routed inside the room, insulate the hose with an insulation material* so that dripping from "sweating"(condensation) will not damage furniture or floors.
***Foamed polyethylene or equivalent is recommended.**

ENGLISH

Indoor unit installation

1. Hook the indoor unit onto the upper portion of the installation plate.(Engage the two hooks of the rear top of the indoor unit with the upper edge of the installation plate.) Ensure that the hooks are properly seated on the installation plate by moving it left and right. Press the lower left and right sides of the unit against the installation plate until the hooks engage into their slots(clicking sound).

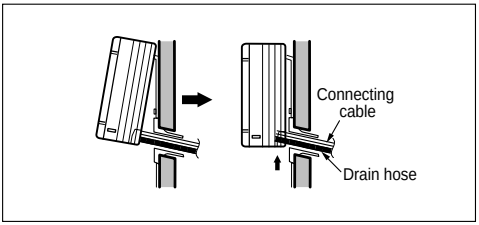

Connecting the pipings to the in door unit and drain hose to drain pipe

1. Align the center of the pipings and sufficiently tighten the flare nut by hand.
2. Tighten the flare nut with a wrench.

Outside diameter		Torque
mm	inch	kg·m
Ø6.35	1/4	1.8
Ø9.52	3/8	4.2
Ø12.7	1/2	5.5
Ø15.88	5/8	6.6
Ø19.05	3/4	6.6

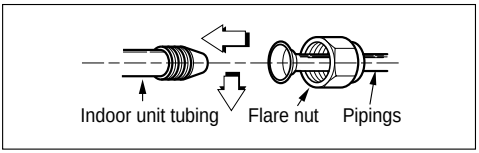

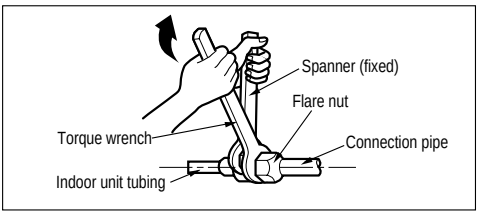

3. When extending the drain hose at the indoor unit, install the drain pipe.

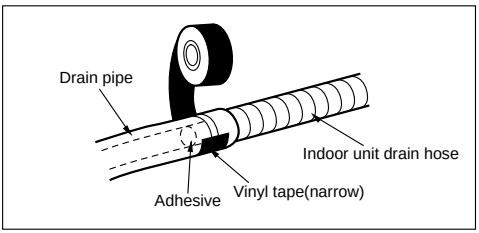

Wrap the insulation material around the connecting portion.

1. Overlap the connection pipe insulation material and the indoor unit pipe insulation material. Bind them together with vinyl tape so that there is no gap.
2. Wrap the area which accommodates the rear piping housing section with vinyl tape.

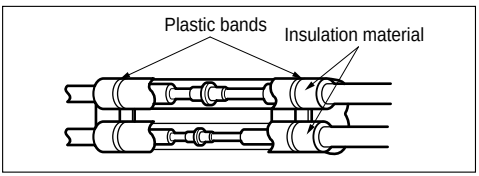

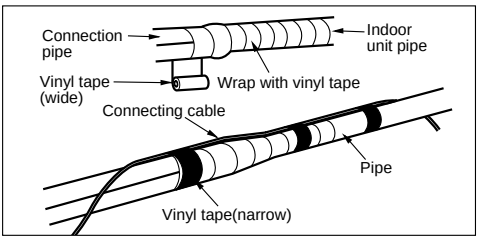

3. Bundle the piping and drain hose together by wrapping them with vinyl tape over the range within which they fit into the rear piping housing section.

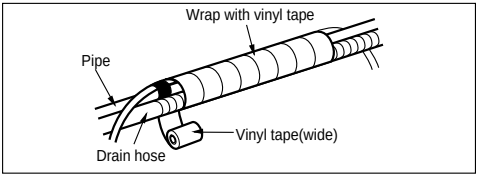

CAUTION: Installation Information (For right piping)
For right piping, follow the instruction below.

Good case

- Press on the upper side of clamp and unfold the tubing to downward slowly.

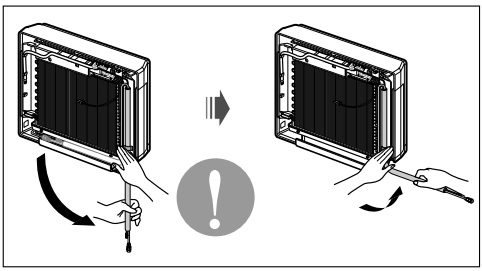

Bad case

- Following bending type from left to right could cause problem of pipe damage.

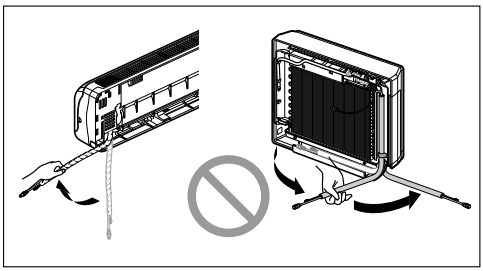

Connecting Pipings and the cable to Outdoor unit

Connecting the pipings to the Outdoor unit

1) When piping installation work you must be used the connector.

Indoor Units	Gas	Liquid
	A → B	
9/12/18k	Ø9.52→Ø12.7	Not available
24k	Ø9.52 →Ø15.88	Not available

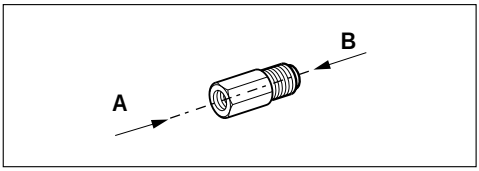

***Connecting pipe size**

Indoor Units	Gas side	Liquid side
8/9k	Ø9.52(3/8)	Ø6.35(1/4)
10/12/14/18k	Ø12.7(1/2)	Ø6.35(1/4)
24k	Ø15.88(5/8)	Ø6.35(1/4)

2) Align the center of the pipings and sufficiently tighten the flare nut by hand

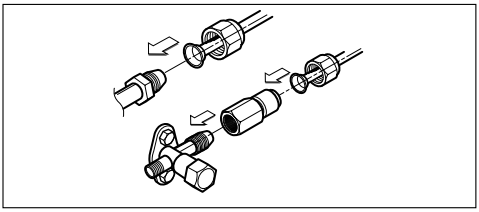

3) Finally, tighten the flare nut with torque wrench until the wrench clicks.

■ When tightening the flare nut with torque wrench, ensure the direction for tightening follows the arrow on the wrench.

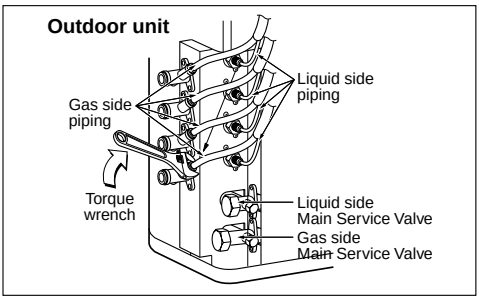

Connecting the Cable between Indoor Unit and Outdoor Unit

ENGLISH

Connect the cable to the Indoor unit.

Connect the cable to the indoor unit by connecting the wires to the terminals on the control board individually according to the outdoor unit connection. (Ensure that the color of the wires of the outdoor unit and the terminal No. are the same as those of the indoor unit.)
The earth wire should be longer than the common wires.
The circuit diagram is not subject to change without notice.
When installing, refer to the circuit diagram behind the panel front of Indoor Unit the wiring diagram on the Control Cover Inside Outdoor Unit.

CAUTION:
- **The circuit diagram is not subject to change without notice.**
- **Be sure to connect wires according to the wiring diagram.**
- **Connect the wires firmly, so that not to be pulled out easily.**
- **Connect the wires according to color codes by referring the wiring diagram.**

CAUTION: Provide a circuit breaker between power source and the unit as shown below.

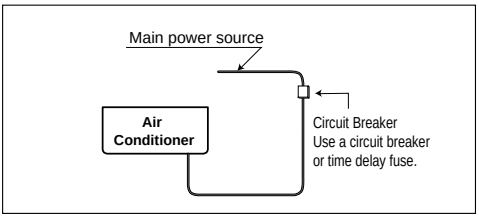

CAUTION: The power cord connected to the outdoor unit should be complied with the following specifications (Cable type approved by HAR or SAA).

(mm²)

NORMAL CROSS SECTIONAL AREA	Grade			
	24k	30k	36k	50k
	2.5	3.5	5.5	7.5
Cable Type	H05RN-F			

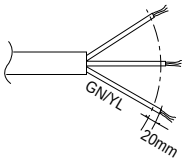

The power connecting cable connected to the indoor and outdoor unit should be complied with the following specifications (Type "B" approved by HAR or SAA).

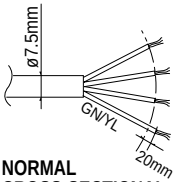

NORMAL CROSS-SECTIONAL AREA 0.75mm²
H05VV-F

Connect the cable to the Outdoor unit.

1. Remove the cover control from the unit by loosening the screw.
   Connect the wires to the terminals on the control board individually as the following.
2. Secure the cable onto the control board with the holder (clamper).
3. Refix the cover control to the original position with the screw.
4. Use a recongnized circuit breaker between the power source and the unit. A disconnection device to adequately disconnect all supply lines must be fitted.

Circuit Breaker	
24k~36k Btu	35A
50k Btu	50A

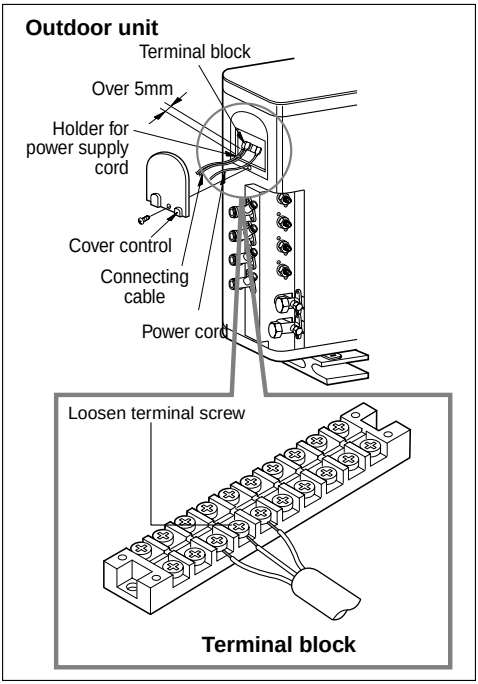

CAUTION: After the confirmation of the above conditions, prepare the wiring as follows.

1. **Never fail to have an individual power circuit specifically for the air conditioner. As for the method of wiring, be guided by the circuit diagram posted on the inside of control cover.**
2. **Firmly tighten the terminal screws to prevent them loosening. After tightening, pull the wires lightly to confirm that they do not move. (If they are loose the unit, the unit will not operate normally or it can cause burn-out of the wires.)**
3. **Specification of power source.**
4. **Confirm that electrical capacity is sufficient.**
5. **See to that the starting voltage is maintained at more than 90 percent of the rated voltage marked on the name plate.**
6. **Confirm that the cable thickness is as specified in the power source specification. (Particularly note the relation between cable length and thickness.**
7. **Do not install an earth leakage circuit breaker in a wet or moist area.**
8. **The following would be caused by voltage drop.**
   - **Vibration of a magnetic switch, which will damage the contact point, fuse breaking, disturbance of the normal function of the overload.**
9. **The means for disconnection from a power supply shall be incorporated in the fixed wiring and have an air gap contact separation of at least 3mm in each active(phase) conductors.**

Checking the Drainage, Forming the Pipings

ENGLISH

Checking the drainage

To check the drainage.

1. Pour a glass of water on the evaporator.
2. Ensure the water flows through the drain hose of the indoor unit without any leakage and goes out the drain exit.

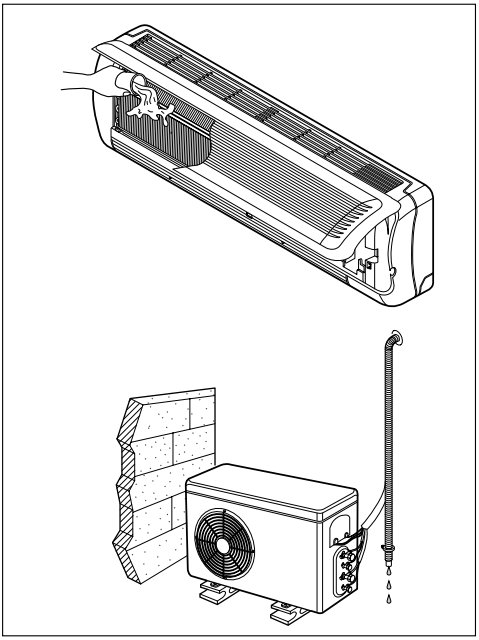

Drain piping

1. The drain hose should point downward for easy drain flow.

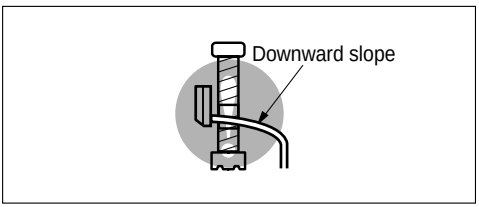

2. Do not make drain piping.

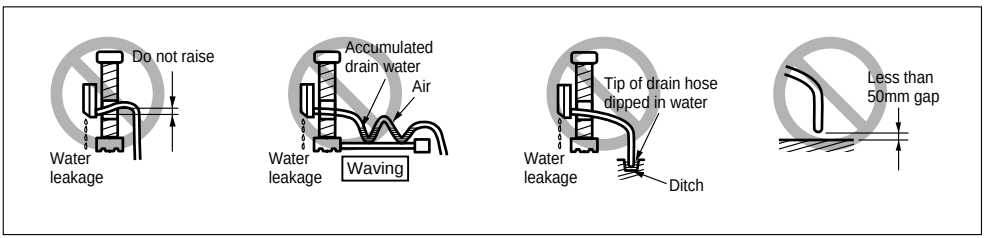

Forming the piping

Form the piping by wrapping the connecting portion of the indoor unit with insulation material and secure it with two kinds of vinyl tape.

- If you want to connect an additional drain hose, the end of the drain outlet should be routed above the ground. Secure the drain hose appropriately.

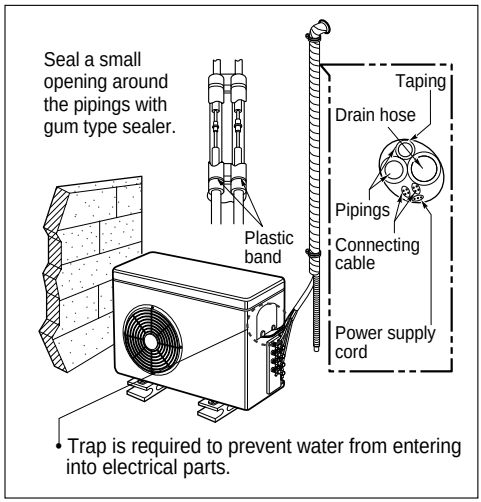

In cases where the outdoor unit is installed below the indoor unit perform the following.

1. Tape the piping, drain hose and connecting cable from down to up.
2. Secure the tapped piping along the exterior wall using saddle or equivalent.

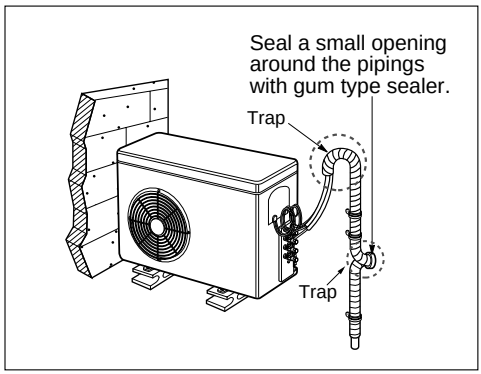

In cases where the Outdoor unit is installed above the Indoor unit perform the following.

1. Tape the piping and connecting cable from down to up.
2. Secure the taped piping along the exterior wall. Form a trap to prevent water entering the room.
3. Fix the piping onto the wall by saddle or equivalent.

ENGLISH

Air Purging and Evacuation

Air and moisture remaining in the refrigerant system have undesirable effects as indicated below.
1. Pressure in the system rises.
2. Operating current rises.
3. Cooling(or heating) efficiency drops.
4. Moisture in the refrigerant circuit may freeze and block capillary tubing.
5. Water may lead to corrosion of parts in the refrigeration system.

Therefore, the indoor/outdoor unit and connecting tube must be checked for leak tight, and vacuumed to remove incondensible gas and moisture in the system.

Checking method

Preparation

- Check that each tube(both liquid and gas side tubes) between the indoor and outdoor units have been properly connected and all wiring for the test run has been completed. Remove the service valve caps from both the gas and the liquid side on the outdoor unit. Check that both the liquid and the gas side service valves on the outdoor unit are kept closed at this stage.

Leakage test

- Connect the manifold valve(with pressure gauges) and dry nitrogen gas cylinder to this service port with charge hoses.

CAUTION: Be sure to use a manifold valve for leakage test. If it is not available, use a stop valve for this purpose. The "Hi" knob of the manifold valve must always be kept close.

- Pressurize the system to no more than 150 P.S.I.G. with dry nitrogen gas and close the cylinder valve when the gauge reading reached 150 P.S.I.G. Next, test for leaks with liquid soap.

CAUTION: To avoid nitrogen entering the refrigerant system in a liquid state, the top of the cylinder must be higher than its bottom when you pressurize the system. Usually, the cylinder is used in a vertical standing position.

1. Do a leakage test of all joints of the tubing(both indoor and outdoor) and both gas and liquid side service valves.
   Bubbles indicate a leak. Be sure to wipe off the soap with a clean cloth.
2. After the system is found to be free of leaks, relieve the nitrogen pressure by loosening the charge hose connector at the nitrogen cylinder. When the system pressure is reduced to normal, disconnect the hose from the cylinder.

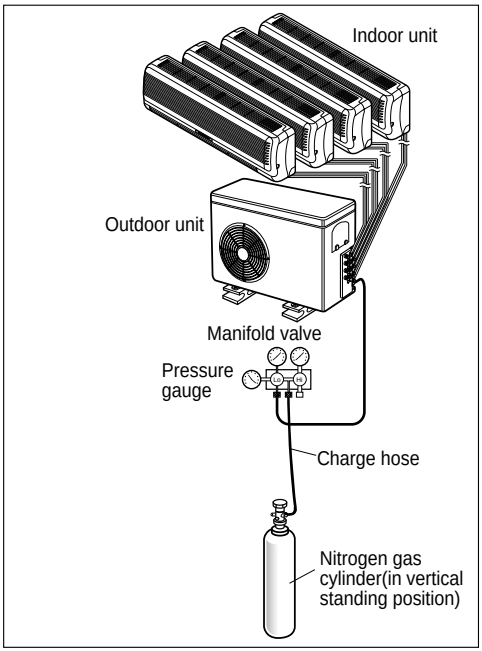

Soap water method

1. Remove the caps from the 2-way and 3-way valves.
2. Remove the service-port cap from the 3-way valve.
3. To open the 2-way valve turn the valve stem counterclockwise approximately 90°, wait for about 2~3 sec, and close it.
4. Apply a soap water or a liquid neutral detergent on the indoor unit connection or outdoor unit connections by a soft brush to check for leakage of the connecting points of the piping.
5. If bubbles come out, the pipes have leakage

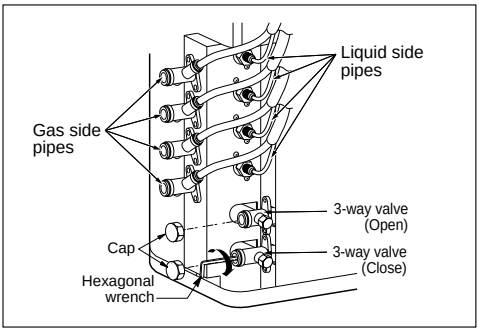

Evacuation

1. Connect the charge hose end described in the preceding steps to the vacuum pump to evacuate the tubing and indoor unit.
   Confirm the "Lo" knob of the manifold valve is open. Then, run the vacuum pump.
   The operation time for evacuation varies with tubing length and capacity of the pump. The following table shows the time required for evacuation.

Required time for evacuation when 30 gal/h vacuum pump is used	
If tubing length is less than 10m (33 ft)	If tubing length is longer than 10m (33 ft)
10 min. or more	15 min. or more

2. When the desired vacuum is reached, close the "Lo" knob of the manifold valve and stop the vacuum pump.

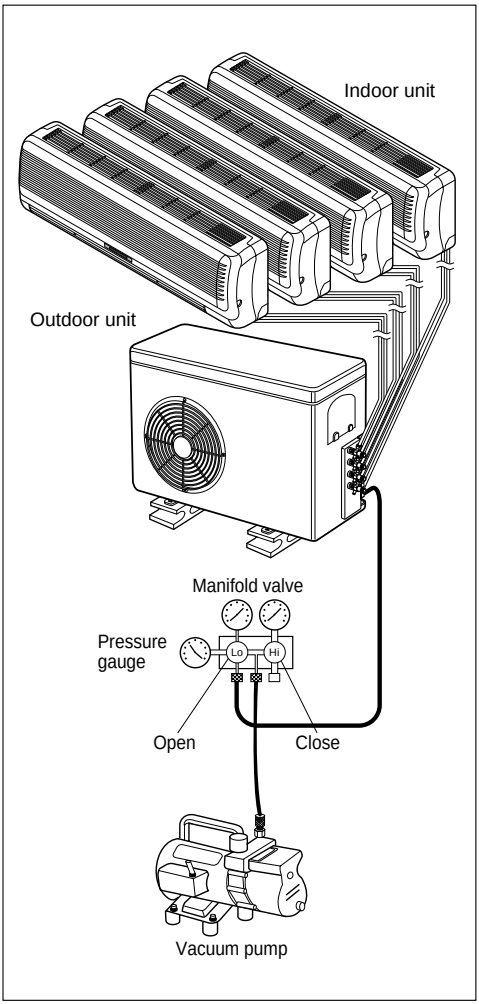

Finishing the job

1. With a service valve wrench, turn the valve stem of liquid side valve counter-clockwise to fully open the valve.
2. Turn the valve stem of gas side valve counter-clockwise to fully open the valve.
3. Loosen the charge hose connected to the gas side service port slightly to release the pressure, then remove the hose.
4. Replace the flare nut and its bonnet on the gas side service port and fasten the flare nut securely with an adjustable wrench. This process is very important to prevent leakage from the system.
5. Replace the valve caps at both gas and liquid side service valves and fasten them tight.

This completes air purging with a vacuum pump.
The air conditioner is now ready to test run.

Panel Front Assembly (Artcool type Only)

1. **First, Check the side cover assembly exactly, Fix power cord in the bottom groove of cover side left.**

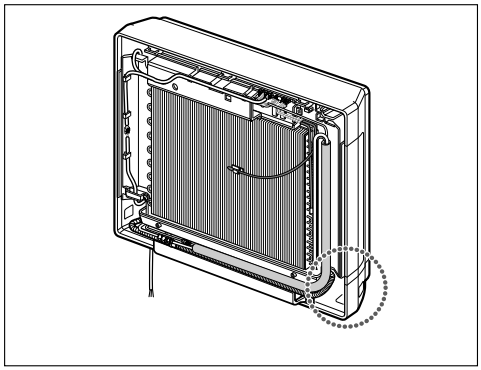

2. **Assemble connecting lead wire with controller and first fix the upper part of panel front, then match the lower part of panel front**

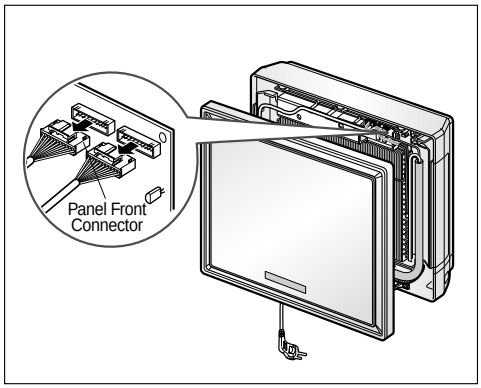

3. **Suspend hook of front panel in the groove after contract lower of 2 screws.**

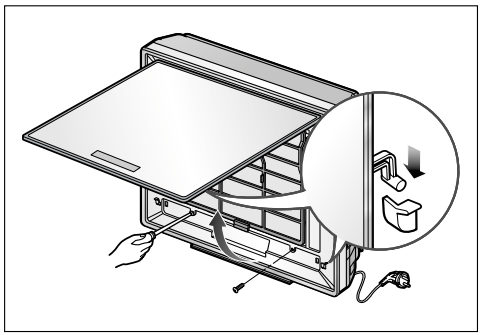

Test Running

1. Check that all tubing and wiring have been properly connected.
2. Check that the gas and liquid side service valves are fully open.

Prepare remote control

Remove the battery cover by pulling it according to the arrow direction.

Insert new batteries making sure that the (+) and (–) of battery are installed correctly.

Reattach the cover by pushing it back into position.

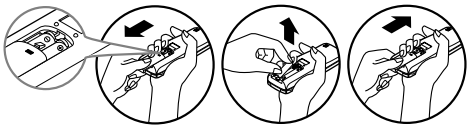

NOTICE :

- Use 2 AAA(1.5volt) batteries. Do not use rechargeable batteries.
- Remove the batteries from the remote control if the system is not going to be used for a long time.

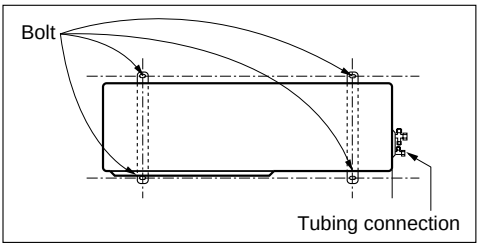

Evaluation of the performance

Operate unit for 15~20 minutes, then check the system refrigerant charge:

1. Measure the pressure of the gas side service valve.
2. Measure the temperature of the intake and discharge of air.
3. Ensure the difference between the intake temperature and the discharge is more than 8°C
4. For reference, the gas side pressure of optimum condition is as below.(Cooling)

Refrigerant	Outside ambient TEMP.	The pressure of the gas side service valve.
R-22	35°C (95°F)	4~5kg/cm²G(56.8~71.0 P.S.I.G.)
R-410A	35°C (95°F)	8.5~9.5kg/cm²G(120~135 P.S.I.G.)

NOTICE : If the actual pressure are higher than shown, the system is most likely over-charged, and charge should be removed. If the actual pressure are lower than shown, the system is most likely undercharged, and charge should be added.
The air conditioner is now ready for use.

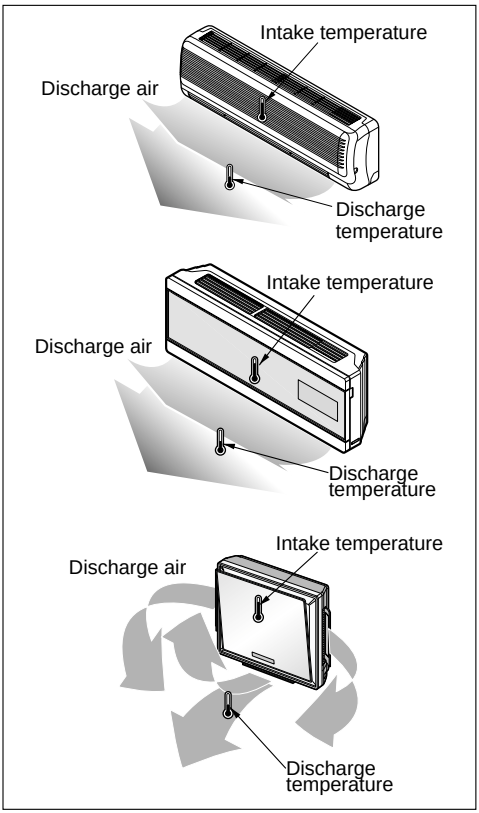

ENGLISH

Combination indoor units

The indoor units connectable to the outdoor unit are shown below.

Type	Chassis Name	Model Name			
		Capacity, Btu/h			
		9000	12000	18000	24000
Standard Type	SQ	■			
	SR		■		
	ST			■	
Artcool Deluxe Type	SZ	■			
	SU		■		
Artcool Type	SP1	■	■		
Ceiling Mounted Cassete Type 1Way	TC	■	■		
Ceiling concealed Duct (High Static)	BH				■
Ceiling concealed Duct (Low Static)	BT	■	■		
	BT1			■	

NOTICE : 1. The total capacity(in Btu/h unit) of connected indoor unit models represents the total sum of the figures expressed in the indoor model name.

2. Combinations in which the total capacity of the connected indoor units exceeds the capacity of the outdoor unit will reduce the capacity of each indoor unit below the rated capacity during simultaneous operation. Therefore, if circumstances allows, combine indoor units within the capacity of the outdoor unit

Combination table of Models

❋ This table shows available combination.
Above standard combination, suitable performance may not be obtained depending on operating condition.

24k (3 rooms)

	Combination (kBtu/h)			
	Unit-A	Unit-B	Unit-C	Total
1 unit	9			9
	12			12
	18			18
2 units	9	9		18
	9	12		21
	12	12		24
	9	18		27
3 units	9	9	9	27
	9	9	12	30

30k (4 rooms)

	Combination (kBtu/h)				
	Unit-A	Unit-B	Unit-C	Unit-D	Total
1 unit	9				9
	12				12
	18				18
2 units	9	9			18
	9	12			21
	9	18			27
	12	12			24
	12	18			30
3 units	9	9	9		27
	9	9	12		30
	9	9	18		36
	9	12	12		33
	12	12	12		36
4 units	9	9	9	9	36
	9	9	9	12	39

ENGLISH

36k (5 rooms)

	Combination (kBtu/h)					
	Unit-A	Unit-B	Unit-C	Unit-D	Unit-E	Total
1 units	9					9
	12					12
	18					18
2 units	9	9				18
	9	12				21
	12	12				24
	9	18				27
	12	18				30
	18	18				36
3 units	9	9	9			27
	9	9	12			30
	9	12	12			33
	12	12	12			36
	9	9	18			36
	9	12	18			39
	12	12	18			42
	9	18	18			45
4 units	9	9	9	9		36
	9	9	9	12		39
	9	9	12	12		42
	9	12	12	12		45
	9	9	9	18		45
5 units	9	9	9	9	9	45
	9	9	9	9	12	48

50k (6 rooms)

	Combination (kBtu/h)						
	Unit-A	Unit-B	Unit-C	Unit-D	Unit-E	Unit-F	Total
1 UNIT	9						9
	12						12
	18						18
	24						24
2 UNIT	9	9					18
	9	12					21
	12	12					24
	9	18					27
	12	18					30
	9	24					33
	12	24					36
	18	18					36
	18	24					42
	24	24					48
3 UNIT	9	9	9				27
	9	9	12				30
	9	12	12				33
	12	12	12				36
	9	9	18				36
	9	12	18				39
	12	12	18				42
	9	9	24				42
	9	12	24				45
	9	18	18				45
	12	12	24				48
	12	18	18				48
	9	18	24				51
	18	18	18				54
	12	18	24				54
	9	24	24				57
4 UNIT	9	9	9	9			36
	9	9	9	12			39
	9	9	12	12			42
	9	12	12	12			45
	9	9	9	18			45
	12	12	12	12			48
	9	9	12	18			48
	9	12	12	18			51
	9	9	9	24			51
	12	12	12	18			54
	9	9	12	24			54
	9	9	18	18			54
	9	12	12	24			57
	9	12	18	18			57
5 UNIT	9	9	9	9	9		45
	9	9	9	9	12		48
	9	9	9	12	12		51
	9	9	12	12	12		54
	9	9	9	9	18		54
	9	12	12	12	12		57
	9	9	9	12	18		57
	9	9	9	9	24		60
6 UNIT	9	9	9	9	9	9	54
	9	9	9	9	9	12	57
	9	9	9	9	12	12	60