website http://www.lgservice.com

LG

MULTI V™ System
Heat Pump Indoor Unit
INSTALLATION MANUAL

MODELS: LRNN, LRNV-BE/BG/BH Series
Type: Ceiling Concealed Duct - High Static

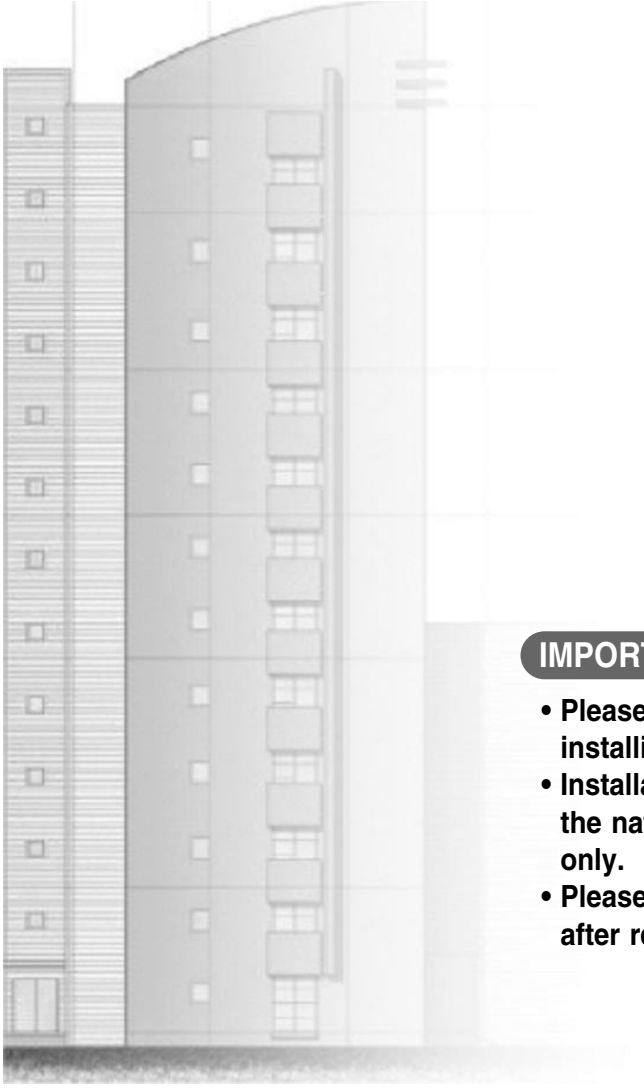

IMPORTANT

- **Please read this installation manual completely before installing the product.**
- **Installation work must be performed in accordance with the national wiring standards by authorized personnel only.**
- **Please retain this installation manual for future reference after reading it thoroughly.**

TABLE OF CONTENTS

Installation Requirements	Required Parts	Required Tools
Installation Parts Provided....3		
Safety Precautions.....4		
Installation	❑ Installation guide map ❑ Four type "A" screws & plastic anchors ❑ Connecting cable	❑ Level gauge ❑ Screw driver ❑ Electric drill ❑ Hole core drill ❑ Horizontal meter
Selection the best location 7		
Ceiling opening dimension and hanging bolt location 8	❑ Pipes: Gas side Liquid side (Refer to Product Data)	❑ Flaring tool set ❑ Specified torque wrenches (different depending on model No.)
Wiring Connection 9	❑ Insulation materials ❑ Additional drain pipe	❑ Spanner .....Half union
Check the Drainage.....10		❑ A glass of water ❑ Screw driver
Installation of Remote Control.....13		
Drain Pipe Work.....14		❑ Hexagonal wrench ❑ Gas-leak detector
Installation of Drain Pump...16		❑ Vacuum pump ❑ Gauge manifold
Optional Operation 18		
	❑ Two type "B" screws	❑ Owner's manual ❑ Thermometer

Installation

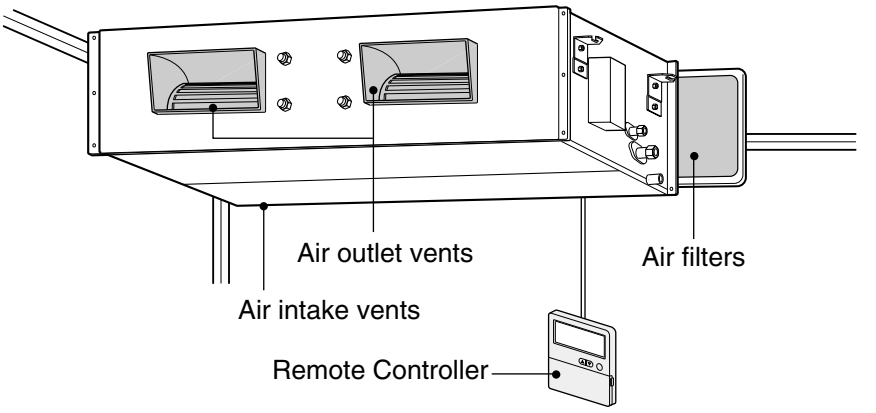

Name	Clamp metal	Drain hose	Insulation for fitting	Clamp	Screws for duct flanges	(Other)
Quantity	1 EA	1 EA	1 set	6 EA	1 set	• Owner's manual • Installation manual • Washers(8 pcs.)
Shape		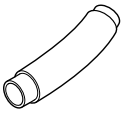	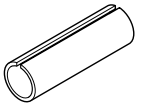 for gas pipe 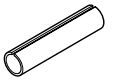 for liquid pipe	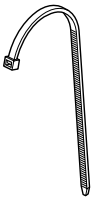	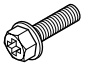	

Safety Precautions

To prevent injury to the user or other people and property damage, the following instructions must be followed.

- Be sure to read before installing the air conditioner.
- Be sure to observe the cautions specified here as they include important items related to safety.
- Incorrect operation due to ignoring instruction will cause harm or damage. The seriousness is classified by the following indications.

⚠WARNING	This symbol indicates the possibility of death or serious injury.
⚠CAUTION	This symbol indicates the possibility of injury or damage to properties only.

- Meanings of symbols used in this manual are as shown below.

⃠	**Be sure not to do.**
❗	**Be sure to follow the instruction.**

⚠WARNING

■ Installation

Do not use a defective or under-rated circuit breaker. Use this appliance on a dedicated circuit.

- There is risk of fire or electric shock.

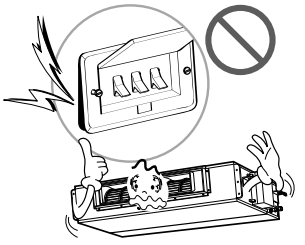

For electrical work, contact the dealer, seller, a qualified electrician, or an Authorized Service Center.

- Do not disassemble or repair the product. There is risk of fire or electric shock.

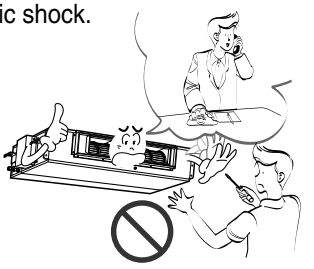

Always ground the product.

- There is risk of fire or electric shock.

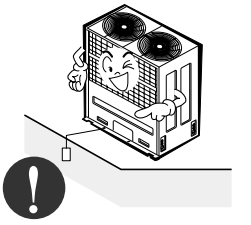

Install the panel and the cover of control box securely.

- There is risk of fire or electric shock.

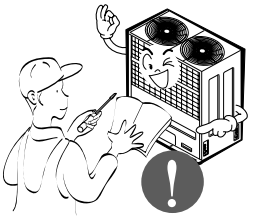

Always install a dedicated circuit and breaker.

- Improper wiring or installation may cause fire or electric shock

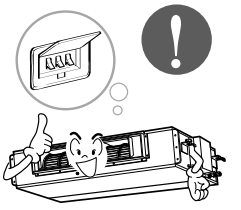

Use the correctly rated breaker or fuse.

- There is risk of fire or electric shock.

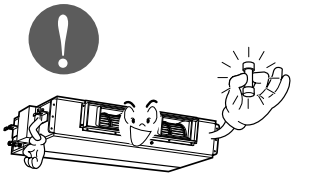

Do not modify or extend the power cable.

- There is risk of fire or electric shock.

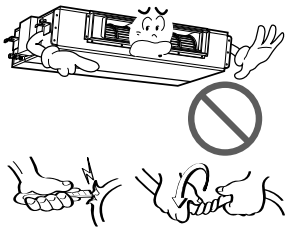

Do not let the air conditioner run for a long time when the humidity is very high and a door or a window is left open.

- Moisture may condense and wet or damage furniture.

Be cautious when unpacking and installing the product.

- Sharp edges could cause injury. Be especially careful of the case edges and the fins on the condenser and evaporator.

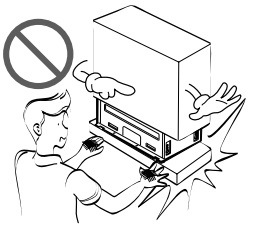

For installation, always contact the dealer or an Authorized Service Center.

- There is risk of fire, electric shock, explosion, or injury.

Do not install the product on a defective installation stand.

- It may cause injury, accident, or damage to the product.

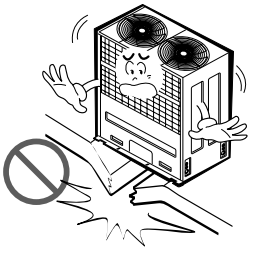

Be sure the installation area does not deteriorate with age.

- If the base collapses, the air conditioner could fall with it, causing property damage, product failure, and personal injury.

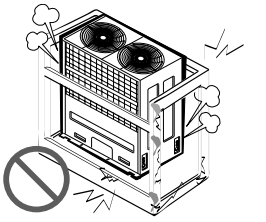

■ Operation

Do not store or use flammable gas or combustibles near the product.

- There is risk of fire or failure of product.

⚠ CAUTION

■ Installation

Always check for gas (refrigerant) leakage after installation or repair of product.

- Low refrigerant levels may cause failure of product.

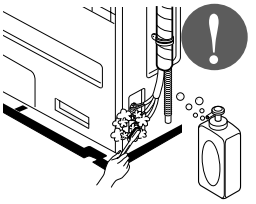

Install the drain hose to ensure that water is drained away properly.

- A bad connection may cause water leakage.

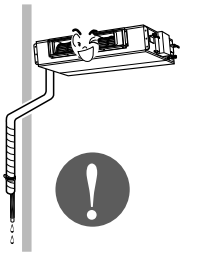

Keep level even when installing the product.

- To avoid vibration or water leakage.

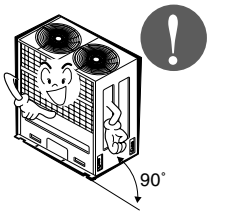

Do not install the product where the noise or hot air from the outdoor unit could damage the neighborhoods.

- It may cause a problem for your neighbors.

Use two or more people to lift and transport the product.

- Avoid personal injury.

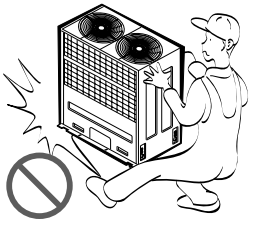

Do not install the product where it will be exposed to sea wind (salt spray) directly.

- It may cause corrosion on the product. Corrosion, particularly on the condenser and evaporator fins, could cause product malfunction or inefficient operation.

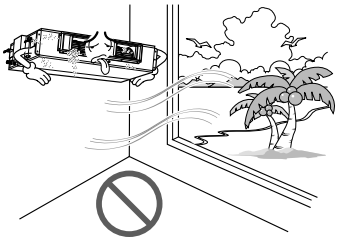

Installation

Read completely, then follow step by step.

Selection of the best location

Install the air conditioner in the location that satisfies the following conditions.

- The place shall easily bear a load exceeding four times the indoor unit's weight.
- The place shall be able to inspect the unit as the figure.
- The place where the unit shall be leveled.
- The place shall allow easy water drainage.(Suitable dimension "H" is necessary to get a slope to drain as figure.)
- The place shall easily connect with the outdoor unit.
- The place where the unit is not affected by an electrical noise.
- The place where air circulation in the room will be good .
- There should not be any heat source or steam near the unit.

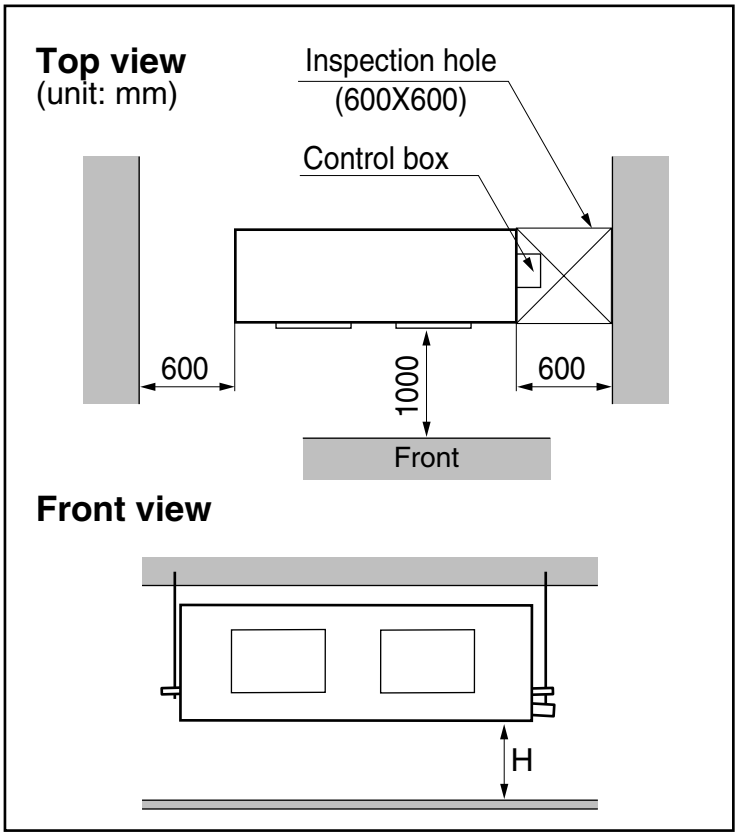

CAUTION : In case that the unit is installed near the sea, the installation parts may be corroded by salt, The installation parts (and the unit) should be taken appropriate anti-corrosion measures.

Ceiling dimension and hanging bolt location

■ **Installation of Unit**

Install the unit above the ceiling correctly.

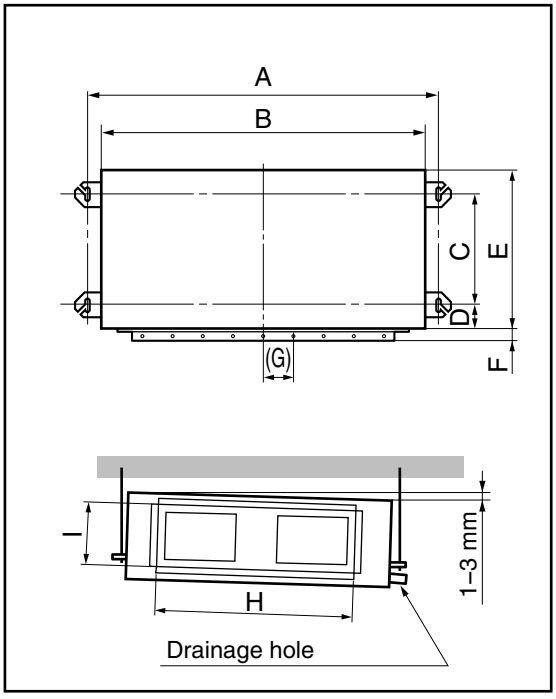

CASE 1

POSITION OF SUSPENSION BOLT

- Apply a joint-canvas between the unit and duct to absorb unnecessary vibration.

(Unit:mm)

Dimension / Capacity [kW(Btu/h)]	A	B	C	D	E	F	(G)	H
186/246BH	932	882	355	45.5	450	30	87	750
286/366/426BG	1232	1182	355	45.5	450	30	87	830
426/486BE	1292	1230	570.5	54	680	30	120	1006

CASE 2

- Install the unit leaning to a drainage hole side as a figure for easy water drainage.

POSITION OF CONSOLE BOLT

- A place where the unit will be leveled and that can support the weight of the unit.
- A place where the unit can withstand its vibration.
- A place where service can be easily performed.

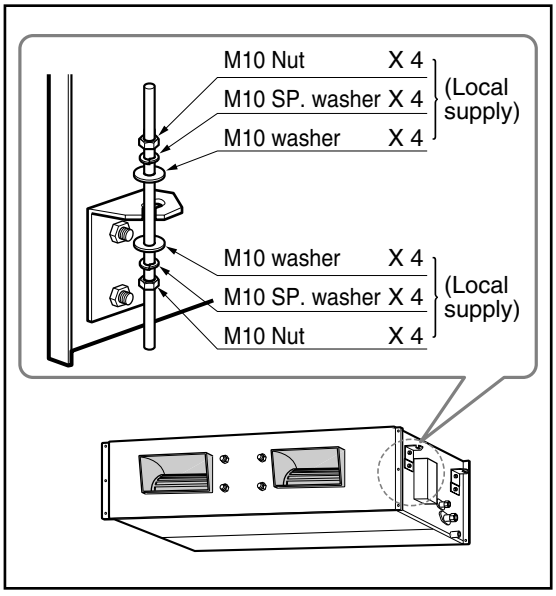

NOTICE

- Throughly study the following installation locations:

1. In such places as restaurants and kitchens, considerable amount of oil steam and flour adhere to the fan, the fin of the heat exchanger, resulting in heat exchange reduction, spraying, dispersing of water drops, etc.
   In these cases, take the following actions:
   - Make sure that the ventilation fan for smoke-collecting hood on a cooking table has sufficient capacity so that it draws oily steam which should not flow into the suction of the air conditioner.
   - Make enough distance from a cooking room to install the air conditioner in such a place where it may not suck in oil steam.
2. Avoid installing air conditioner in such circumstances where cutting oil mist or iron powder is in suspension in factories, etc.
3. Avoid places where inflammable gas is generated, flows in, is stored or vented.
4. Avoid places where sulfurous acid gas or corrosive gas is generated.
5. Avoid places near high frequency generators.

- Select and mark the position for fixing bolts.
- Drill the hole for set anchor on the face of ceiling.

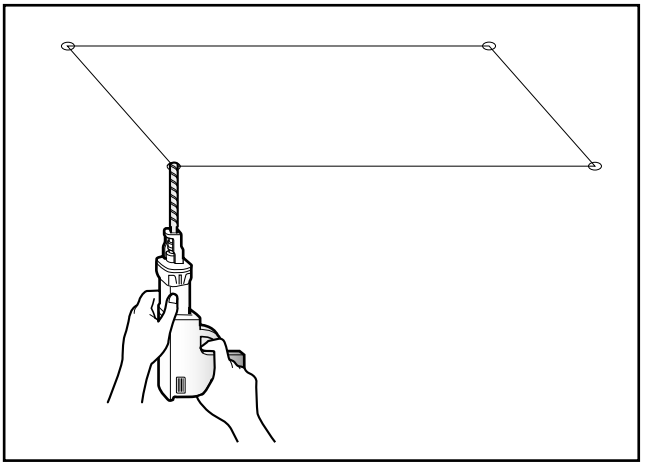

CAUTION : Tighten the nut and bolt to prevent unit falling.

- Insert the set anchor and washer onto the suspension bolts for locking the suspension bolts on the ceiling.
- Mount the suspension bolts to the set anchor firmly.
- Secure the installation plates onto the suspension bolts (adjust level roughly) using nuts, washers and spring washers.

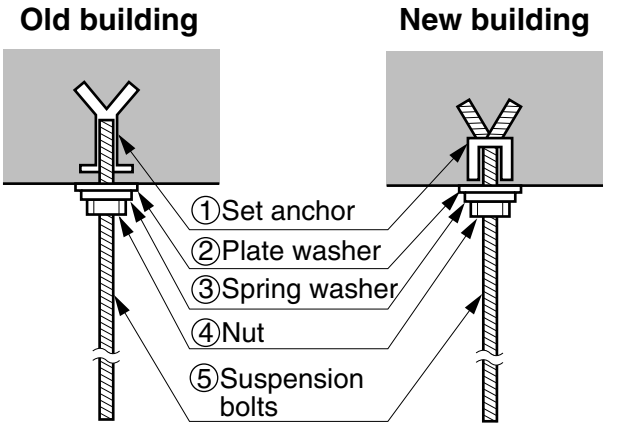

Wiring Connection

Connect the wires to the terminals on the control board individually according to the outdoor unit connection.

- Ensure that the color of the wires of outdoor unit and the terminal No. are the same as those of indoor unit respectively

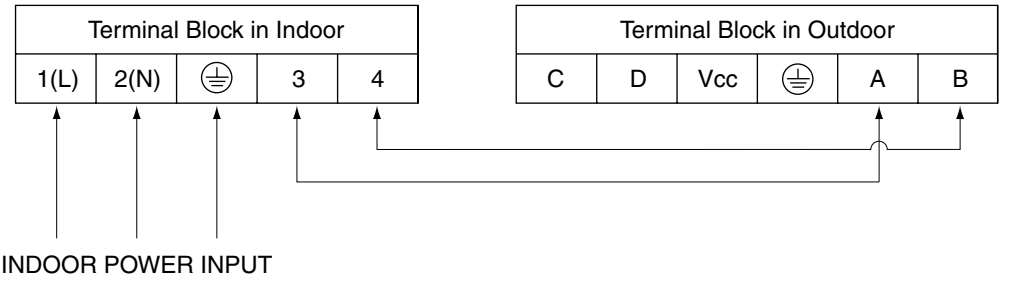

WARNING : Make sure that the screws of the terminal are free from looseness.

Clamping of cables

1) Arrange 2 power cables on the control panel.
2) First, fasten the steel clamp with a screw to the inner boss of control panel.
3) For the cooling model, fix the other side of the clamp with a screw strongly. For the heat pump model, put the 0.75mm^2 cable(thinner cable) on the clamp and tighten it with a plastic clamp to the other boss of the control panel.
4) In Australia, the length of power supply cord measured from the entry of the power supply cord to the middle of live pin on the power plug should be over 1.8m.

THERMAL INSULATION All thermal insulation must comply with local requirement.

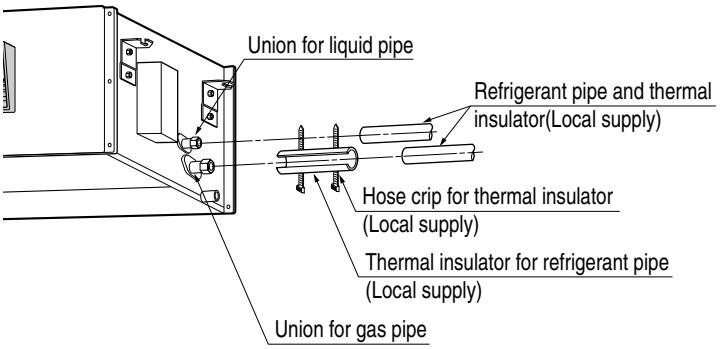

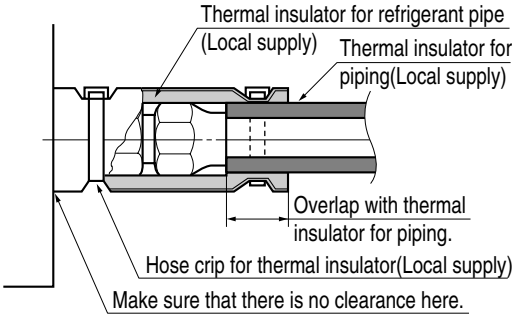

Checking the Drainage

1. Remove the Air Filter.

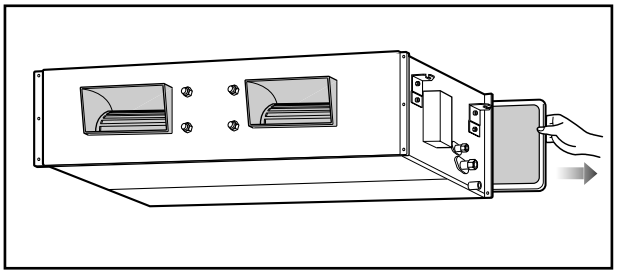

2. Check the drainage.

- Spray one or two glasses of water upon the evaporator.
- Ensure that water flows drain hose of indoor unit without any leakage.

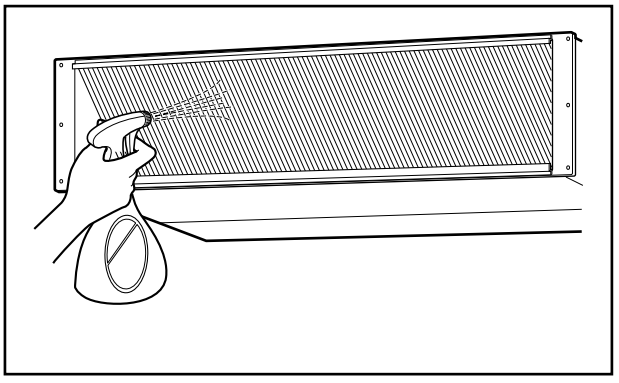

CAUTION

1. **Install declination** of the indoor unit is very **important for the drain** of the duct type air conditioner.
2. Minimum thickness of the insulation for the connecting pipe shall be 5mm.

Front of view

- The unit must be horizontal or declined to the drain hose connected when finished installation.

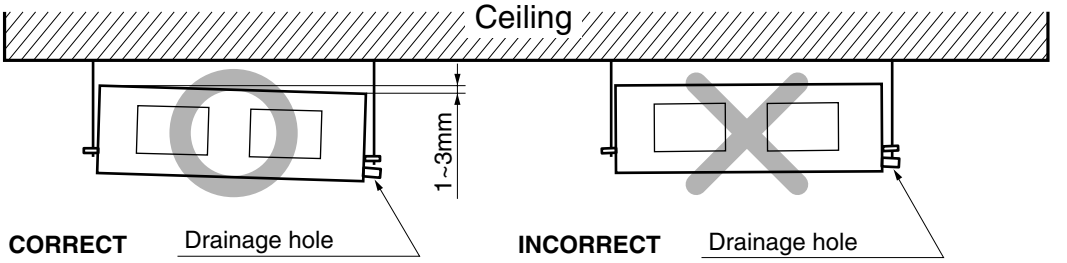

CAUTION FOR GRADIENT OF UNIT AND DRAIN PIPING

Lay the drain hose with a downware inclination so water will drain out.

- Alway lay the drain with downward inclination (1/50 to 1/100).
  Prevent any upward flow or reverse flow in any part.
- 5mm or thicker formed thermal insulator shall always be provided for the drain pipe.

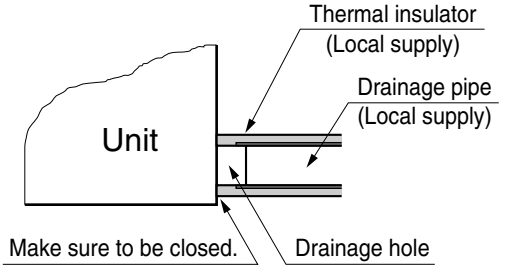

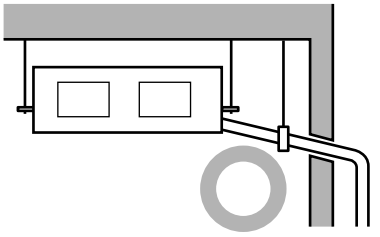

CORRECT

- Install the P-Trap (or U-Trap) to prevent a water leakage caused by the blocking of intake air filter.

- Upward routing not allowed

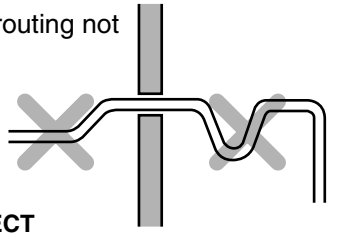

INCORRECT

Applied U-Trap Dimension

A ≥ 70mm
B ≥ 2C
C ≥ 2 x SP
SP = External Pressure (mmAq)
Ex) External Pressure = 10mmAq
A ≥ 70mm
B ≥ 40mm
C ≥ 20mm

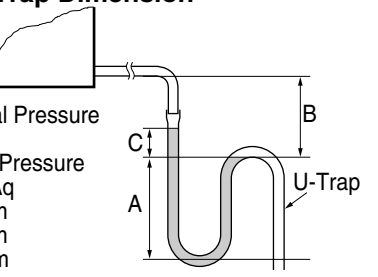

CAUTION:

After the confirmation of the above conditions, prepare the wiring as follows:

1) Never fail to have an individual power specialized for the air conditioner. As for the method of wiring, be guided by the circuit diagram pasted on the inside of control box cover.
2) Provide a circuit breaker switch between power source and the unit.
3) The screw which fasten the wiring in the casing of electrical fittings are liable to come loose from vibrations to which the unit is subjected during the course of transportation. Check them and make sure that they are all tightly fastened. (If they are loose, it could give rise to burn-out of the wires.)
4) Specification of power source
5) Confirm that electrical capacity is sufficient.
6) Be sure that the starting voltage is maintained at more than 90 percent of the rated voltage marked on the name plate.
7) Confirm that the cable thickness is as specified in the power sources specification. (Particularly note the relation between cable length and thickness.)
8) Never fail to equip a leakage breaker where it is wet or moist.
9) The following troubles would be caused by voltage drop-down.
   - Vibration of a magnetic switch, damage on the contact point there of, fuse breaking, disturbance to the normal function of a overload protection device.
   - Proper starting power is not given to the compressor.

HAND OVER

Teach the customer the operation and maintenance procedures, using the operation manual.
(air filter cleaning, temperature control, etc.)

Installation of Remote Control

- Although the room themperature sensor is in the indoor unit, the remote control should be installed in such places away from direct sunlight and high humidity.

Installation of the remote control

- Select places that are not splashed with water.
- Select control position after receiving customer approval.
- The room temperature sensor is built in the indoor unit.
- This remote control equipped with liquid crystal display. If this position is higher or lower, display is difficult to see.(The standard height is 1.2 ~1.5m high)

Routing of the remote control cord

- Keep the remote control cord away from the refrigerant piping and the drain piping.
- To protect the remote control cord from electrical noise, place the cord at least 5cm away from other power cables (audio equipment. television set, etc.)
- If the remote control cord is secured to the wall, provide a trap at the top of the cord to prevent water droplets from running.

CAUTION : Use the wireless remote control with the wired.
If you want to use wireless alone, you should do following process.
1) Do auto addressing in connecting the wired.
2) After compelting auto addressing, turn off the power and disconnect the wired.

WIRED REMOTE CONTROL INSTALLATION

DISASSEMBLING

- Separate the under plate from Remote control box.

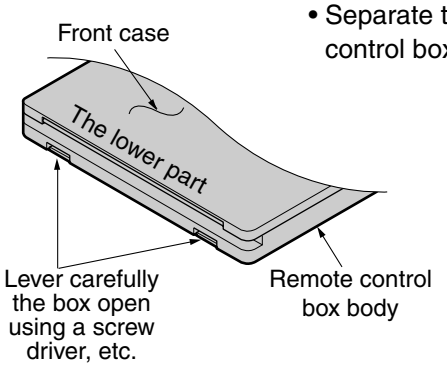

- Attach insulator to under plate.

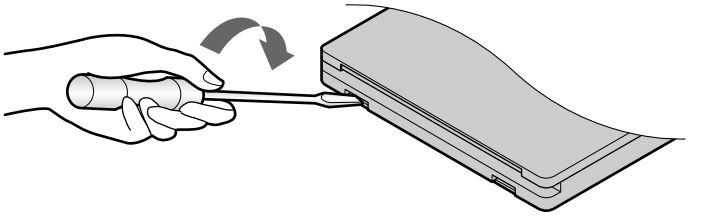

- Fix the under plate on the wall

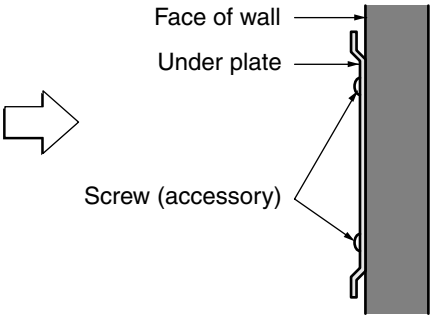

- Fix the cord clamps on the wall by ø 3 tapping screws (accessory).
- Fix the remote control cord.

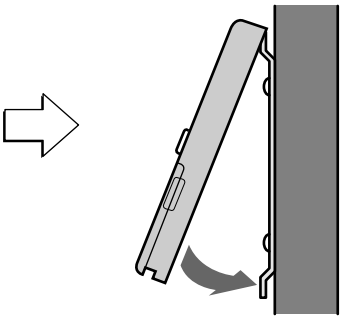

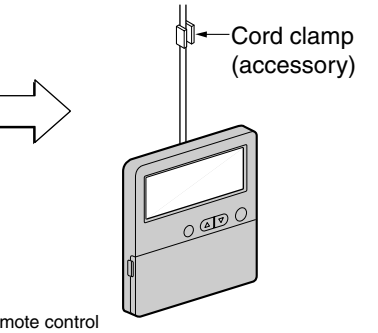

ELECTRICAL WIRING

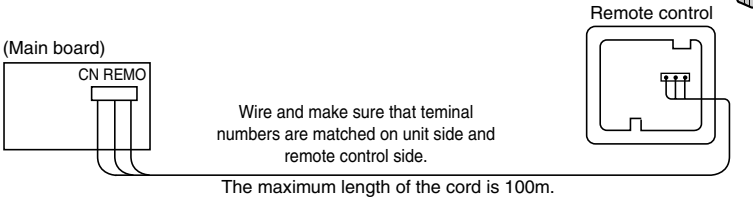

The maximum length of the cord is 100m.
If the length of the cord exceeds 50m,
use a wire size greater than 0.5mm^2.

Drain Pipe Work

1) Drain pipe gradient and support

a) - The drain pipe must be fitted at a gradient of at least 1/100.
- The drain pipe should be as short as possible and free from airlocks.

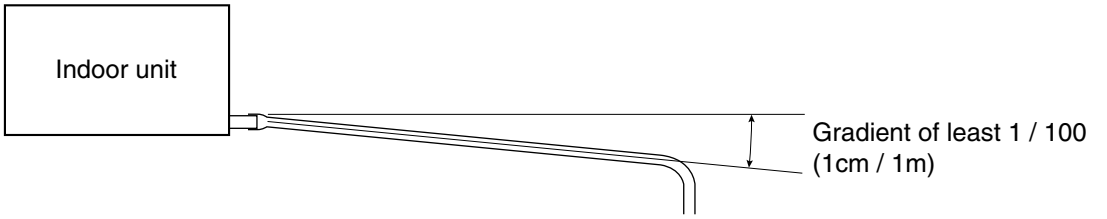

b) - Suspension bolts should be used th support long stretches of drain pipe in order to ensure that a gradient of 1/100 is maintained (PVC pipe should not be bent)

Spacing of supports for horizontal piping

Class	Norminal diameter	Spacing
Rigid PVC pipe	25~40mm	1.0m or less

c) - The length of pipe laid horizontally should be kept a minimum.

2) Drain trap

Fit any indoor unit whose drain pipe connection is subjected to negative pressure, with a drain trap.
a) Rig the drain trap shown in the drawing below.

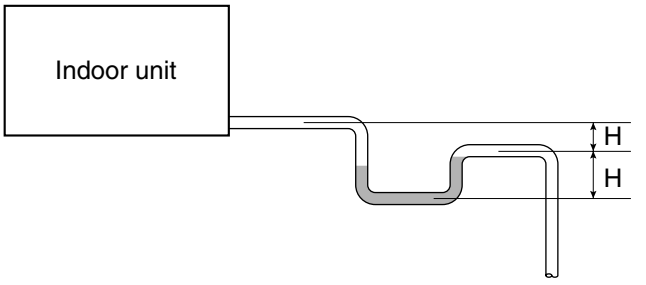

b) Provide one trap per unit. A single trap for converging units will prove ineffective.
c) Rig the trap to allow for future changing.

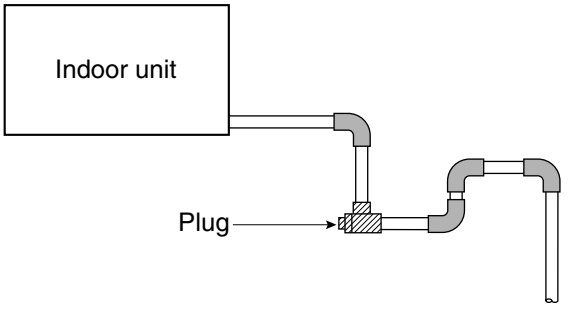

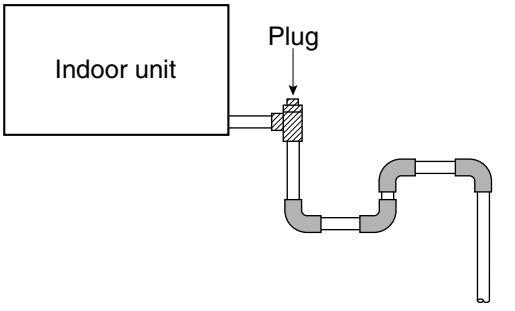

3) Ground drain piping

a) It is standard work practice to make connections to the main pipe from above. The pipe down from the combination should be as large as possible.

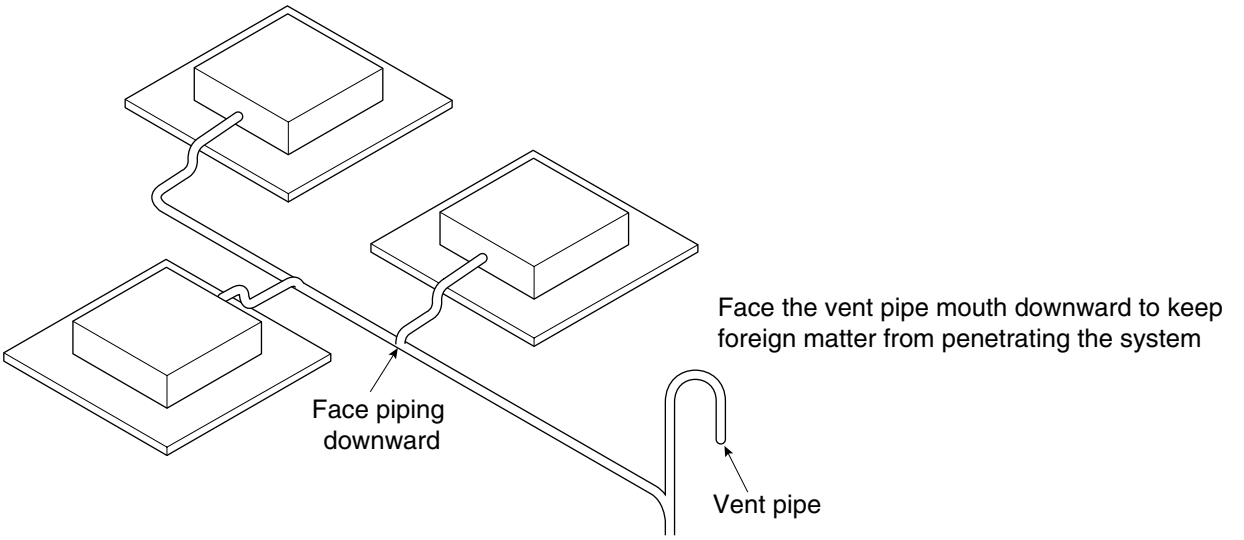

b) The pipe work should be kept as short as possible and he number of indoor units per group kept to a minimum.

4) Use of an auxiliary drain hose(flexible)

a) It the drain pan made of polystyrene foam is used then an auxiliary drain hose(flexible) is also essential a flexible drain hose permits the drain socket and drain pipe to be connected without difficulty and prevents any undue strain being placed on he drain pan.

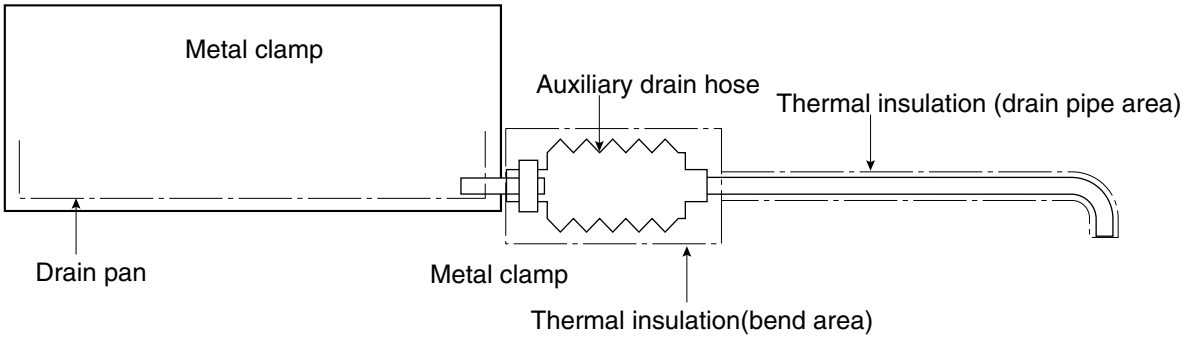

❊ Important points

- The drain pipe should be at least equal in size to that of the indoor unit.
- The drain pipe is thermally insulated to prevent the formation of condensation inside the pipe.
- The drain up mechanism should be fitted before the indoor unit is installed and when the electricity has been connected some water should be added to the drain pan and the drain pump check to see that it is functioning correctly.
- Al connections should be secure. (Special care is needed with PVC pipe)
- Insulate auxiliary drain hose with thermal insulation band.

Installation of drain pump

1) Safety First

- Cut off the power supply before installation and maintenance.
- Drain Pump Assy, Elbow and Hose must be installed at safe area where it is far away from the user.
- Drain Pump Assy must be installed at appointed location.
- All wiring and connections are for installation only.

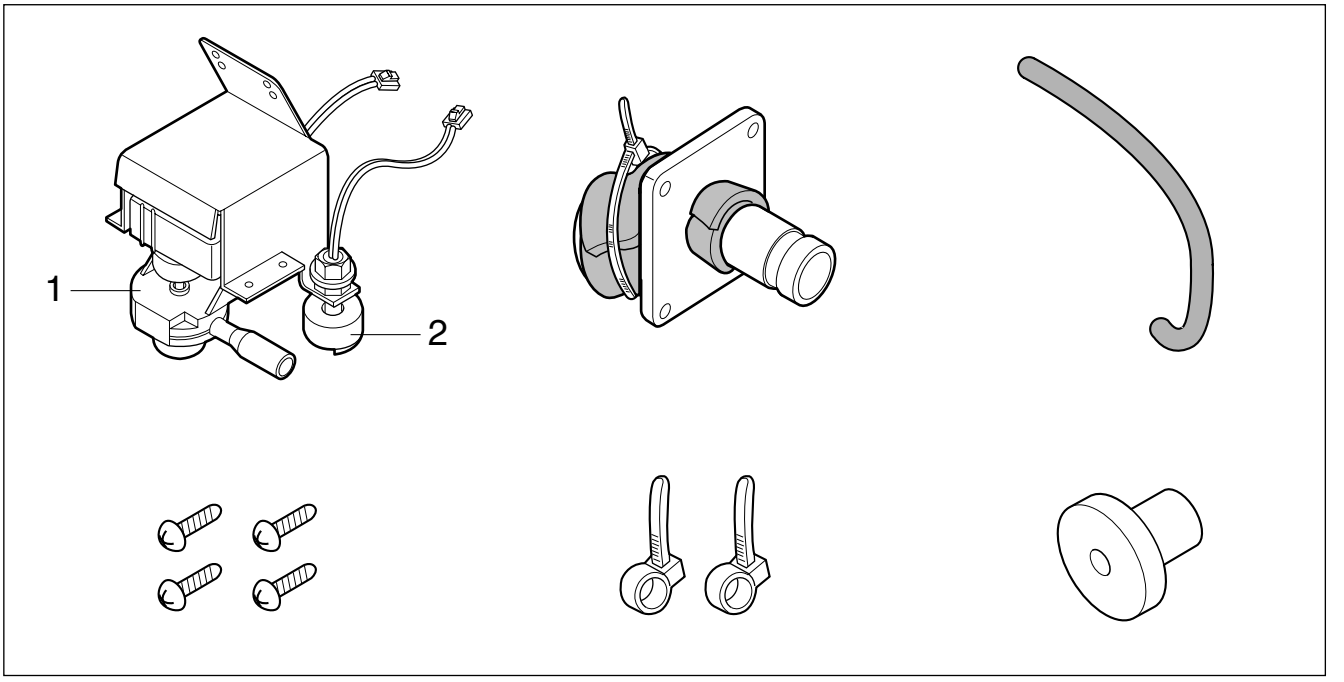

2) Quantity

Quantity	Package contents
1	Drain Pump Assy(AC220~240V, 50/60Hz, 400cm^3/min)
1	Elbow(ø32mm)
1	Hose
2	Tie Wrap
10	Screw
1	Rubber
1	Installation manual

3) Service Parts List

No.	Location No.	P/No.	Description	Remark
1	158590	5858A10001L	Pump Water	
2	266012	6601A20001E	Switch Assy, Float	

5) Attention

1. Possible drain-head height is up to 700mm. So, it must be installed below 700mm.

2. Keep the drain hose downward up to 1/50~1/100 inclination.
   Prevent any upward flow or reverse flow in any part.

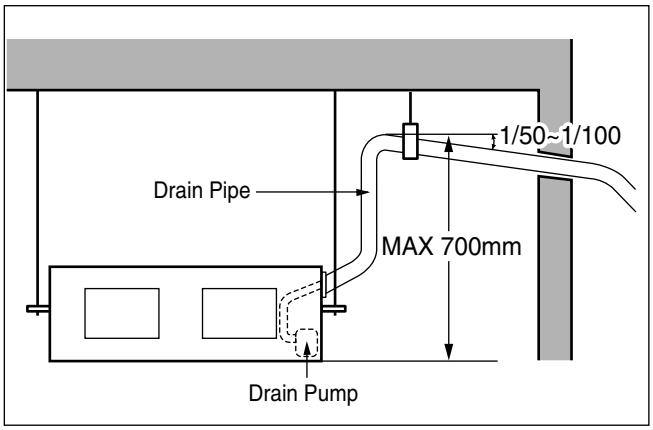

3. 5mm or thicker formed thermal insulator is provided for the drain pipe.

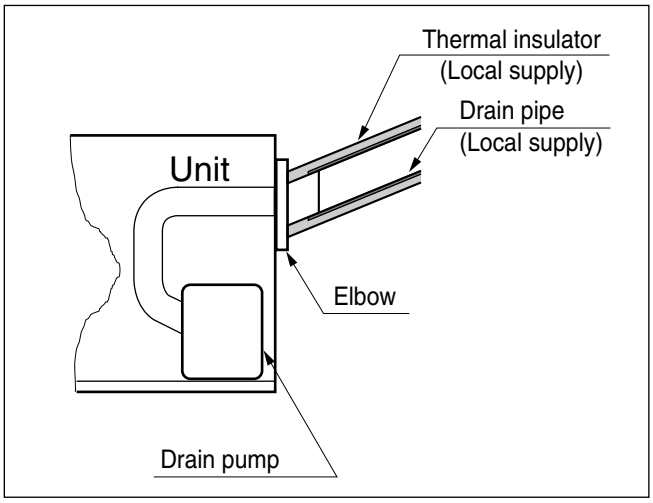

4. Upward routing is not allowed.

5. Be sure to check the drain pump for normal operation and abnormal noise when electrical wiring is complete.

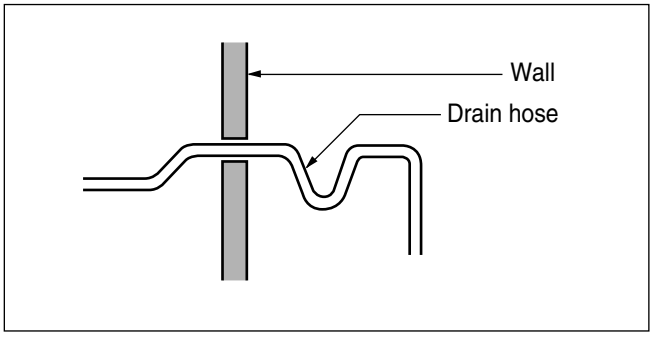

Optional operation

1) Two Thermistor System

(1) Open the rear cover of the wired remote-control to set the mode.
(2) Select one of three selectable modes as follows.
- Position 1:
  The room temperature is controlled by the thermistor of the main body.
- Position 2:
  The room themperature is controlled by the thermistor of the wired remote-control, control the temperature according to the position of wired remote-control.
- Position 3:
  The room temperature is controlled by lower temperature between the temperature of main body and of remote-control sensor.

(3) Move the slide switch to set position.
(4) Close the rear cover and check if it works normally.

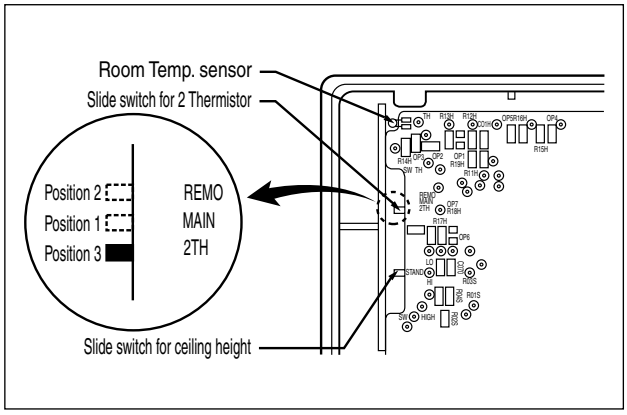

CAUTION :

- **Select the position after counselling with a customer.**
  In case of cooling mode, room temperature is controlled by the main body sensor.
- **To control the room temperature by a wired remote control, install control(room temp. sensor) to sense the temperature more accurately.**
- **Maunfactured in the position 3.**

2) Adjusting air volume to the height of ceiling

You can choose the RPM(or air volume) of indoor motor according to the height of ceiling to supply the comfortable atmosphere to consumers.

Procedure

1. Choose the selectable position in the table after measuring the height of ceiling.
2. In the case of changing the height as "high" or "low", open the rear cover of the wired remote-control.
3. Move the slide switch to the set position.
4. Close the rear cover and check if it works nomally.

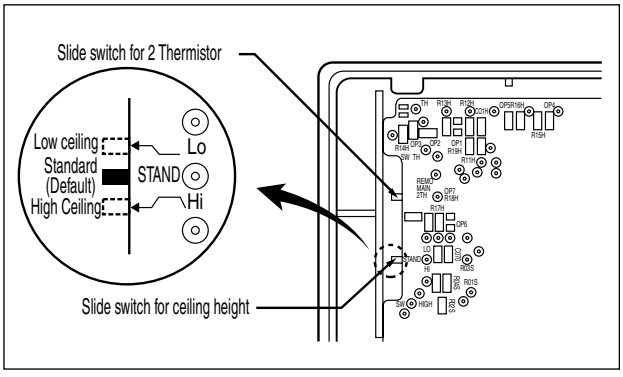

Ceiling height	Mode of slide switch	Change of air volume	Remark
more than 4.0m	High Ceiling	Increasing	Maunfactured in standard mode
3.2~4.0m	Standard	-	
less than 3.2m	Low Ceiling	Decreasing	

P/No.: 3828A23004B

Printed in Korea

After reading this manual, keep it in a place easily accessible to the user for future reference.