website http://www.lgservice.com
e-mail http://www.lgeservice.com/techsup.html

LG

LG Ceiling Duct-Type Air Conditioner

INSTALLATION MANUAL

IMPORTANT

- **Please read this installation manual completely before installing the product.**
- **Installation work must be performed in accordance with the national wiring standards by authorized personnel only.**
- **Please retain this installation manual for future reference after reading it thoroughly.**

TABLE OF CONTENTS

Installation Requirements	Required Parts	Required Tools
Safety precautions 3		
Installation of Indoor, Outdoor unit.....6	• Four Type “A” screws • Connecting cable	• Level • Screw driver • Electric drill
Connecting Pipes to the Indoor Unit 15	• Pipes: Gas side .....1/2", 5/8", 3/4" Liquid side .....1/4", 3/8", 1/2" • Insulated drain hose • Insulation materials	• Hole core drill (ø70mm) • Flaring Tools set
Connecting Pipes to the Outdoor Unit 17	• Additional Drain hose (Inner Dia.....25mm)	
Checking the Drainage 17		
Connecting Cables between Indoor Unit and Outdoor Unit 18		• Screw driver
Air Purging of the Connecting Pipes and the Indoor Unit 21		• Hexagonal Wrench (4mm/5mm) • Gas-leak Detector
Group Control.....22		
Two Thermistor System.... 22		
E.S.P (External Static Pressure) Setting.....23		
How to set E.S.P?. 24		

Safety Precautions

To prevent injury to the user or other people and property damage, the following instructions must be followed.

■ Incorrect operation due to ignoring instruction will cause harm or damage. The seriousness is classified by the following indications.

⚠WARNING	This symbol indicates the possibility of death or serious injury.
⚠CAUTION	This symbol indicates the possibility of injury or damage.

■ Meanings of symbols used in this manual are as shown below.

⃠	**Be sure not to do.**
❗	**Be sure to follow the instruction.**

⚠WARNING

■ Installation

Do not use a defective or underrated circuit breaker. Use this appliance on a dedicated circuit.

• There is risk of fire or electric shock.

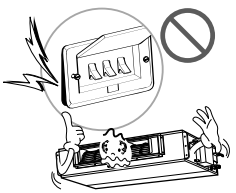

For electrical work, contact the dealer, seller, a qualified electrician, or an Authorized Service Center.

• Do not disassemble or repair the product. There is risk of fire or electric shock.

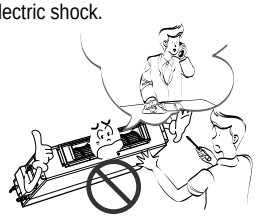

Always ground the product.

• There is risk of fire or electric shock.

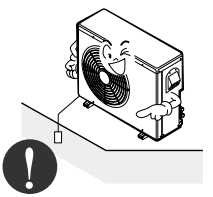

Install the panel and the cover of control box securely.

• There is risk of fire or electric shock.

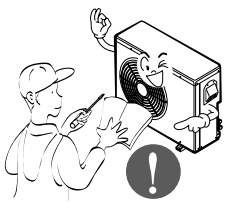

Always install a dedicated circuit and breaker.

• Improper wiring or installation may cause fire or electric shock



Use the correctly rated breaker or fuse.

• There is risk of fire or electric shock.

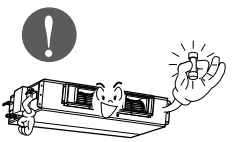

Do not modify or extend the power cable.

• There is risk of fire or electric shock.

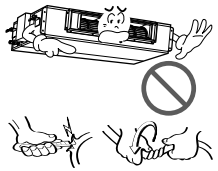

Be cautious when unpacking and installing the product.

• Sharp edges could cause injury. Be especially careful of the case edges and the fins on the condenser and evaporator.

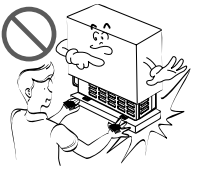

For installation, always contact the dealer or an Authorized Service Center.

• There is risk of fire, electric shock, explosion, or injury.

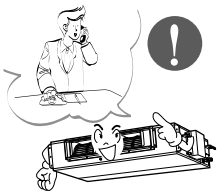

Do not install the product on a defective installation stand.

• It may cause injury, accident, or damage to the product.



Be sure the installation area does not deteriorate with age.

• If the base collapses, the air conditioner could fall with it, causing property damage, product failure, and personal injury.

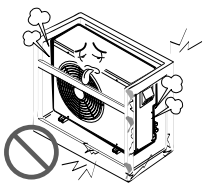

Do not let the air conditioner run for a long time when the humidity is very high and a door or a window is left open.

• Moisture may condense and wet or damage furniture.



■ Operation

Do not store or use flammable gas or combustibles near the product.

• There is risk of fire or failure of product.



⚠CAUTION

■ Installation

Always check for gas (refrigerant) leakage after installation or repair of product.

• Low refrigerant levels may cause failure of product.

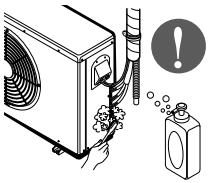

Install the drain hose to ensure that water is drained away properly.

• A bad connection may cause water leakage.

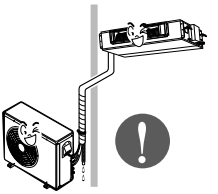

Keep level even when installing the product.

• To avoid vibration or water leakage.

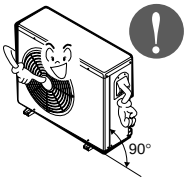

Do not install the product where the noise or hot air from the outdoor unit could damage the neighborhoods.

• It may cause a problem for your neighbors.



Use two or more people to lift and transport the product.

• Avoid personal injury.



Do not install the product where it will be exposed to sea wind (salt spray) directly.

• It may cause corrosion on the product. Corrosion, particularly on the condenser and evaporator fins, could cause product malfunction or inefficient operation.

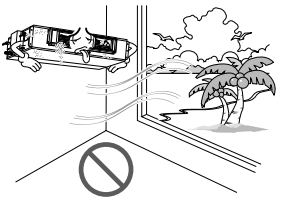

Installation of Indoor, Outdoor Unit

1. Selection of the best location

1) Indoor unit

Select location

Install the air conditioner in the location that satisfies the following conditions.

- The place shall easily bear a load exceeding four times the indoor unit's weight.
- The place shall be able to inspect the unit as the figure.
- The place where the unit shall be leveled.
- The place shall allow easy water drainage.(Suitable dimension "H" is necessary to get a slope to drain as figure.)
- The place shall easily connect with the outdoor unit.
- The place where the unit is not affected by an electrical noise.
- The place where air circulation in the room will be good .
- There should not be any heat source or steam near the unit

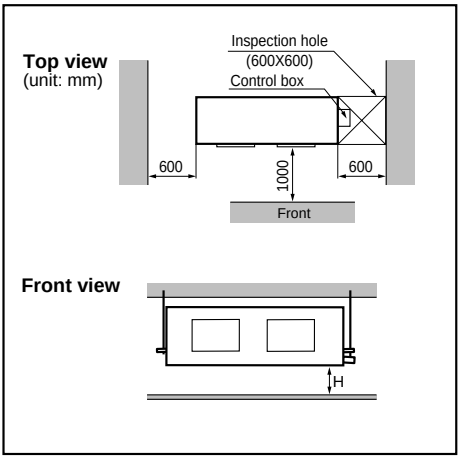

2) Outdoor unit

- If an awning is built over the unit to prevent direct sunlight or rain exposure, be careful that heat radiation from the condenser is not restricted.
- There should not be any animals or plants which could be affected by hot air discharged.
- Ensure the spaces indicated by arrows from the wall, ceiling, fence or other obstacles.

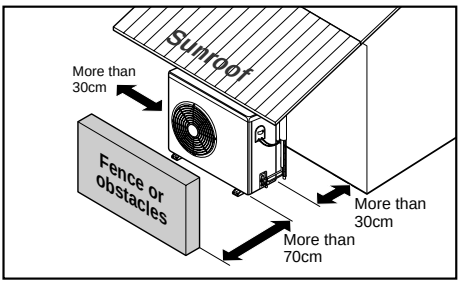

3) Piping length and the elevation

Capacity	Pipe Size (Diameter:Ø)		Length A(m)		Elevation B(m)		*Additional refrigerant(g/m)
	Gas	Liquid	Standard	Max.	Standard	Max.	
18K Btu/h	5/8"(15.88mm)	1/4"(6.35mm)	7.5	50	5	30	30
24K Btu/h	1/2"(12.7mm)	1/4"(6.35mm)	7.5	50	5	30	35

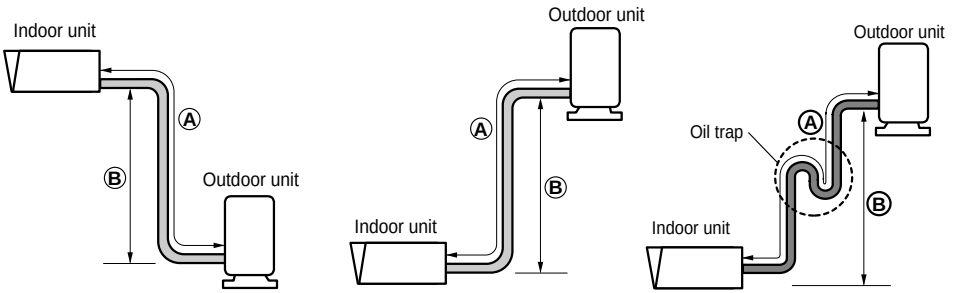

CAUTION:

- **Rated performance for refrigerant line length of:7.5m**
- **Capacity is based on standard length and maximum allowance length is on the basis of reliability.**
- **Improper refrigerant charge may result in abnormal cycle.**
- **Oil trap should be installed every 10 meters.**

2. Indoor unit installation

■ **Installation of Unit**

Install the unit above the ceiling correctly.

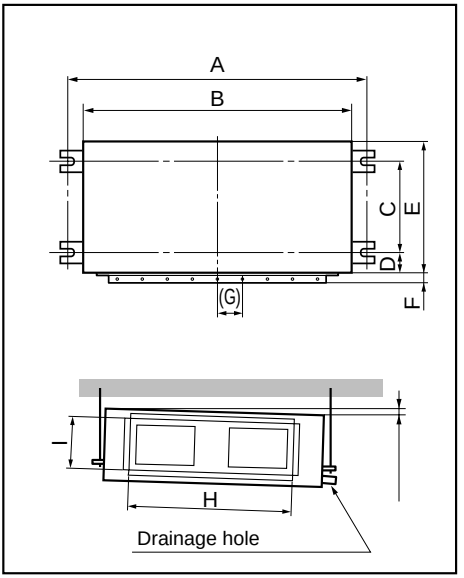

CASE 1

POSITION OF SUSPENSION BOLT

- Apply a joint-canvas between the unit and duct to absorb unnecessary vibration.
- Apply a filter Accessory at air return hole.

(Unit:mm)

Dimension / Capacity	A	B	C	D	E	F	(G)	H	I
18K/24K BTU/h	932	880	355	45.5	450	30	87	750	163

CASE 2

- Install the unit leaning to a drainage hole side as a figure for easy water drainage.

POSITION OF CONSOLE BOLT

- A place where the unit will be leveled and that can support the weight of the unit.
- A place where the unit can withstand its vibration.
- A place where service can be easily performed.

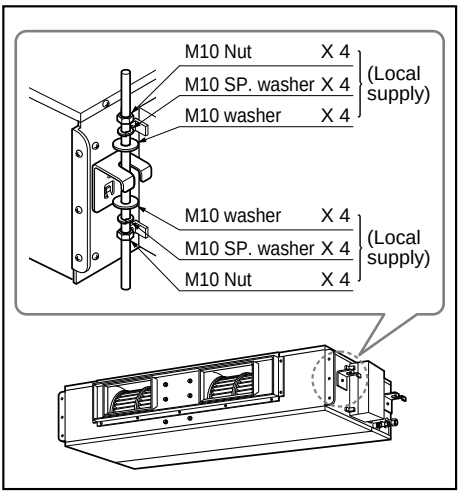

- Select and mark the position for fixing bolts.
- Drill the hole for set anchor on the face of ceiling.

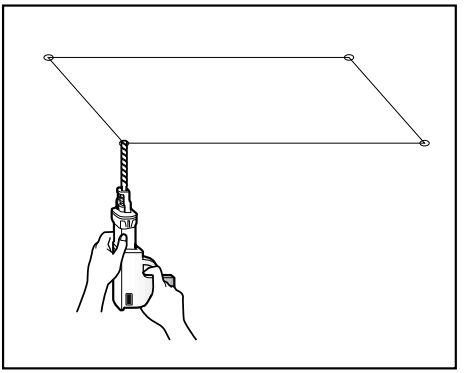

- Insert the set anchor and washer onto the suspension bolts for locking the suspension bolts on the ceiling.
- Mount the suspension bolts to the set anchor firmly.
- Secure the installation plates onto the suspension bolts (adjust level roughly) using nuts, washers and spring washers.

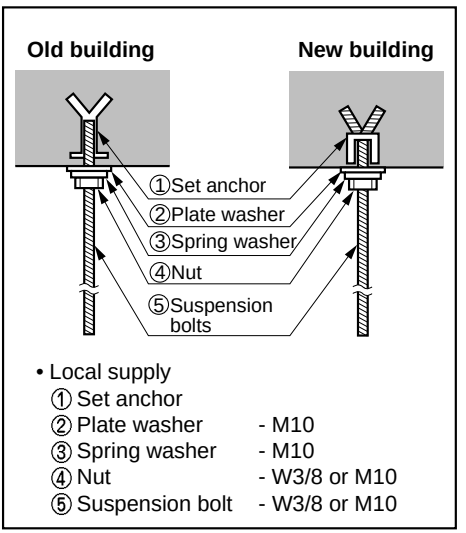

- Local supply
  - ① Set anchor
  - ② Plate washer - M10
  - ③ Spring washer - M10
  - ④ Nut - W3/8 or M10
  - ⑤ Suspension bolt - W3/8 or M10

⚠ CAUTION

Tighten the nut and bolt to prevent unit falling

⚠ CAUTION

1. **Install declination** of the indoor unit is very **important for the drain** of the duct type air conditioner.
2. Minimum thickness of the insulation for the connecting pipe shall be 5mm.

Front of view

• The unit must be horizontal or declined to the drain hose connected when finished installation.

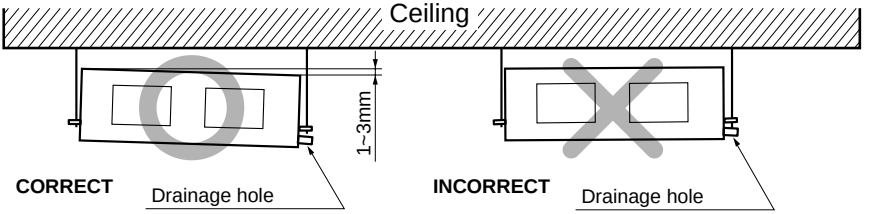

CAUTION FOR GRADIENT OF UNIT AND DRAIN PIPING

Lay the drain hose with a downward inclination so water will drain out.

• Always lay the drain with downward inclination (1/50 to 1/100).
Prevent any upward flow or reverse flow in any part.
• 5mm or thicker formed thermal insulator shall always be provided for the drain pipe.

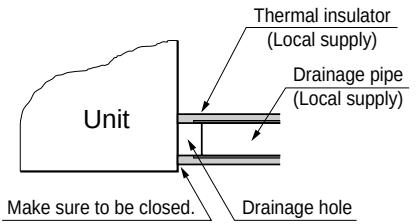

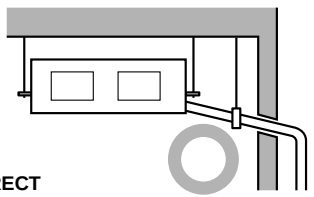

• Upward routing not allowed

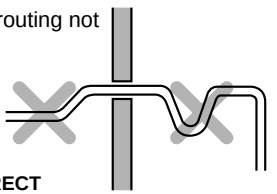

• Install the P-Trap (or U-Trap) to prevent a water leakage caused by the blocking of intake air filter.

Applied U-Trap Dimension

A 70mm
B 2C
C 2 x SP
SP = External Pressure (mmAq)
Ex) External Pressure = 10mmAq
A 70mm
B 40mm
C 20mm

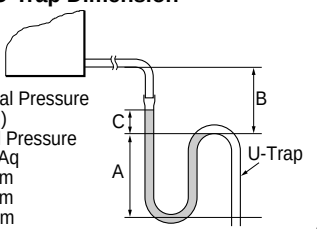

- Drill the piping hole with 70mm dia, hole core drill.
- Piping hole should be slightly slant to the outdoor side.

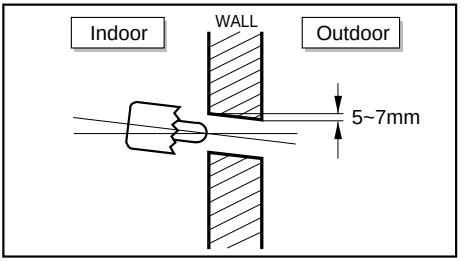

INSULATION, OTHERS

Insulate the joint and tubes completely.

THERMAL INSULATION All thermal insulation must comply with local requirement.

INDOOR UNIT

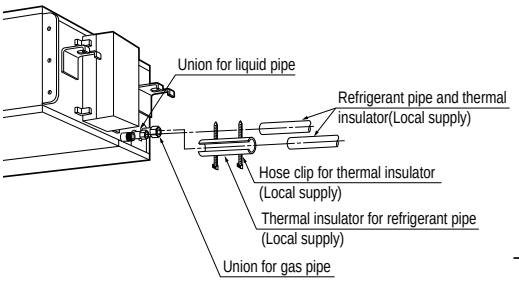

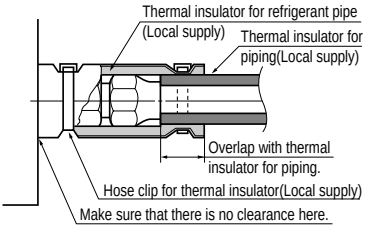

REFRIGERANT PIPE

- Insulate and tape both the gas piping and liquid piping.

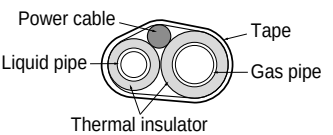

TEST AND CHECK

■ *After all workings are finished, check the working and operation.*

- Air distribution ——— Is the air circulation good?
- Drain ——— Is the drainage smoothly and no sweating?
- Gas leakage ——— Is the piping connection correctly?
- Wiring ——— Is the wiring connection correctly?
- Lock-bolt ——— Is the lock-bolt of compressor loosened?

INSTALLATION OF REMOTE CONTROL BOX

Install the remote control box and cord correctly.

POINT OF REMOTE CONTROLLER INSTALLATION

• Although the room temperature sensor is in the indoor unit, the remote control box should be installed in such places away from direct sunlight and high humidity.

INSTALLATION OF THE REMOTE CONTROL BOX

- Select places that is not splashed by water.
- Select control position after receiving customer approval.
- The room temperature sensor of the thermostat for temperature control is built in the indoor unit.
- This remote controller equipped with liquid crystal display. If this position is higher or lower, display is difficult to see. (The standard height is 1.2~1.5m high)

ROUTING OF THE REMOTE CONTROL CORD

- Keep the remote control cord away from the refrigerant piping and the drain piping.
- To protect the remote control cord from electrical noise, place the cord at least 5cm away from other power cables. (Audio equipment, Television set, etc)
- If the remote control cord is secured to a wall, provide a trap at the top of the cord to prevent water droplets from running.

ELECTRICAL WIRING TO THE INDOOR UNIT

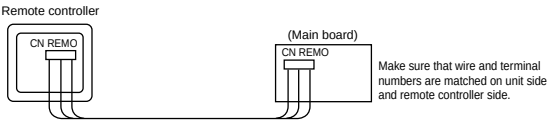

DISASSEMBLING OF THE REMOTE CONTROLLER

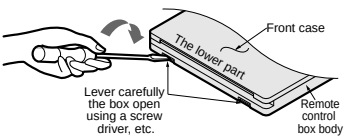

WHEN THE REMOTE CONTROL BOX IS INSTALLED WITH THE CORD BURIED.

PROCEDURE OF INSTALLATION

1. Fix the under plate on the switch box by screws(Local supply). In this case, fit the under plate on the wall, and be careful of deformation.
2. Receive the remote control cord in the switch box.
3. Hook the remote control unit on the under plate.

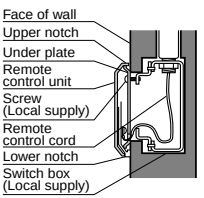

WHEN THE REMOTE CONTROL BOX IS INSTALLED WITH THE CORD EXPOSED.

PROCEDURE OF INSTALLATION

1. Fix the under plate on the wall by self tapping screws (accessory).
2. Make a slit (Part A) at the top side of the remote control box by nipper.
3. Rout the cord as shown in the following figure. In this case, push the cord into the around of case(Part B).
4. Hook the remote control unit on the under plate.

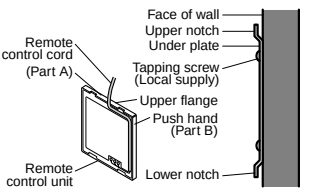

FIXING OF REMOTE CONTROL CORD

1. Fix the cord clamps on the wall by ø3 tapping screws(Local supply).
2. Fix the remote control cord.

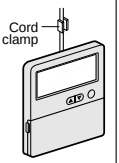

REFRIGERANT PIPING

Perform the work according to the Service Manual or Installation Guide.

- Use two spanners when connect the refrigerant pipe to the unit.
- Make a bend with a radius as large as possible.
- After completing the piping connection, execute vacuum drying for the connecting piping and the indoor unit.
- The vacuum drying must be carried out using the service ports of both the liquid and gas side valves.
- When piping work is finished, check all joints.

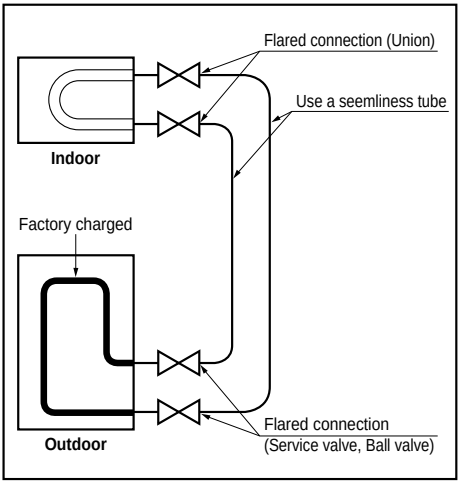

INSTALLATION OF OUT DOOR UNIT

Select a location that satisfies the following conditions. Install the unit firmly in place.

■ **Select the following location**

- A place where the air conditioner can get good ventilation.
- A place where it shall not annoy the neighbors.
- A place where the unit shall be leveled and that can support the weight of unit and withstand its vibrations.

■ **Keep a maintenance space**

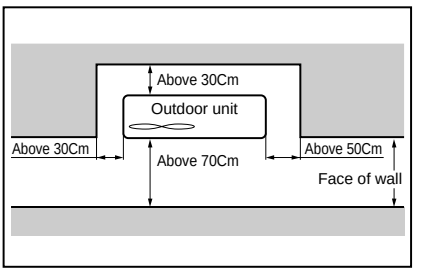

ELECTRICAL WIRING

Perform the electrical wiring work according to the electrical wiring connection.

- All wiring must comply with local requirements.
- Select a power source that is capable of supplying the current required by the air conditioner.
- Use a recognized circuit breaker between the power source and the unit. A disconnection device to adequately disconnect all supply lines must be fitted.
- Capacity of circuit breaker

Capacity	1 Phase
18K BTU/h	15A
24K BTU/h	20A

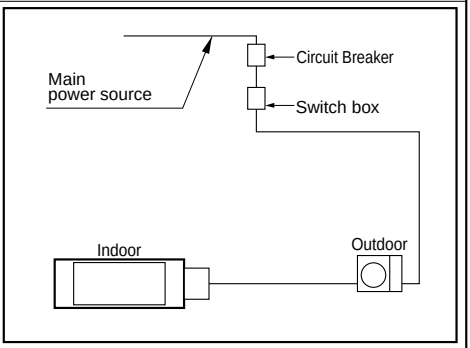

WIRING CONNECTION

INDOOR UNIT

- Remove the control box cover for electrical connection between the indoor and outdoor unit. (Remove crews .)
- Use the cord clamper to fix the cord.

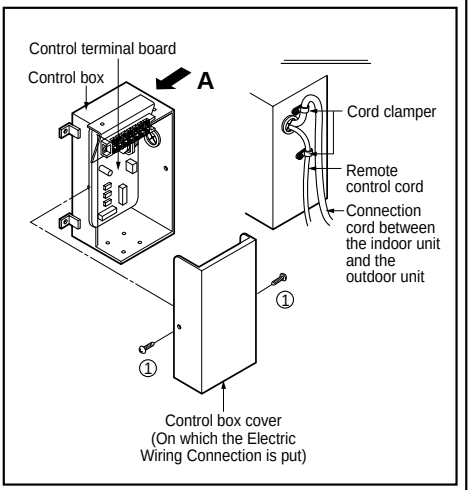

OUTDOOR UNIT

- Remove the control cover for wiring connection.
- Use the cord clamper to fix the cord.
- Earthing work
  Connect the cable of diameter 1.6mm^2 or more to the earthing terminal provided in the control box and do earthing.

■ **Please check !!**

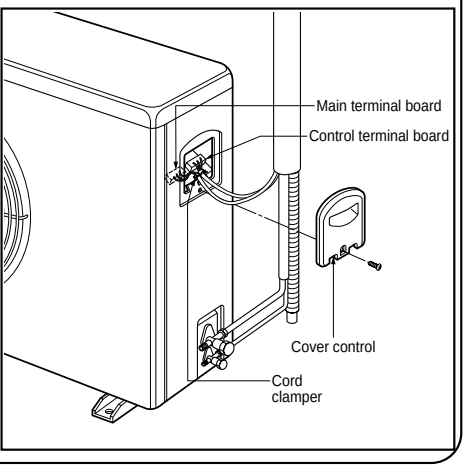

Connecting Pipes to the Indoor Unit

3-1. Preparation of Piping

Main cause of gas leakage is defect in flaring work. Carry out correct flaring work in the following procedure.

1) Cut the pipes and the cable.

- Use the accessory piping kit or the pipes purchased locally.
- Measure the distance between the indoor and the outdoor unit.
- Cut the pipes a little longer than measured distance.
- Cut the cable 1.5m longer than the pipe length.

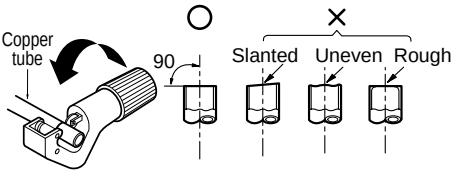

2) Burrs removal

- Completely remove all burrs from the cut cross section of pipe/tube.
- Put the end of the copper tube/pipe to downward direction as you remove burrs in order to avoid to let burrs drop in the tubing.

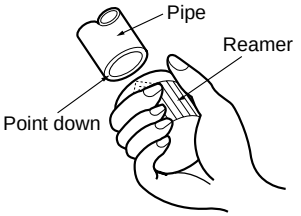

3) Putting nut on

- Remove flare nuts attached to indoor and outdoor units, than put them on pipe/tube having completed burr removal.
  (Not possible to put them on after flaring work)

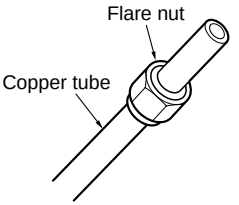

4) Flaring work

- Carry out flaring work using flaring tool as shown below.

Outside Diameter	"A"
1/4"	0~0.5
3/8"	0.5~0.8
1/2"	0.5~0.8
5/8"	0.8~1.0
3/4"	1.0~1.3

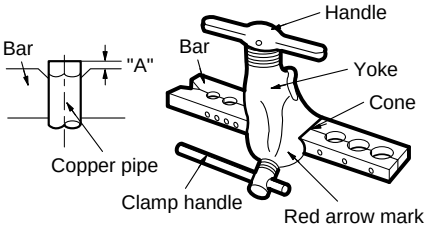

Firmly hold copper tube in a bar(or die) as indicated dimension in the table above.

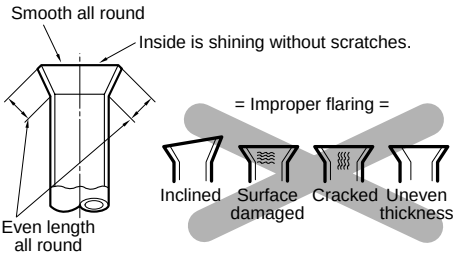

5) Check

- Compare the flared work with figure.
- If flare is noted to be defective, cut off the flared section and do flaring work again.

6) Pipe bending

Annealed copper pipe with small diameter (ø6.35 or ø9.52) can be easily bent manually. In this case, secure large R(radius) for the bend section and gradually bend pipe. If annealed copper pipe is large in diameter (ø15.88 or ø19.05), bend pipe with bender. Use bender appropriate for the pipe diameter.

7) Brazing

In refrigerant piping, bending (in particular, acute bending) must be minimized to reduce piping resistance. Bending is, however, necessary in some places by virtue of the installation position of devices auxiliary to the packaged air conditioner, or of the building structure, piping distance or finishing appearance. If a more acute bend is required than that attainable by pipe bender, perform brazing using ready-made elbow. Aside from this function, brazing also serves to connect straight pipes, generally using ready-made sockets. While brazing, protect piping against heat with wet cloth to avoid damaging valve packing or burning thermal insulator with burner heat. While brazing, blow inert gas (nitrogen gas or carbonic gas) to prevent formation of oxidation film in copper piping; otherwise, the refrigerant circuit will clog. The blowing of nitrogen gas (or carbonic gas) through 3-way valves is described in the following:

8) Refrigerant piping(Flare piping)

When connecting piping, be sure to keep piping dry(keep piping away from water), clean (keep piping away from dust) and airtight (avoid refrigerant leakage).
When connecting piping on rainy days or making a through-hole in wall, take due care to prevent water or plaster from entering piping.

CAUTION

a. This procedure is designed to prevent formation of oxidation film by filling piping with inert gas. Note that excessive gas pressure will generate pinholes at brazed points.
(Nitrogen gas: Supply pressure 0.05~0.1kg/cm^{2}G)
b. When supplying inert gas, be sure to open one end of piping.

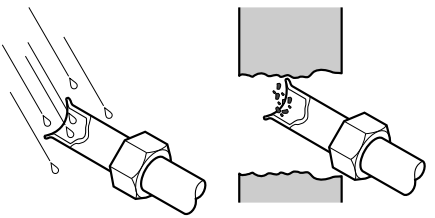

Water enters Plaster enters

Connecting Pipes to the Outdoor Unit

1) Connecting the pipes to the Outdoor unit

1. Align the center of the pipings and sufficiently tighten the flare nut with fingers.

2. Finally, tighten the flare nut with torque wrench until the wrench clicks.
- When tightening the flare nut with torque wrench, ensure the direction for tightening follows the arrow on the wrench.

Pipe size	Torque
1/4"	1.8kg.m
3/8"	4.2kg.m
1/2"	5.5kg.m
5/8"	6.6kg.m
3/4"	6.6kg.m

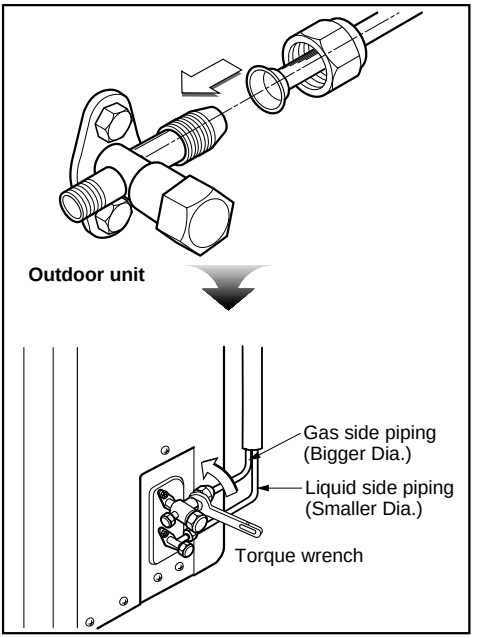

Checking the Drainage

1) Checking the Drainage

1. Remove the Air Filter.

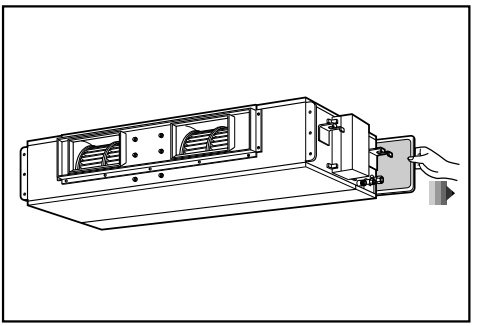

2. Check the drainage.
- Spray one or two glasses of water upon the evaporator.
- Ensure that water flows drain hose of indoor unit without any leakage.

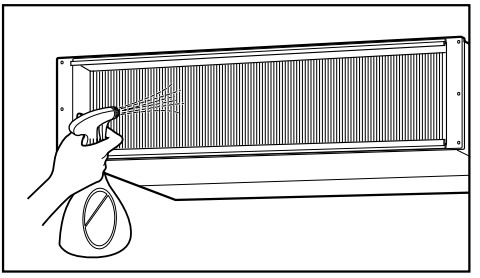

Connecting Cables between Indoor Unit and Outdoor Unit

1) Connecting cables to the Indoor Unit

■ Connect the wires to the terminals on the control board individually according to the outdoor unit connection.

• Ensure that the color of the wires of outdoor unit and the terminal No. are the same as those of indoor unit respectively

■ 18K Btu (1Ø)

• Cooling & Heating type

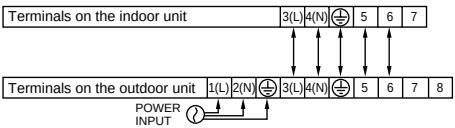

■ 24K Btu (1Ø)

• Cooling & Heating type

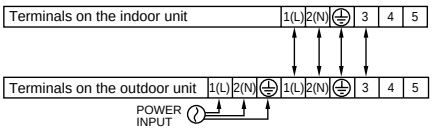

CAUTION

The power cord connected to the outdoor unit should be complied with the following specifications (Rubber insulation, type H05RN-F approved by HAR or SAA).

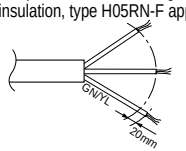

NORMAL CROSS-SECTIONAL AREA

Capacity	1 Phase
18K BTU/h	2.5mm²
24K BTU/h	2.5mm²

The connecting cable connected to the indoor and outdoor unit should be complied with the following specifications (Rubber insulation, type H05RN-F approved by HAR or SAA).

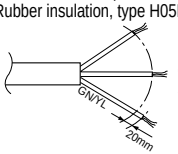

NORMAL CROSS-SECTIONAL AREA 0.75mm² (18K/24K)

If the supply cord is damaged, it must be replaced by a special cord or assembly availible from the manufacturer of its service agent.

⚠ WARNING

Make sure that the screws of the terminal are free from looseness.

2) Clamping of cables

1) Arrange 2 power cables on the control panel.
2) First, fasten the steel clamp with a screw to the inner boss of control panel.
3) For the cooling model, fix the other side of the clamp with a screw strongly.
   For the heat pump model, put the 0.75mm² cable(thinner cable) on the clamp and tighten it with a plastic clamp to the other boss of the control panel.
4) In Australia, the length of power supply cord measured from the entry of the power supply cord to the middle of live pin on the power plug should be over 1.8m.

3) Connecting the cable to the Outdoor Unit

1. Remove the Cover control from the unit by loosening a screw.
   Connect the wires to the terminals on the control board individually as following.
2. Secure the cable onto the control board with the holder (clamper).
3. Refix the cover control to the original position with the screw.

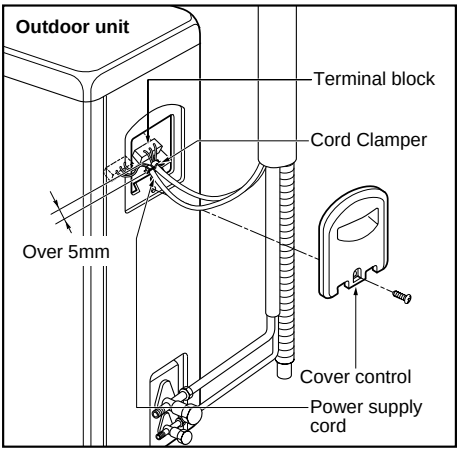

⚠ CAUTION

After the confirmation of the above conditions, prepare the wiring as follows:

1) Never fail to have an individual power specialized for the air conditioner. As for the method of wiring, be guided by the circuit diagram pasted on the inside of control box cover.

2) Provide a circuit breaker switch between power source and the unit.

3) The screw which fasten the wiring in the casing of electrical fittings are liable to come loose from vibrations to which the unit is subjected during the course of transportation. Check them and make sure that they are all tightly fastened. (If they are loose, it could give rise to burn-out of the wires.)

4) Specification of power source

5) Confirm that electrical capacity is sufficient.

6) Be sure that the starting voltage is maintained at more than 90 percent of the rated voltage marked on the name plate.

7) Confirm that the cable thickness is as specified in the power sources specification. (Particularly note the relation between cable length and thickness.)

8) Never fail to equip a leakage breaker where it is wet or moist.

9) The following troubles would be caused by voltage drop-down.

- Vibration of a magnetic switch, damage on the contact point there of, fuse breaking, disturbance to the normal function of a overload protection device.
- Proper starting power is not given to the compressor.

4) Form the pipings

1. **Wrap the connecting portion of indoor unit with the Insulation material and secure it with two Plastic Bands. (for the right pipings)**
   - If you want to connect an additional drain hose, the end of the drain-outlet should keep distance from the ground. (Do not dip it into water, and fix it on the wall to avoid swinging in the wind.)

In case of the Outdoor unit being installed below position of the Indoor unit.

2. **Tape the Pipings, drain hose and Connecting Cable from bottom to top.**
3. **Form the pipings gathered by taping along the exterior wall and fix it onto the wall by saddle or equivalent.**

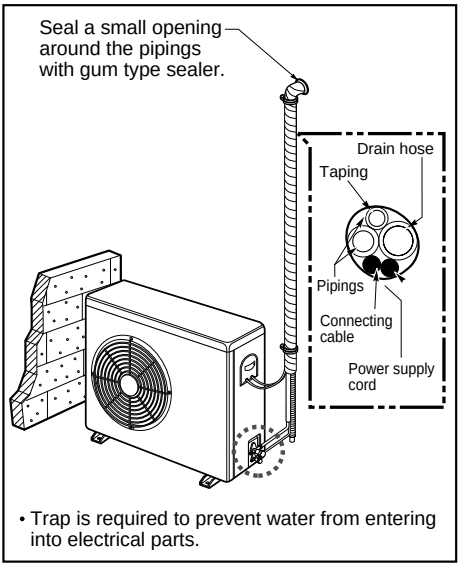

• Trap is required to prevent water from entering into electrical parts.

In case of the Outdoor Unit being installed above position of the Indoor Unit.

2. **Tape the Pipings and Connecting cable from bottom to top.**
3. **Form the pipings gathered by taping along the exterior wall, and make the trap prevent water from entering into the room.**
4. **Fix the pipings onto the wall by saddle or equivalent.**

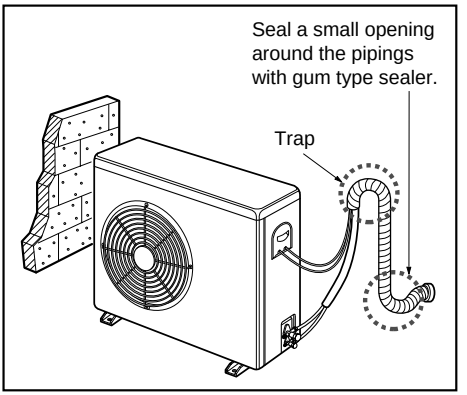

Air Purging of the Connecting Pipes and the Indoor Unit

The air which contains moisture remaining in the refrigeration cycle may cause a malfunction on the compressor.

1. Confirm that both the liquid side valve and the gas side valve are set to the closed position.
2. After connecting the piping, check the joints for gas leakage with gas leak detector.
3. Remove the service port nut, and connect the gauge manifold and the vacuum pump to the service port by the charge hose.
4. Vacuum the indoor unit and the connecting pipes until the pressure in them lowers to below -76cmHg.
5. Remove the valve stem nuts, and fully open the stems of the 2-way and 3-way valves with a hexagon wrench.
6. Tighten the valve stem nuts of the 2-way valve and 3-way valve.
7. Disconnect the charge hose and fit the nut to the service port.
   (Tightening torque: 1.8kg.m)

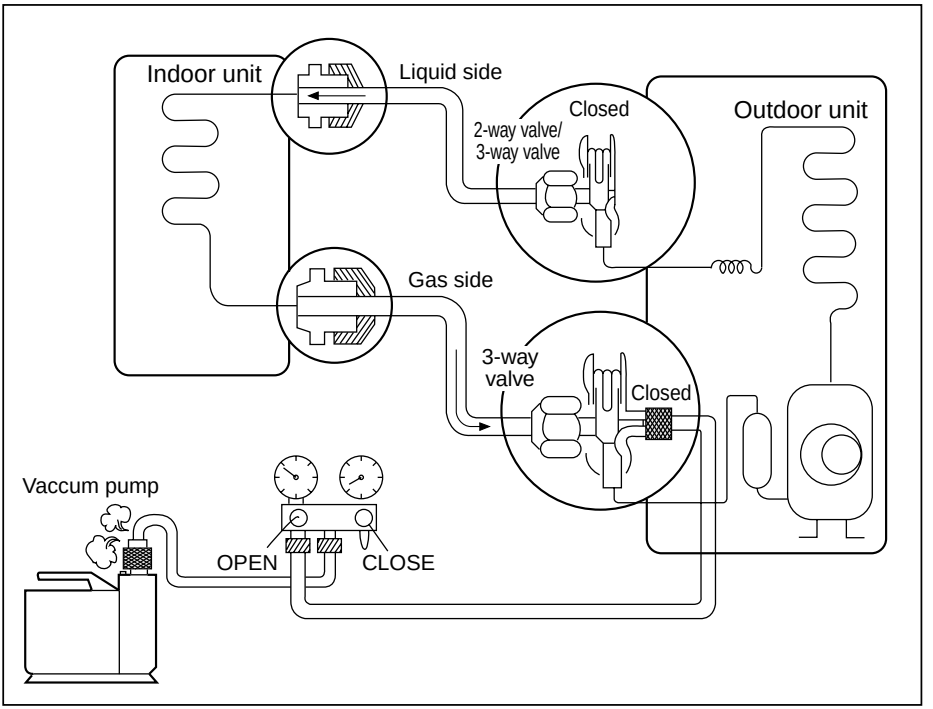

Group Control

It operates maximum 16 Units by only one Wired Remote Controller, and each Unit starts sequentially to prevent overcurrent.

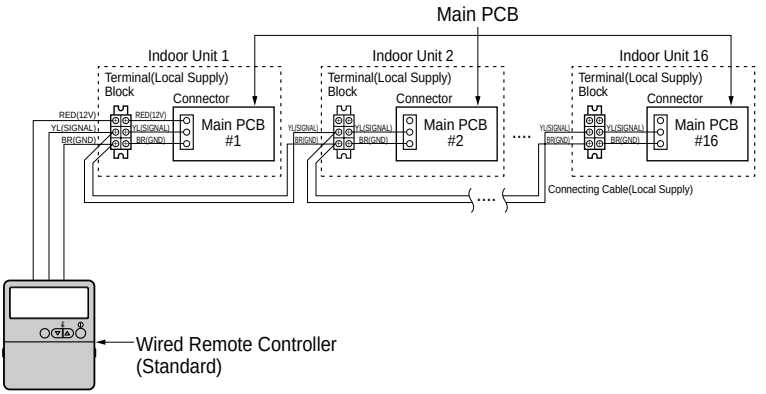

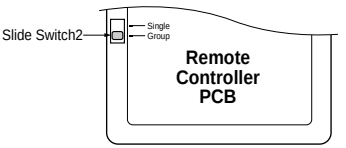

- Using the supplied Wired Remote Controller, wire them like above.
- Move slide switch 2 to "Group" position.
- Ensure that the color of wire.

Two Thermistor system

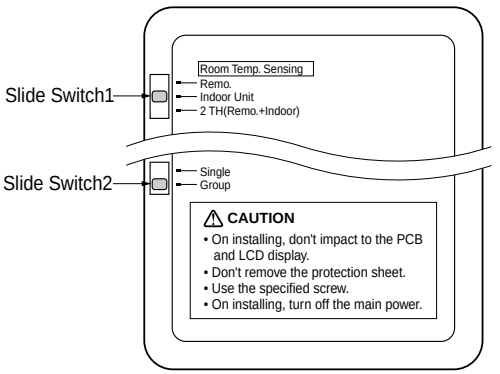

- Open the rear cover of Remote Controller to set up the mode.
- Selectable options are three as follows.
  - Remo: Sensing the room Temperature.
  - Indoor Unit: Sensing the intake air into indoor Unit.
  - 2 TH: Sensing the lower temperature of the two thermistors.
- To set up the mode, adjust the slide switch to desired mode position on installing.

E.S.P.(External Static Pressure) Setting

(1) Open the rear cover of the wired remote-controller to set the mode.
(2) Select one of three selectable modes as follows.

■ Without Zone System

1. Position V-H, F-H:
   • This position sets the maximum E.S.P as a default set.
2. Position V-L:
   • This position sets the minimum E.S.P as a default set.

■ With Zone System

1. Position V-H:
   • Maximum E.S.P setting & Fan speed is varied according to the state of dampers by micom.
2. Position F-H:
   • Maximum E.S.P setting & Fan speed doesn't vary according to the opening & Closing of dampers.
3. Position V-L:
   • Minimum E.S.P setting & Fan speed is varied according to the state of dampers by micom.

* Maximum : 8mmAq
Minimum : 2mmAq

(3) Move the slide switch to set position.

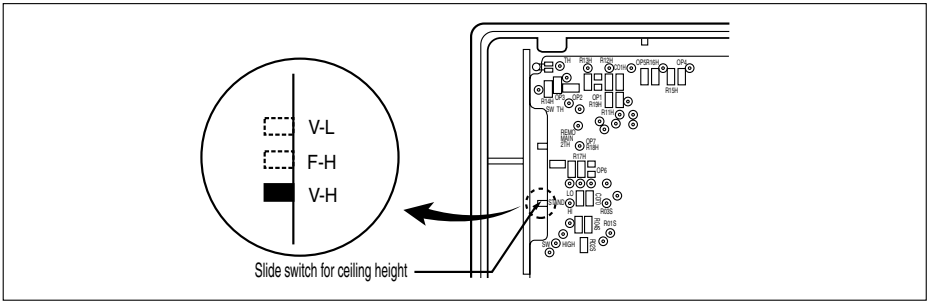

(4) Close the rear cover and check if it works normally.

⚠ CAUTION

• Select the position after checking duct work and E.S.P of the unit.
• Maunfactured in the position F-H.

How to Set E.S.P?

Procedure of RPM change:

Ex) External Static pressure is 4mmAq for Model Name "LB-H2460RH"

• To protect the unit, compressor is designed to be off during E.S.P. setting.

1 Push the "On/Off" button.
The unit will start.



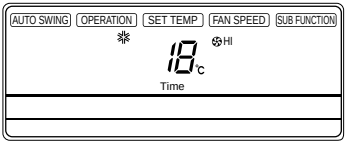

2 Push the "Timer" and "Wind" button simultaneously for more then 3 seconds.

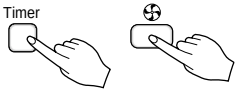

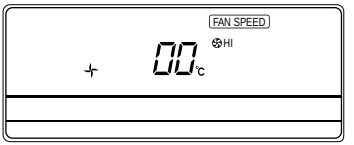

3 Push the "Up" or "Down" button for E.S.P adjustment.
And, adjust the number which you want.(In this example, the number is "210". Refer to the table 1 on the next page.)

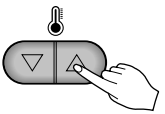

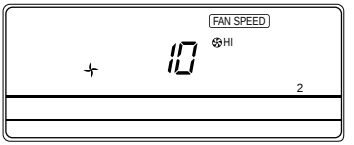

Note: The range of selection is from 1~254. Since, the display is two Digit only.
If the range selection is above 100 then the third digit will appear in the screen as shown.

4 Shift the fan speed mode by pressing the fan speed button.
And then, Adjust numbers of next steps by repeating the stage 3.
(In this example, the numbers are "230" and "250" respectly)



5 Push the "Timer" and "Wind" button simultaneously for more than 3 seconds.
Then, Wind Data is memorized by the EEPROM of the main PCB.

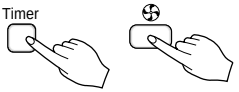

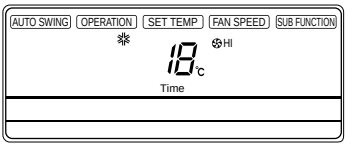

[Table 1]

Static Pressure(mmAq)			0	2	4	6	8	10
Model Name	Step	CMM(CFM)	Setting Value					
LBNH1863BL	High	16.5(583)	235	230	225	215	180	
	Med	14.5(512)	248	238	235	230	215	
	Low	13(459)	254	252	248	245	240	
ABNH246HLAC	High	18(636)	220	205	190	50	1	
	Med	16.5(583)	235	230	220	200	100	
	Low	14(494)	250	240	235	230	210	

Note: 1. To get the desired Airflow & E.S.P combination from the table set the matching value from the table. Value other than that in table will not give the combinations of airflow& ESP which are mentioned in the table.

2. Table 1 is based at 230V. According to the fluctuation of voltage, air flow rate varies.



P/No.: 3828A20342L Printed in Korea

After reading this manual, keep it in a place easily accessible to the user for future reference.