website http://www.lgservice.com
e-mail http://www.lgeservice.com/techsup.html

LG

ENGLISH

РУССКИЙ ЯЗЫК

LG Ceiling suspended Type Air Conditioner

INSTALLATION MANUAL

MODELS: VL, VK, VJ Chassis

AIO64

IMPORTANT

- **Please read this instruction manual completely before installing the product.**
- **When the power cord is damaged, replacement should be performed by authorized personnel only.**
- **Installation work must be performed in accordance with the national wiring standards by authorized personnel only.**
- **Please retain this installation manual for future reference after reading it thoroughly.**

TABLE OF CONTENTS

Installation Requirements

Safety Precautions 3

Introduction 8

Symbols used in this manual 8

Features 8

Installation 9

Installation parts 9

Installation tools 9

Installation map 10

Selecting the best location 11

Piping Length and Elevation 12

Preparing Work for Installation 12

Mounting the anchor Nut & Bolt(Ceiling Mounting) 13

Drill a Hole in the Wall 14

Installation instructions of Indoor Unit installation 14

Flaring Work 15

Connecting of Piping - Indoor 16

Connection of the pipes-Outdoor 18

Connecting the Cables 18

Checking the Drainage 21

Forming the Piping 22

Air Purging 23

Side Cover Assembly 25

Test Running 26

Required Parts

- ❑ Four type "A" screws & plastic anchors
- ❑ Connecting cable
- ❑ Installation guide map
- ❑ Pipes: Gas side .....3/8", 1/2"
  Liquid side .....1/4"
- ❑ Insulation materials
- ❑ Additional drain pipe
  (Outer diameter .....15.5mm)
- ❑ Two type "B" screws

Required Tools

- ❑ Level gauge
- ❑ Screw driver
- ❑ Electric drill
- ❑ Hole core drill
  (ø25mm, ø45mm, ø70mm)
- ❑ Horizontal meter
- ❑ Flaring tool set
- ❑ Specified torque wrenches
  1.8kg.m, 4.2kg.m, 5.5kg.m,
  6.6kg.m
  (different depending on model No.)
- ❑ Spanner .....Half union
- ❑ A glass of water
- ❑ Screw driver
- ❑ Hexagonal wrench(4mm)
- ❑ Leak detector
- ❑ Vacuum pump
- ❑ Gauge manifold
- ❑ Owner's manual
- ❑ Thermometer
- ❑ Remote control holder

ENGLISH

Safety Precautions

To prevent injury to the user or other people and property damage, the following instructions must be followed.

- Be sure to read before installing the air conditioner.
- Be sure to observe the cautions specified here as they include important items related to safety.
- Incorrect operation due to ignoring instruction will cause harm or damage. The seriousness is classified by the following indications.

⚠WARNING	This symbol indicates the possibility of death or serious injury.
⚠CAUTION	This symbol indicates the possibility of injury or damage to properties only.

■ Meanings of symbols used in this manual are as shown below.

⃠	**Be sure not to do.**
❗	**Be sure to follow the instruction.**

⚠WARNING

■ Installation

Do not use a defective or underrated circuit breaker. Use this appliance on a dedicated circuit.

• There is risk of fire or electric shock.

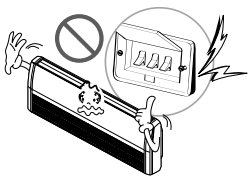

For electrical work, contact the dealer, seller, a qualified electrician, or an Authorized Service Center.

• Do not disassemble or repair the product. There is risk of fire or electric shock.

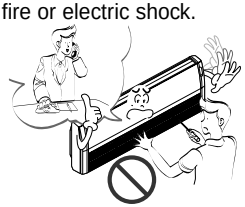

Always ground the product.

• There is risk of fire or electric shock.

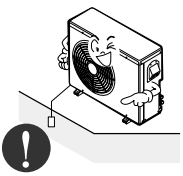

Install the panel and the cover of control box securely.

• There is risk of fire or electric shock.



Always install a dedicated circuit and breaker.

• Improper wiring or installation may cause fire or electric shock

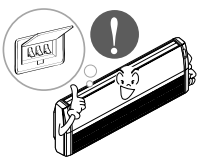

Use the correctly rated breaker or fuse.

• There is risk of fire or electric shock.

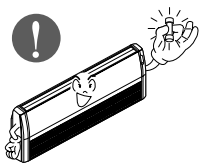

Do not modify or extend the power cable.

- There is risk of fire or electric shock.

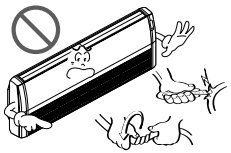

Do not install, remove, or re-install the unit by yourself (customer).

- There is risk of fire, electric shock, explosion, or injury.

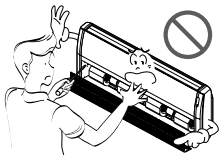

Be cautious when unpacking and installing the product.

- Sharp edges could cause injury. Be especially careful of the case edges and the fins on the condenser and evaporator.

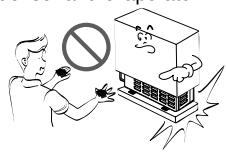

For installation, always contact the dealer or an Authorized Service Center.

- There is risk of fire, electric shock, explosion, or injury.



Do not install the product on a defective installation stand.

- It may cause injury, accident, or damage to the product.

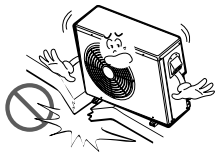

Be sure the installation area does not deteriorate with age.

- If the base collapses, the air conditioner could fall with it, causing property damage, product failure, and personal injury.

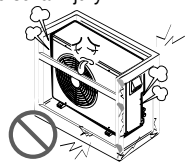

■ Operation

Do not let the air conditioner run for a long time when the humidity is very high and a door or a window is left open.

- Moisture may condense and wet or damage furniture.

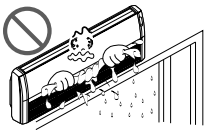

Take care to ensure that power cable could not be pulled out or damaged during operation.

- There is risk of fire or electric shock.

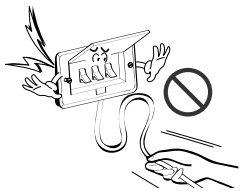

Do not place anything on the power cable.

- There is risk of fire or electric shock.

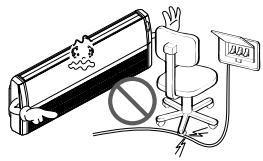

Do not plug or unplug the power supply plug during operation.

- There is risk of fire or electric shock.

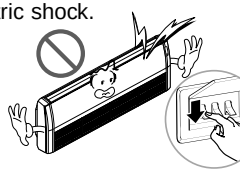

Do not touch(operate) the product with wet hands.

- There is risk of fire or electrical shock.



Do not place a heater or other appliances near the power cable.

- There is risk of fire and electric shock.

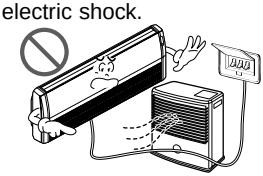

Do not allow water to run into electric parts.

- It may cause There is risk of fire, failure of the product, or electric shock.

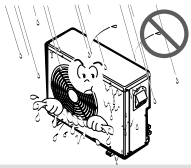

Do not store or use flammable gas or combustibles near the product.

- There is risk of fire or failure of product.

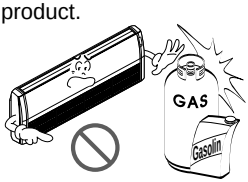

Do not use the product in a tightly closed space for a long time.

- Oxygen deficiency could occur.

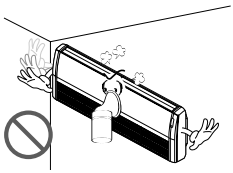

When flammable gas leaks, turn off the gas and open a window for ventilation before turn the product on.

- Do not use the telephone or turn switches on or off. There is risk of explosion or fire

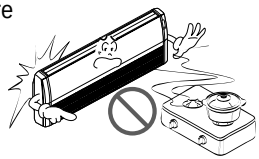

If strange sounds, or small or smoke comes from product. Turn the breaker off or disconnect the power supply cable.

- There is risk of electric shock or fire.



Stop operation and close the window in storm or hurricane. If possible, remove the product from the window before the hurricane arrives.

- There is risk of property damage, failure of product, or electric shock.

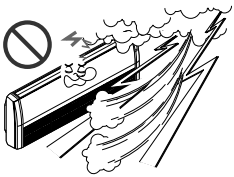

Do not open the inlet grill of the product during operation. (Do not touch the electrostatic filter, if the unit is so equipped.)

- There is risk of physical injury, electric shock, or product failure.



When the product is soaked (flooded or submerged), contact an Authorized Service Center.

- There is risk of fire or electric shock.



Be cautious that water could not enter the product.

- There is risk of fire, electric shock, or product damage.

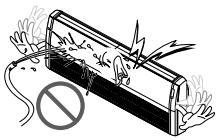

Ventilate the product from time to time when operating it together with a stove, etc.

- There is risk of fire or electric shock.

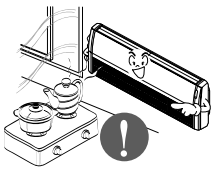

Turn the main power off when cleaning or maintaining the product.

- There is risk of electric shock.

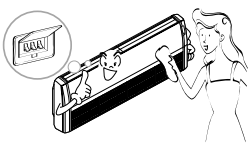

When the product is not be used for a long time, disconnect the power supply plug or turn off the breaker.

- There is risk of product damage or failure, or unintended operation.

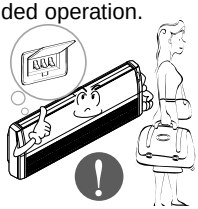

Take care to ensure that nobody could step on or fall onto the outdoor unit.

- This could result in personal injury and product damage.



⚠CAUTION

■ Installation

Always check for gas (refrigerant) leakage after installation or repair of product.

- Low refrigerant levels may cause failure of product.

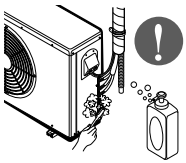

Install the drain hose to ensure that water is drained away properly.

- A bad connection may cause water leakage.

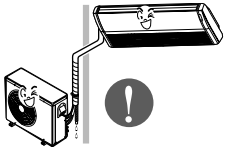

Keep level even when installing the product.

- To avoid vibration or water leakage.

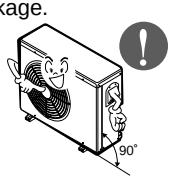

Do not install the product where the noise or hot air from the outdoor unit could damage the neighborhoods.

- It may cause a problem for your neighbors.



Use two or more people to lift and transport the product.

- Avoid personal injury.



Do not install the product where it will be exposed to sea wind (salt spray) directly.

- It may cause corrosion on the product. Corrosion, particularly on the condenser and evaporator fins, could cause product malfunction or inefficient operation.

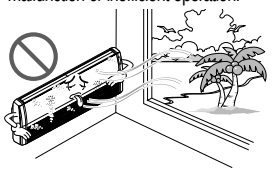

■ Operation

Do not expose the skin directly to cool air for long periods of time. (Don't sit in the draft.)

- This could harm to your health.



Do not use the product for special purposes, such as preserving foods, works of art, etc. It is a consumer air conditioner, not a precision refrigeration system.

- There is risk of damage or loss of property.

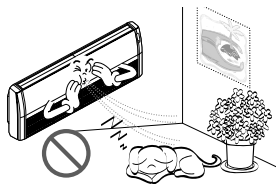

Do not block the inlet or outlet of air flow.

• It may cause product failure.

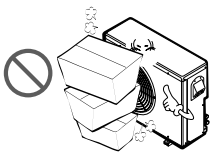

Use a soft cloth to clean. Do not use harsh detergents, solvents, etc.

• There is risk of fire, electric shock, or damage to the plastic parts of the product.



Do not touch the metal parts of the product when removing the air filter. They are very sharp!

• There is risk of personal injury.

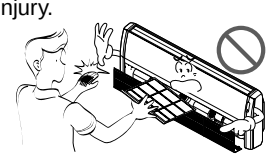

Do not step on or put anyting on the product. (outdoor units)

• There is risk of personal injury and failure of product.



Always insert the filter securely. Clean the filter every two weeks or more often if necessary.

• A dirty filter reduces the efficiency of the air conditioner and could cause product malfunction or damage.



Do not insert hands or other objects through the air inlet or outlet while the product is operated.

• There are sharp and moving parts that could cause personal injury.



Do not drink the water drained from the product.

• It is not sanitary and could cause serious health issues.



Use a firm stool or ladder when cleaning or maintaining the product.

• Be careful and avoid personal injury.

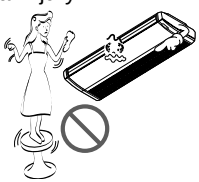

Replace the all batteries in the remote control with new ones of the same type. Do not mix old and new batteries or different types of batteries.

• There is risk of fire or explosion

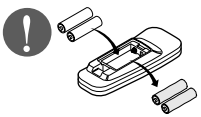

Do not recharge or disassemble the batteries. Do not dispose of batteries in a fire.

• They may burn or explode.

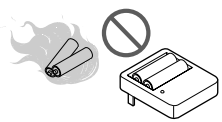

If the liquid from the batteries gets onto your skin or clothes, wash it well with clean water. Do not use the remote if the batteries have leaked.

• The chemicals in batteries could cause burns or other health hazards.

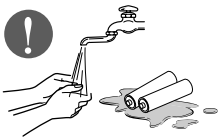

Introduction

Symbols used in this Manual

This symbol alerts you to the risk of electric shock.

This symbol alerts you to hazards that may cause harm to the air conditioner.

NOTICE **This symbol indicates special notes.**

Features

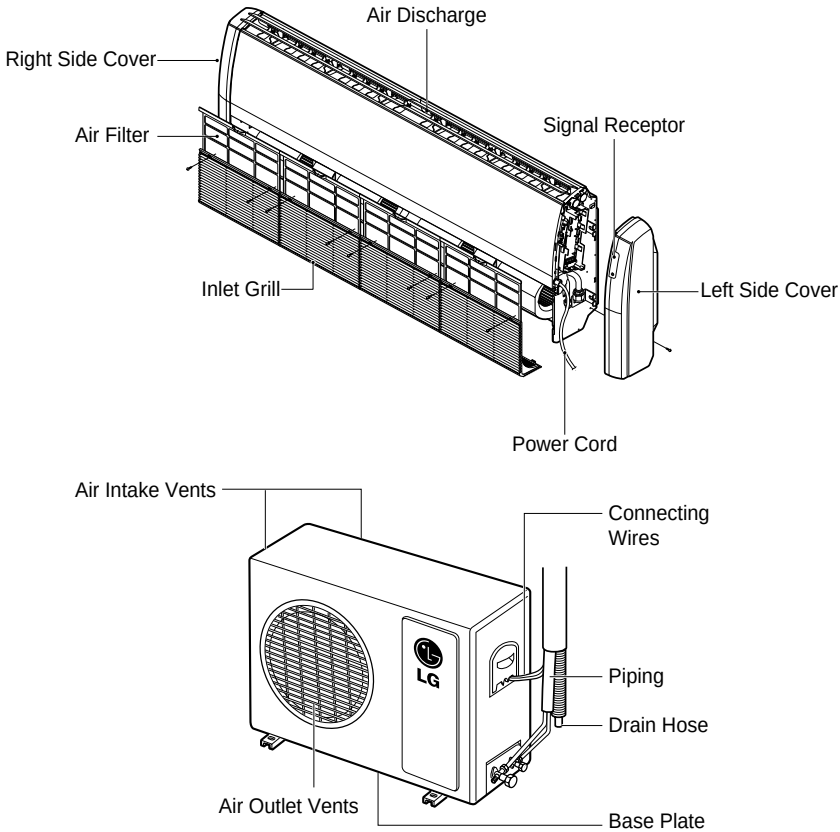

Installation

Read carefully, and then follow step by step.

Installation Parts

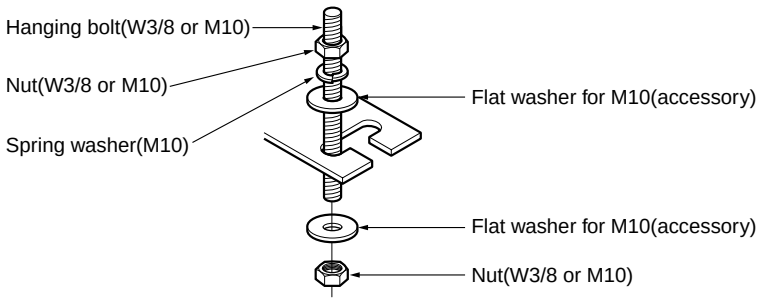

Installation Tools

Figure	Name	Figure	Name
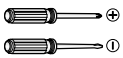	Screw driver		Ohmmeter
	Electric drill		Hexagonal wrench
	Measuring tape, Knife	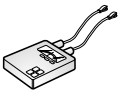	Ammeter
	Hole core drill		Gas-leak detector
	Spanner	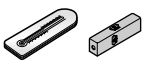	Thermometer, Horizontal meter
	Torque wrench		Flaring tool set

Installation Map

NOTICE Installation parts you should purchase. (※)

Ceiling Mounting

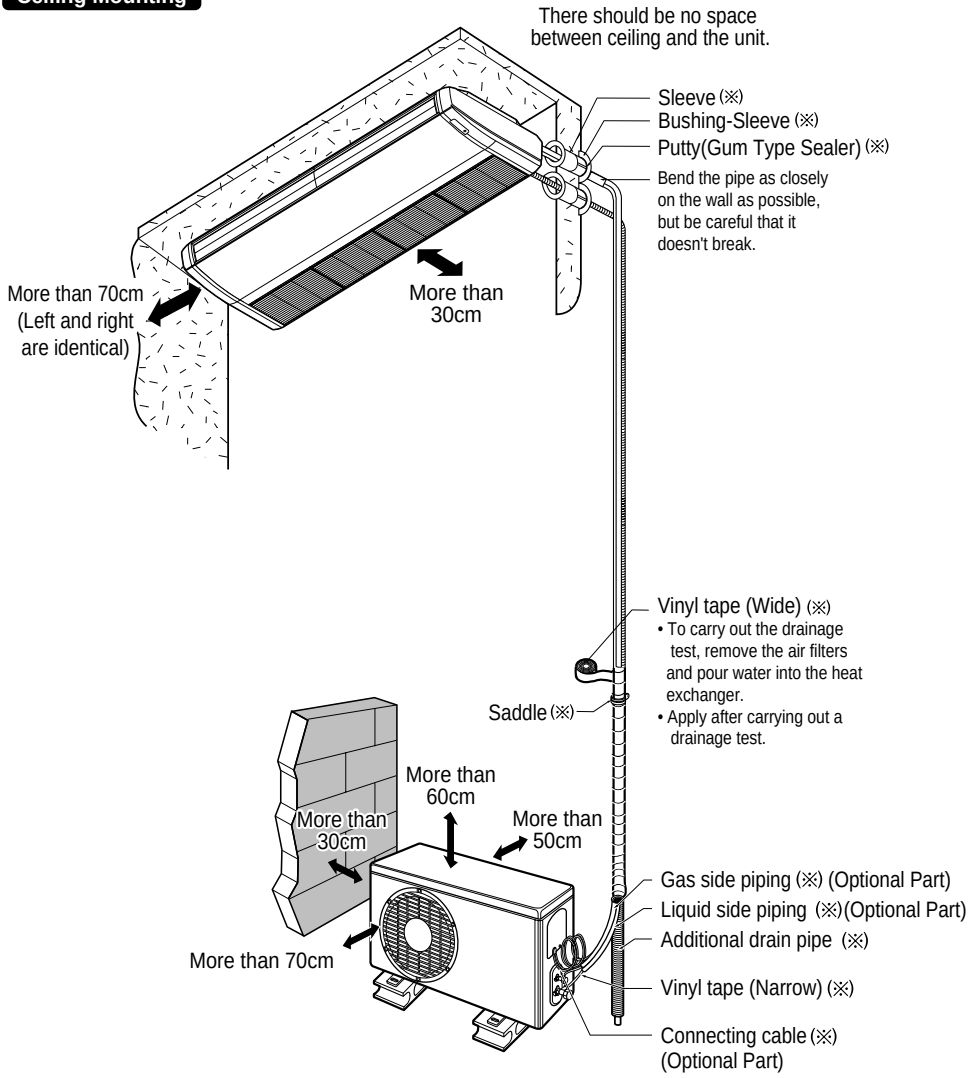

Select the best Location

Indoor unit

1. Do not have any heat or steam near the unit.
2. Select a place where there are no obstacles in front of the unit.
3. Make sure that condensation drainage can be conveniently routed away.
4. Do not install near a doorway.
5. Ensure that the interval between a wall and the left (or right) of the unit is more than 70cm.
6. Use a stud finder to locate studs to prevent unnecessary damage to the wall.

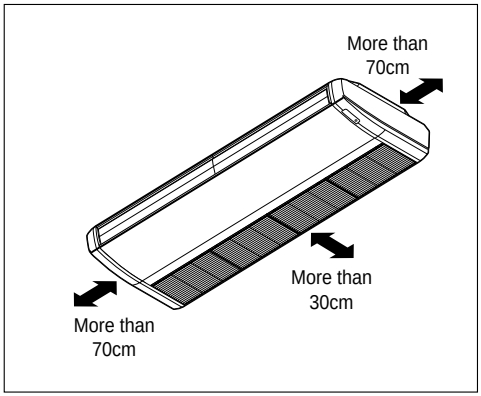

Outdoor unit

1. If an awning is built over the unit to prevent direct sunlight or rain exposure, make sure that heat flow from the condenser is not restricted.
2. Ensure that the space around the back and sides is more than 30cm. The front of the unit should have more than 70cm of space.
3. Do not place animals and plants in the path of the warm air.
4. Take the weight of the air conditioner into account and select a place where noise and vibration are minimum.
5. Select a place where the warm air and noise from the air conditioner do not disturb neighbors.

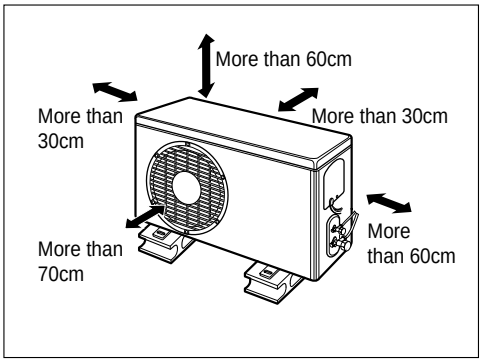

Piping Length and Elevation

Models	Pipe Size		Standard Length (m)	Max. Elevation B (m)	Max. Length A (m)	Additional Refrigerant (g/m)
	GAS	LIQUID				
36k	5/8"(Ø15.88)	1/4"(Ø6.35)	5	30	50	50
48k	3/4"(Ø19.05)	3/8"(Ø9.521)	5	30	50	60
60k	3/4"(Ø19.05)	3/8"(Ø9.521)	5	20	30	60

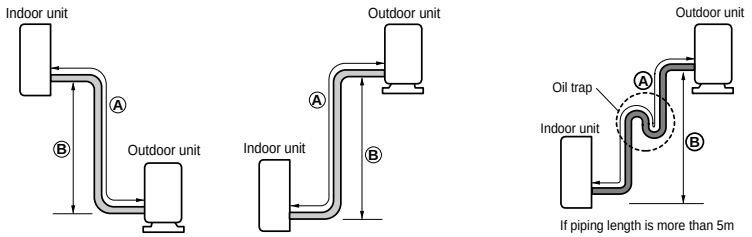

⚠CAUTION

: Capacity is based on standard length and maximum allowance length is on the basis of reliability.
Oil trap should be installed every 5~7 meters

Preparing Work for Installation

Open side cover

1. Remove two screws from side-cover as shown in fig.
2. Unlock side-cover from side panel by slightly pulling the edge of side cover.
3. Tap the side-cover with your palm on the backside.(Inlet grill side.)
4. Hold the side-cover with other hand while tapping to prevent it to fall down.

Recommendation: it is recommended to select the left side for drain to have common hole in the side-cover along with pipe and wiring.

5. Remove the rubber stopple in the desired drain direction.
6. Knock out the pipe hole from the left side-cover with the help or nipper/plier.
7. Knock hole on right side-cover only if right side is selected for water drain.

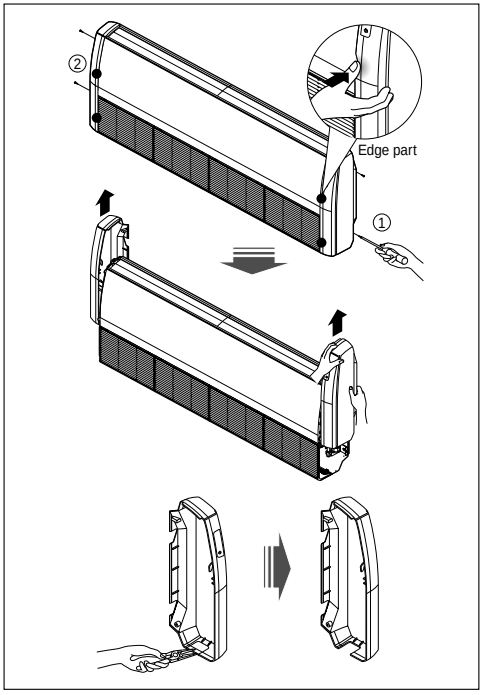

MOUNTING THE ANCHOR NUT AND BOLT

- Prepare 4 suspension bolts. (Each bolts length should be same.)
- Measure and mark the position for the Suspension bolts and the piping hole.
- Drill the hole for anchor nut on the ceiling.
- Insert the nuts and washer onto the suspension bolts for locking the suspension bolts on the ceiling.
- Mount the suspension bolts to the anchor-nuts firmly.
- Secure the hangers onto the Suspension bolts (adjust level roughly.) using nuts, washers and spring washers.
- Adjust a level with a level gauge on the direction of left-right, back-forth by adjusting suspension bolts.
- Adjust a level on the direction of top-bottom by adjusting supension bolts. Then the unit will be declined to the bottomside so as to drain well.

DIM. / MODEL	A	B
VL	1655	320
VK	1255	320
VJ	855	320

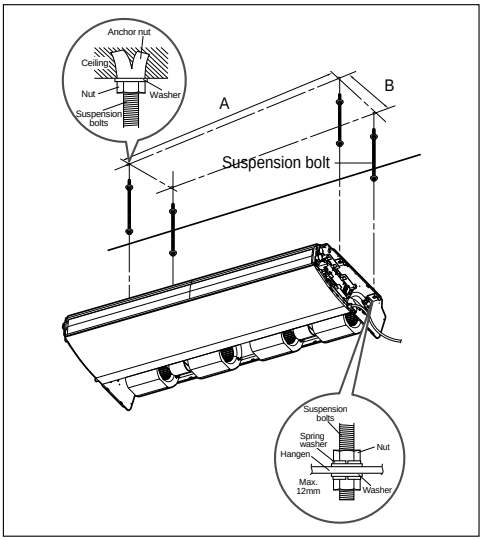

⚠CAUTION

: Tighten the nut and bolt to prevent unit falling.

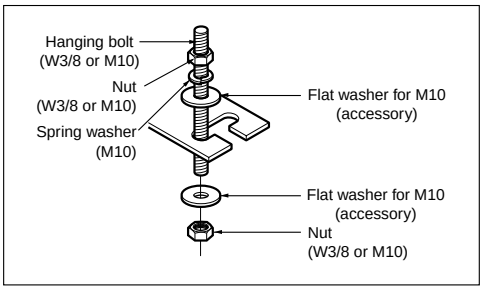

DRILL A HOLE IN THE WALL.

- Drill the piping hole with a ø70mm hole core drill. Drill the piping hole at either the right or the left with the hole slightly slanted to the outdoor side.

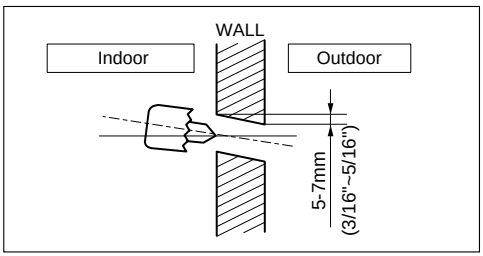

Indoor unit installation

Hang the Indoor unit on suspension bolt as per following guidelines:

1. Lift the indoor unit to sufficient height.
2. Insert the suspended part of four suspension bolt in the four hangers provided on the side of main body one by one.
3. Lower the indoor unit till the hangers rest on their respective flat washer.
4. Adjust the level in the top down direction by adjusting the suspension bolts. Inclined the indoor unit as per direction provided in the fig

⚠CAUTION

: Installation Information For Declination

1. **Install declination** of the indoor unit is very **important for the drain** of the convertible type air conditioner.
2. Minimum thickness of the insulation for the connecting pipe shall be 10mm.
3. If the Installation Plates are fixed to horizontal line, the indoor unit after installing will be declined to the bottomside.

Front of view

- The unit must be horizontal or inclined at angle.
- The inclination should be less than or equal to 1° or in between 10 to 20mm inclined in drain direction as shown in fig.

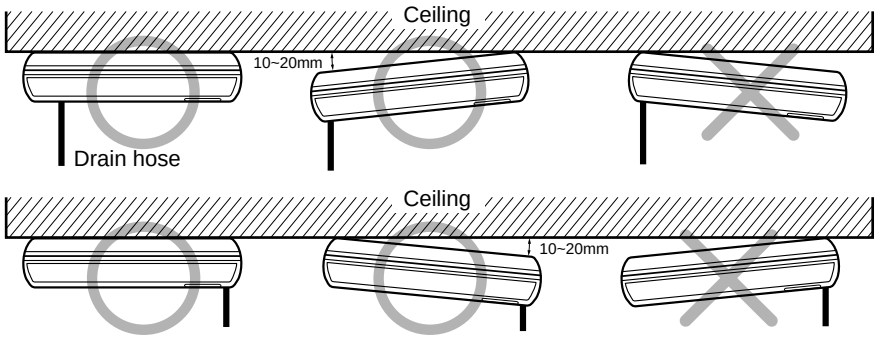

Side of view

- The unit must be declined to the bottomside of the unit when finished installation.

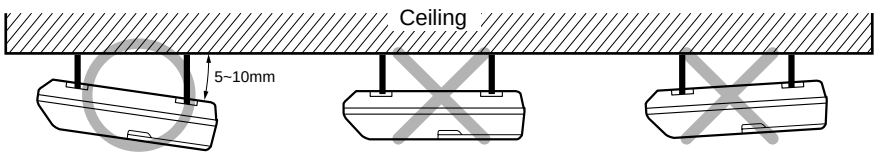

Flaring Work

Main cause for gas leakage is due to defect in flaring work. Carry out correct flaring work in the following procedure.

Cutting the pipes and the cable.

1. Use the piping kit accessory or the pipes purchased locally.
2. Measure the distance between the indoor and the outdoor unit.
3. Cut the pipes a little longer than measured distance.
4. Cut the cable 1.5m longer than the pipe length.

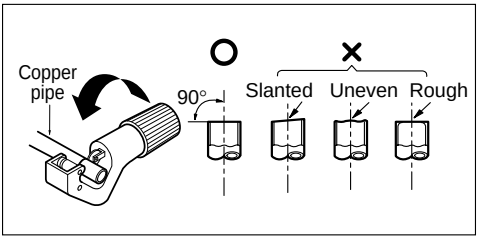

Removing burrs

1. Completely remove all burrs from the cut cross section of pipe/tube.
2. Put the end of the copper tube/pipe in a downward direction as you remove burrs in order to avoid dropping burrs into the tubing.

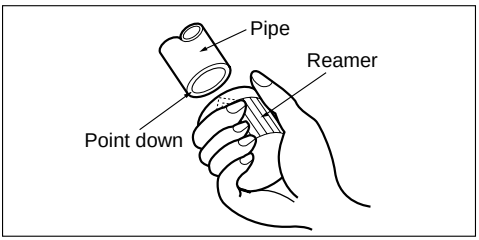

Putting nut on

1. Remove flare nuts attached to indoor and outdoor unit, then put them on pipe/tube having completed burr removal.
   (not possible to put them on after flaring work)

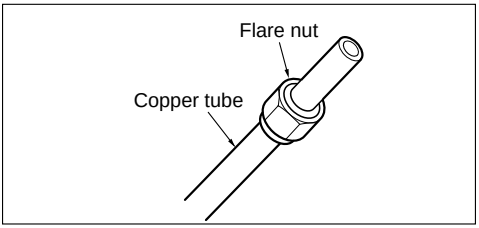

Flaring work

1. Firmly hold copper pipe in a die in the dimension shown in the table below.
2. Carry out flaring work with the flaring tool.

Outside diameter		A
mm	inch	mm
Ø6.35	1/4	0~0.5
Ø9.52	3/8	0~0.5
Ø12.7	1/2	0~0.5
Ø15.88	5/8	0~1.0
Ø19.05	3/4	1.0~1.3

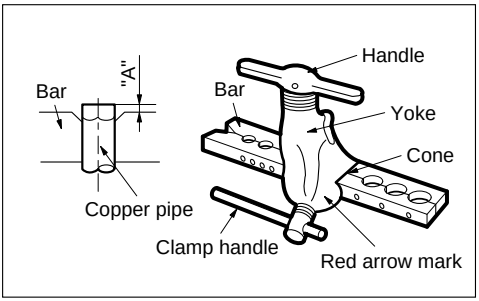

Check

1. Compare the flared work with the figure by.
2. If a flared section is defective, cut it off and do flaring work again.

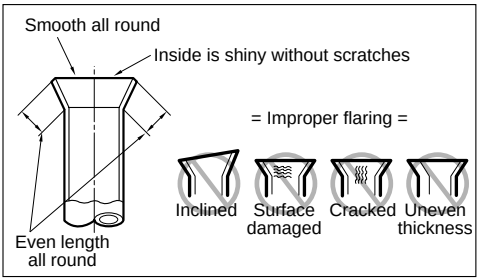

Connecting of Piping - Indoor

1. Prepare the indoor unit piping and drain hose for installation thought the wall.
2. Align the center of the liquid side pipe.
3. Sufficiently tight the flare nut of the liquid side pipe with hands.
4. Tight the flare nut with two spanner, as shown.
5. Align the center of gas side pipes.
6. Sufficiently tight the flare nut of the gas side pipe with hands.
7. Tight the flare nut with two spanner as shown.

Outside diameter		Torque
mm	inch	kg·m
Ø6.35	1/4	1.8
Ø9.52	3/8	4.2
Ø12.7	1/2	5.5
Ø15.88	5/8	6.6
Ø19.05	3/4	6.6

8. If drain pipe need to be extended at the indoor side attach the drain pipe with indoor unit drain hose as shown in fig.

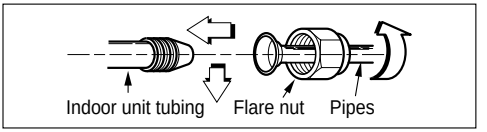

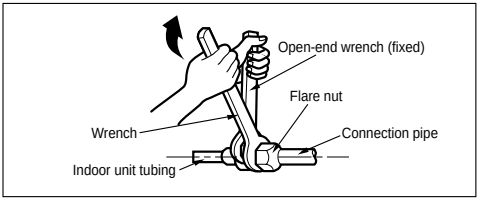

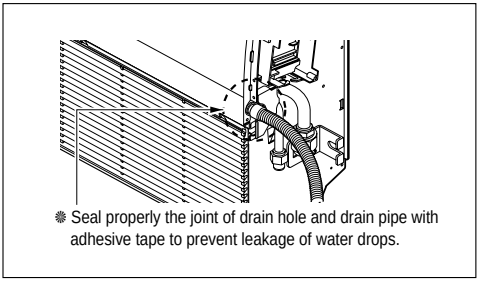

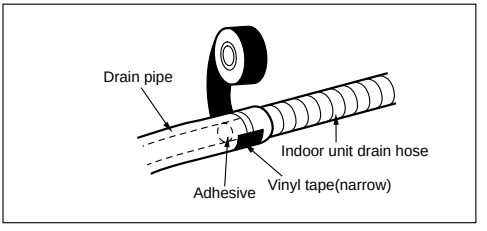

Wrap the insulation material around connection portion

9. Overlap the connection connecting pipe insulation material and the indoor pipe insulation martial. Bind them together with the vinyl tape. So that here may not be any gap.

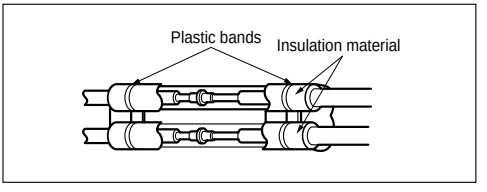

10. If the piping and the drain hose are in common direction bundle the piping and the drain hose together by wrapping them with vinyl tape.

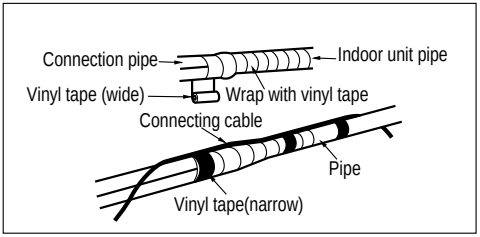

11. Rout the indoor tubing and the drain hose to the required piping hole.

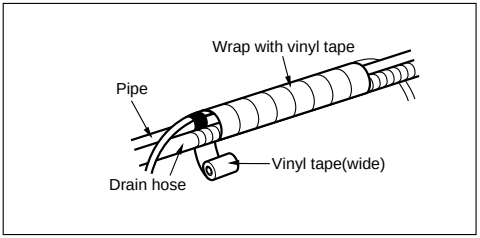

NOTICE

Common direction of drain and piping.
Tape the tubing, drain hose and the connecting cable. Be sure that the drain hose is located at the lowest side of the bundle. Locating at the upper side can cause drain pan to overflow inside the unit.

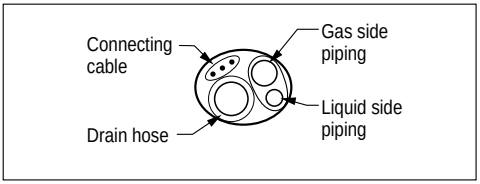

NOTICE

If the drain hose is routed inside the room, insulate the hose with an insulation material* so that dripping from "sweating"(condensation) will not damage furniture or floors.
***Foamed polyethylene or equivalent is recommended.**

Connection of the pipes-Outdoor

Align the center of the pipings and sufficiently tighten the flare nut by hand.

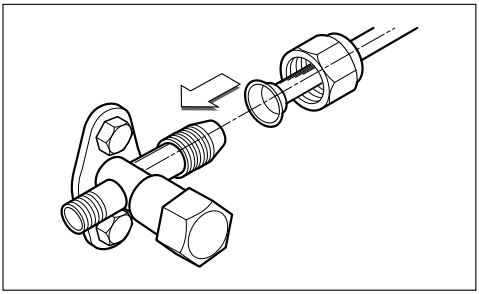

Finally, tighten the flare nut with torque wrench until the wrench clicks.

- When tightening the flare nut with torque wrench, ensure the direction for tightening follows the arrow on the wrench.

Outside diameter		Torque
mm	inch	kg·m
Ø6.35	1/4	1.8
Ø9.52	3/8	4.2
Ø12.7	1/2	5.5
Ø15.88	5/8	6.6
Ø19.05	3/4	6.6

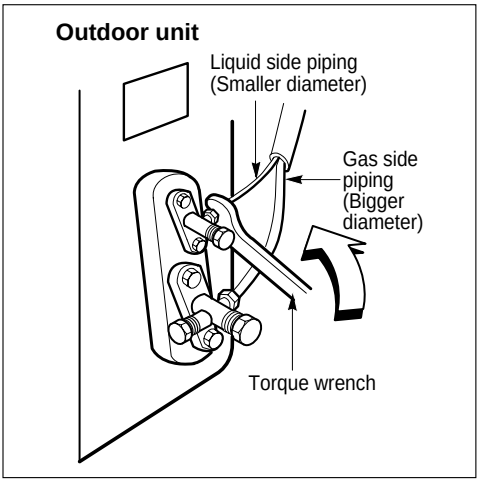

Connecting the Cables

Indoor

1. The control box of indoor unit is on the left side when seen from front side.
2. Connect the cable to the indoor unit by connecting the wires to the terminals on the control board individually according to the outdoor unit connection (Ensure that the color of the wires of the outdoor unit and the terminal no. are same as the those of the indoor unit)

⚠CAUTION

- **The circuit diagram behind the panel is subject to change without notice.**
- **The earth wire should be longer than the common wires.**
- **When installing, refer to the circuit diagram behind the panel front of the indoor unit.**
- **Connect the wires firmly so that they may not be pulled out easily.**
- **Connect the wires according to color codes, referring to the wiring diagram.**

⚠ CAUTION

: If a power plug is not used, provide a circuit breaker between power source and the unit as shown by.

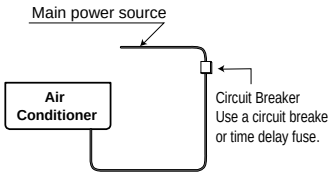

⚠ CAUTION

The power cord connected to the outdoor unit should be complied with the following specifications (Rubber insulation, type H05RN-F approved by HAR or SAA).

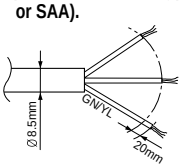

Capacity	3 Phase
36k	2.5mm²
48k	3.5mm²
60k	3.5mm²

The connecting cable connected to the indoor and outdoor unit should be complied with the following specifications (Rubber insulation, type H05RN-F approved by HAR or SAA).

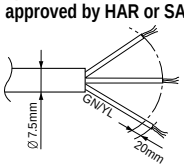

NORMAL CROSS-SECTIONAL AREA 0.75mm² (36K) 1.25mm² (48K/60K)

If the supply cord is damaged, it must be replaced by a special cord or assembly available from the manufacturer or its service agent.

⚠ CAUTION

Make sure that the screws of the terminal are not loose.

Outdoor

1. Remove the control cover from the unit by loosening the screw.
   Connect the wires to the terminals on the control board individually.
2. Secure the cable onto the control board with the cord clamp.
3. Refix the control cover to the original position with the screw.
4. Use a recognized circuit breaker between the power source and the unit.
   A disconnecting device to adequately disconnect all supply lines must be fitted.

Outdoor Unit

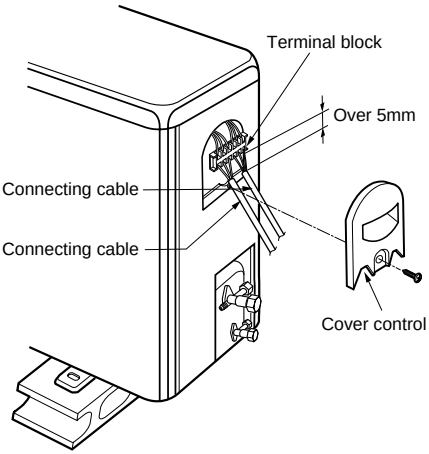

⚠ CAUTION

: According to the confirmation of the above conditions, prepare the wiring as follows.

1. Never fail to have an individual power circuit specifically for the air conditioner. As for the method of wiring, be guided by the circuit diagram posted on the inside of control cover.

2. The screw which fasten the wiring in the casing of electrical fittings are liable to come loose from vibrations to which the unit is subjected during the course of transportation. Check them and make sure that they are all tightly fastened. (If they are loose, it could cause burn-out of the wires.)

3. Check specification of power source.

4. Confirm that electrical capacity is sufficient.

5. See to that the starting voltage is maintained at more than 90 percent of the rated voltage marked on the name plate.

6. Confirm that the cable thickness is as specified in the power source specification. (Particularly note the relation between cable length and thickness.

7. Always install an earth leakage circuit breaker in a wet or moist area.

8. The following would be caused by voltage drop.

• Vibration of a magnetic switch, which will damage the contact point, fuse breaking, disturbance of the normal function of the overload.

9. The means for disconnection from a power supply shall be incorporated in the fixed wiring and have an air gap contact separation of at least 3mm in each active(phase) conductors.

Checking the Drainage

1. Set the air direction louvers up-and-down to the position(horizontally) by hand.

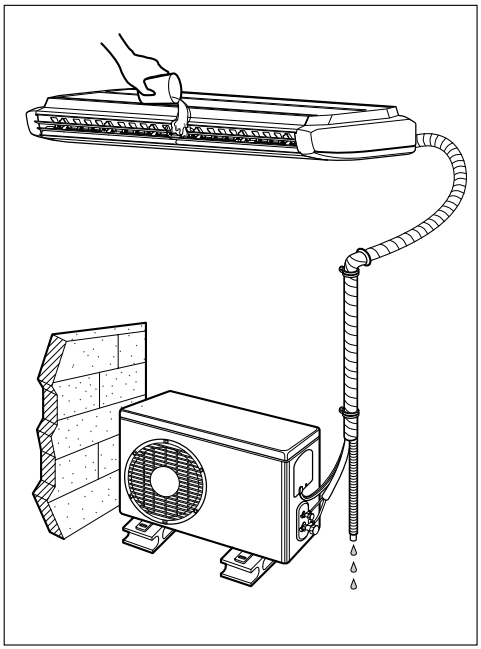

To check the drainage.

1. Pour a glass of water on the evaporator using a kettle.
2. Ensure the water flows through the drain hose of the indoor unit without any leakage and goes out the drain exit.

Drain piping

1. The drain hose should point downward for easy drain flow.

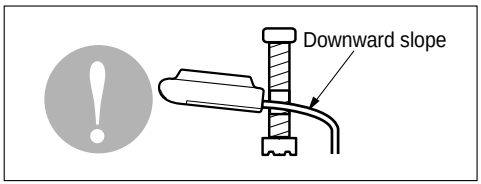

2. Do not make drain piping like the following.

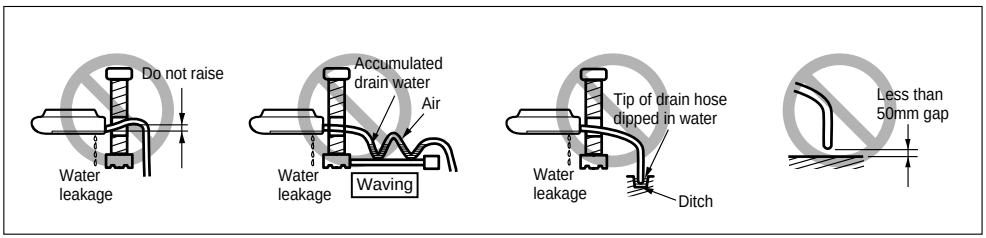

Forming the Piping

Form the piping by wrapping the connecting portion of the indoor unit with insulation material and secure it with two kinds of vinyl tapes.

- If you want to connect an additional drain hose, the end of the drain outlet should be routed above the ground. Secure the drain hose appropriately.

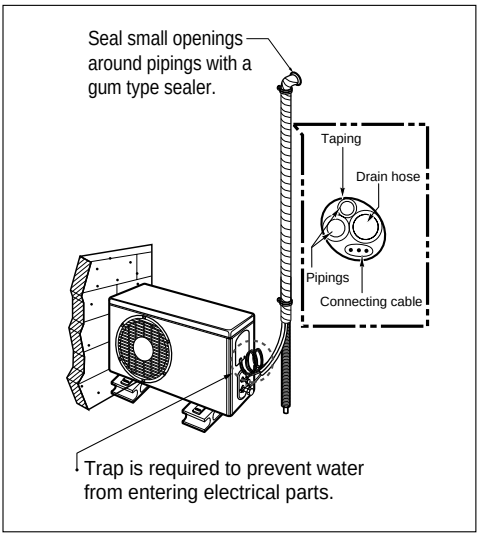

In cases where the outdoor unit is installed below the indoor unit perform the following.

1. Tape the piping, drain hose and connecting cable from down to up.
2. Secure the tapped piping along the exterior wall using saddle or equivalent.

In cases where the outdoor unit is installed above the Indoor unit perform the following.

1. Tape the piping and connecting cable from down to up.
2. Secure the taped piping along the exterior wall. Form a trap to prevent water entering the room.
3. Fix the piping onto the wall by saddle or equivalent.

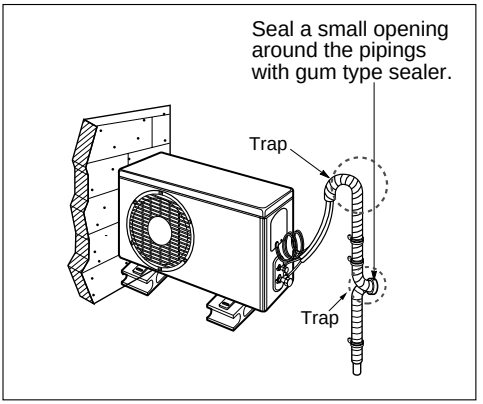

Air Purging

Air purging

The air and moisture remaining in the refrigerant system have undesirable effects as indicated below.

1. Pressure in the system rises.
2. Operating current rises.
3. Cooling(or heating) efficiency drops.
4. Moisture in the refrigerant circuit may freeze and block capillary tubing.
5. Water may lead to corrosion of parts in the refrigeration system.

Therefore, after evacuating the system, take a leak test for the piping and tubing between the indoor and outdoor unit.

Air purging with vacuum pump

1. Check that both liquid and gas pipe between indoor and outdoor have been properly connected.
2. Remove the service valve cap from both the gas and liquid side on the outdoor unit.
3. Confirm that both the liquid and gas side valve are set to the closed position.
4. Connect the manifold valve(with pressure gauge) to the gas pipe side.

⚠CAUTION

: Be sure to use a manifold valve for air purging. If it is not available, use a stop valve for this purpose. The "Hi" knob of the manifold valve must always be kept close.

5. And connect the Nitrogen cylinder to the service port with charge hoses to the manifold gauge.
6. Pressurize the system to no more than 150 P.S.I.G with dry nitrogen gas. Close the nitrogen cylinder valve when it shows reading of 150 P.S.I.G.

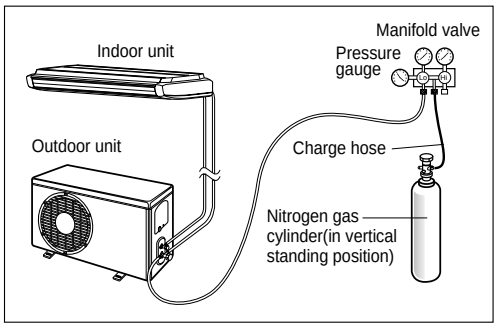

⚠CAUTION

: **To avoid nitrogen entering the refrigerant system in a liquid state, the top of the cylinder must be higher than its bottom when you pressurize the system. Usually, the cylinder is used in a vertical standing position.**

7. Check for leakage with Liquid soap solution. Do the leakage test at all joints of tubing (indoor and outdoor) and on the service valve (both gas and liquid side).

Soap water method

1. Remove the caps from the 2-way and 3-way valves.
2. Remove the service-port cap from the 3-way valve.
3. To open the 2-way valve turn the valve stem counterclockwise approximately 90°, wait for about 2~3 sec, and close it.
4. Apply a soap water or a liquid neutral detergent on the indoor unit connection or outdoor unit connections by a soft brush to check for leakage of the connecting points of the piping.
5. If bubbles come out, the pipes have leakage

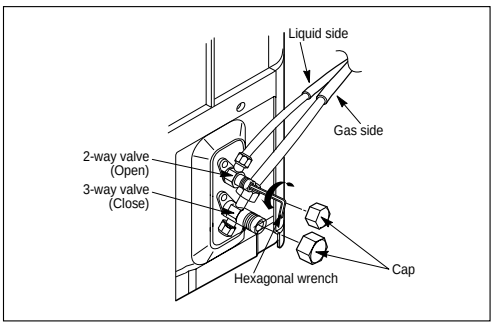

Evacuation

8. If the system is found free from all leakages, relive the nitrogen pressure by loosening the charge hose connector at nitrogen cylinder. Disconnect the hose from cylinder when pressure reaches to normal state.
9. Evacuation: Connect the charge hose end to the vacuum pump and evacuate the connecting of the and indoor unit. Check that the “Lo” knob of manifold is open. Run the vacuum pump. Confirm the "Lo" knob of the manifold valve is open. Then, run the vacuum pump.
   The operation time for evacuation varies with tubing length and capacity of the pump. The following table shows the time required for evacuation.

Required time for evacuation when 30 gal/h vacuum pump is used	
If tubing length is less than 10m (33 ft)	If tubing length is longer than 10m (33 ft)
10 min. or more	15 min. or more

- When the desired vacuum is reached, close the "Lo" knob of the manifold valve and stop the vacuum pump.

10. Once the desired vacuum is created. Disconnect the vacuum pump and open the liquid side valve stem by turning it to counter-clockwise direction with service valve wrench.
11. Open completely the gas side valve buy turning to counter-clockwise with service valve wrench.
12. Remove slowly the charge hose connected to the gas side service port (to release the pressure).
13. Replace back the flare nut and its bonnet on the gas side service port. Fasten the flare nut with adjustable wrench to prevent any leakage from the system.
14. Fasten back the valve cap on both gas and liquid side service valves.

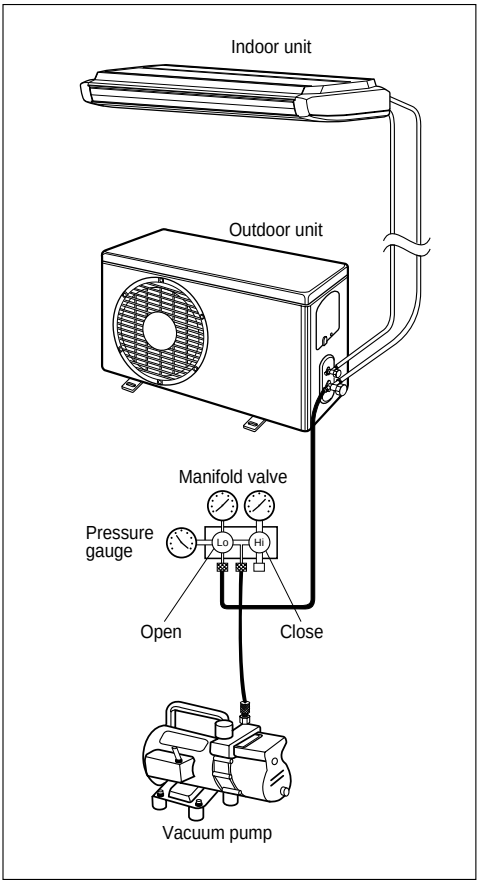

Side Cover Assembly

1. **Cover the sides of main body with side-cover as shown in fig.**

2. **Lift slightly the edge of side-cover with hands to fix the cover properly on the panel.**

3. **Push the side-cover from front side (air outlet side) towards the inlet grill side to lock the side cover on the main body.**

4. **Fasten the securing screw.**

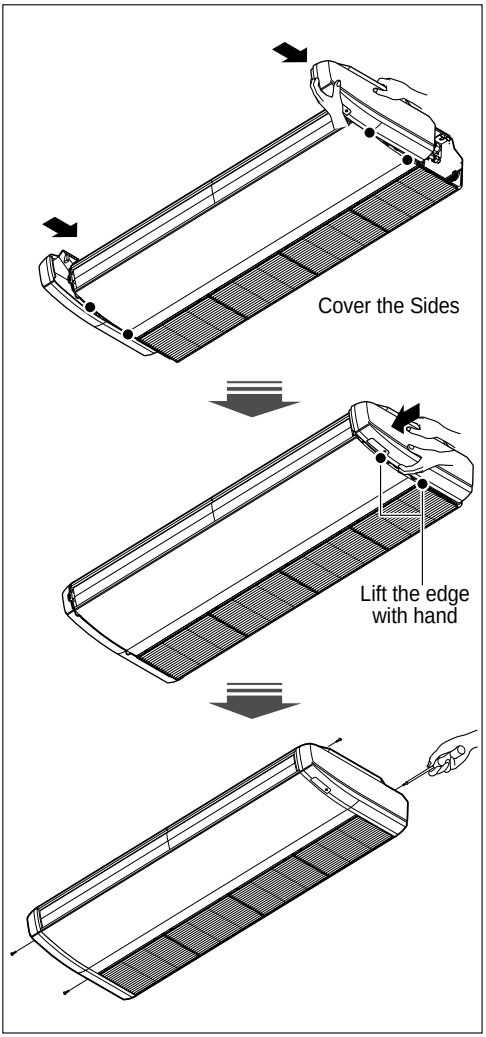

Test Running

1. Check that all tubing and wiring are properly connected.
2. Check that the gas and liquid side service valves are fully open.

Prepare remote controller

1. Remove the battery cover by pulling it according to the arrow direction.
2. Insert new batteries making sure that the (+) and (–) of battery are installed correctly.
3. Reattach the cover by pushing it back into position.

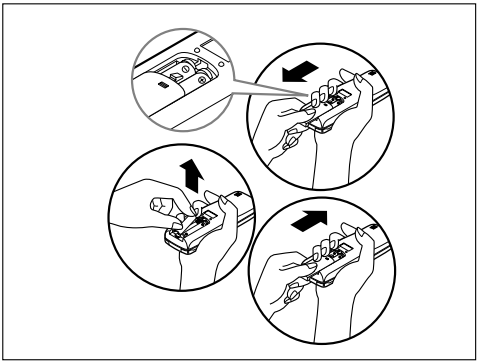

NOTICE

- Use 2 AAA(1.5volt) batteries. Do not use rechargeable batteries.
- Remove the batteries from the remote controller if the system is not used for a long time.

Settlement of outdoor unit

1. Anchor the outdoor unit with a bolt and nut(ø10mm) tightly and horizontally on a concrete or rigid mount.
2. When installing on the wall, roof or rooftop, anchor the mounting base securely with a nail or wire assuming the influence of wind and earthquake.
3. If the vibration of the unit is transmitted to the hose, secure the unit with an anti-vibration rubber.

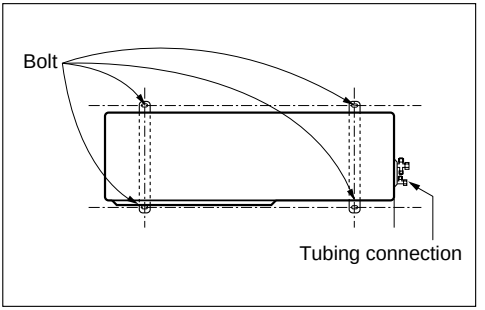

Evaluation of the performance

Operate the unit for 15~20 minutes, then check the system refrigerant charge:

1. Measure the pressure of the gas side service valve.
2. Measure the temperature of the intake and discharge of air.
3. Ensure the difference between the intake temperature and the discharge is more than 8°C
4. For reference; the gas side pressure of optimum condition is as below.(Cooling)

The air conditioner is now ready for use.

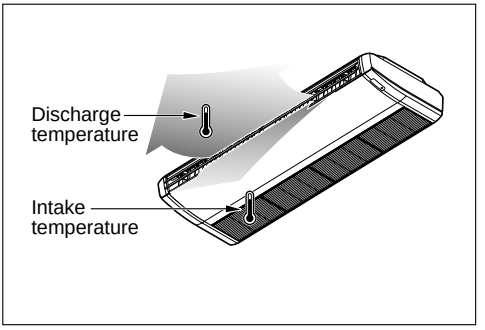

Refrigerant	Outside ambient TEMP.	The pressure of the gas side service valve.
R-22	35°C (95°F)	4~5kg/cm²G(56.8~71.0 P.S.I.G.)
R-410A	35°C (95°F)	8.5~9.5kg/cm²G(120~135 P.S.I.G.)

NOTICE

: If the actual pressure is higher than shown, the system is most likely over-charged, and charge should be removed. If the actual pressure are lower than shown, the system is most likely undercharged, and charge should be added.

PUMP DOWN

This is performed when the unit is relocated or the refrigerant circuit is serviced.

Pump Down means collecting all refrigerant into the outdoor unit without the loss of refrigerant.

⚠CAUTION

: Be sure to perform Pump Down procedure in the cooling mode.

Pump Down Procedure

1. Connect a low-pressure gauge manifold hose to the charge port on the gas side service valve.
2. Open the gas side service valve halfway and purge the air in the manifold hose using the refrigerant.
3. Close the liquid side service valve(all the way).
4. Turn on the unit's operating switch and start the cooling operation.
5. When the low-pressure gauge reading becomes 1 to 0.5kg/cm^2 G(14.2 to 7.1 P.S.I.G.), fully close the gas side valve and then quickly turn off the unit. Now Pump Down procedure is completed, and all refrigerant is collected into the outdoor unit.



P/No.: 3828A30123G