LG

LG Ceiling Duct-Type Air Conditioner

INSTALLATION MANUAL

IMPORTANT

- **Please read this installation manual completely before installing the product.**
- **When the power cord is damaged, replacement work shall be performed by authorized personnel only.**
- **Installation work must be performed in accordance with the national wiring standards by authorized personnel only.**
- **Please retain this installation manual for future reference after reading it thoroughly.**

TABLE OF CONTENTS

Installation Requirements	Required Parts	Required Tools
Safety Precautions.....3		
Introduction 6		
Installation of Indoor, Outdoor Unit.....7	• Four Type “A” screws • Connecting cable	• Level • Screw driver • Electric drill • Hole core drill (ø70mm)
Connecting Pipes to the Indoor Unit.....17	• Pipes: Gas side .....$^{5}/_{8}$", $^{3}/_{4}$" Liquid side .....$^{1}/_{4}$", $^{3}/_{8}$", $^{1}/_{2}$" • Insulated drain hose • Insulation materials	• Flaring Tools set
Connecting Pipes to the Outdoor Unit.....19	• Additional Drain hose (Inner Dia.....25mm)	
Checking the Drainage 19		
Connecting Cables between Indoor Unit and Outdoor Unit.....20		• Screw driver
Air Purging of the Connecting Pipes and the Indoor Unit.....23		• Hexagonal Wrench (4mm/5mm) • Gas-leak Detector
Group Control.....24		
Two Thermistor system 24		
E.S.P.(External Static Pressure) Setting 25		
How to Set E.S.P? 26		
External Static Pressure & air Flow.....27		
Checking the Power Cord 28		
Installation Guide at the Seaside.....29		

Safety Precautions

To prevent injury to the user or other people and property damage, the following instructions must be followed.

■ Incorrect operation due to ignoring instruction will cause harm or damage. The seriousness is classified by the following indications.

⚠WARNING	This symbol indicates the possibility of death or serious injury.
⚠CAUTION	This symbol indicates the possibility of injury or damage.

■ Meanings of symbols used in this manual are as shown below.

⃠	**Be sure not to do.**
!	**Be sure to follow the instruction.**

⚠WARNING

■ Installation

Do not use a defective or underrated circuit breaker. Use this appliance on a dedicated circuit.

- There is risk of fire or electric shock.

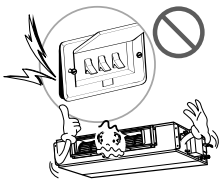

For electrical work, contact the dealer, seller, a qualified electrician, or an Authorized Service Center.

- Do not disassemble or repair the product. There is risk of fire or electric shock.

Always ground the product.

- There is risk of fire or electric shock.

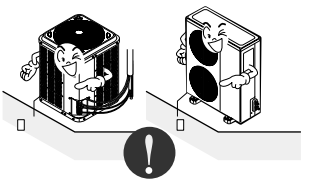

Install the panel and the cover of control box securely.

- There is risk of fire or electric shock.

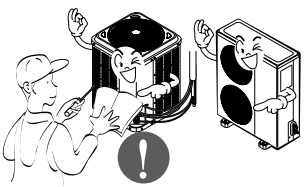

Always install a dedicated circuit and breaker.

- Improper wiring or installation may cause fire or electric shock

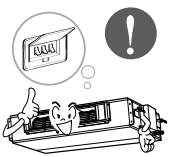

Use the correctly rated breaker or fuse.

- There is risk of fire or electric shock.

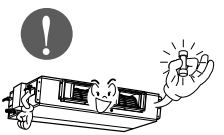

Do not modify or extend the power cable.

- There is risk of fire or electric shock.

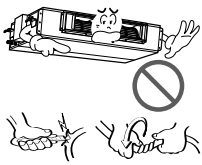

Be cautious when unpacking and installing the product.

- Sharp edges could cause injury. Be especially careful of the case edges and the fins on the condenser and evaporator.

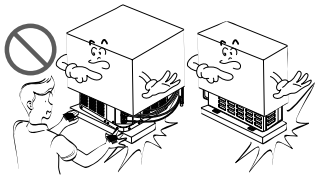

For installation, always contact the dealer or an Authorized Service Center.

- There is risk of fire, electric shock, explosion, or injury.

Do not install the product on a defective installation stand.

- It may cause injury, accident, or damage to the product.

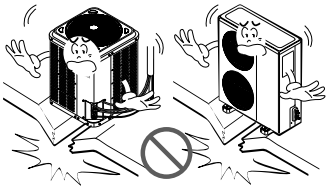

Be sure the installation area does not deteriorate with age.

- If the base collapses, the air conditioner could fall with it, causing property damage, product failure, and personal injury.

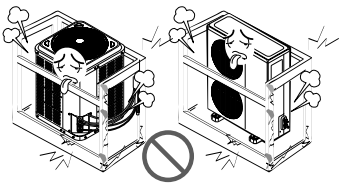

Do not let the air conditioner run for a long time when the humidity is very high and a door or a window is left open.

- Moisture may condense and wet or damage furniture.

■ Operation

Do not store or use flammable gas or combustibles near the product.

- There is risk of fire or failure of product.

⚠ CAUTION

■ Installation

Always check for gas (refrigerant) leakage after installation or repair of product.

• Low refrigerant levels may cause failure of product.

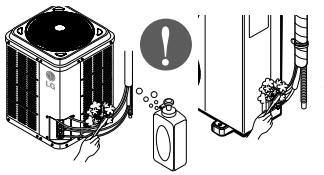

Install the drain hose to ensure that water is drained away properly.

• A bad connection may cause water leakage.

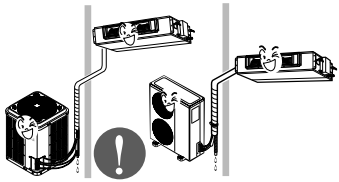

Keep level even when installing the product.

• To avoid vibration or water leakage.

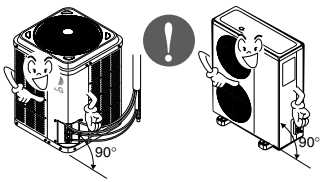

Do not install the product where the noise or hot air from the outdoor unit could damage the neighborhoods.

• It may cause a problem for your neighbors.

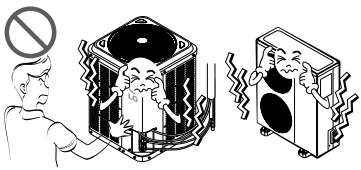

Use two or more people to lift and transport the product.

• Avoid personal injury.

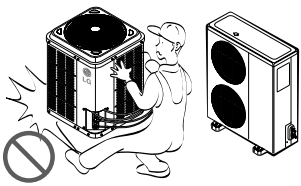

Do not install the product where it will be exposed to sea wind (salt spray) directly.

• It may cause corrosion on the product. Corrosion, particularly on the condenser and evaporator fins, could cause product malfunction or inefficient operation.

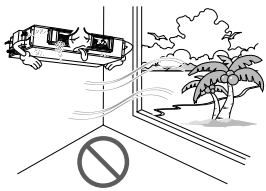

Introduction

Symbols Used in this Manual

This symbol alerts you to the risk of electric shock.

This symbol alerts you to hazards that could cause harm to the air conditioner.

NOTICE **This symbol indicates special notes.**

Features

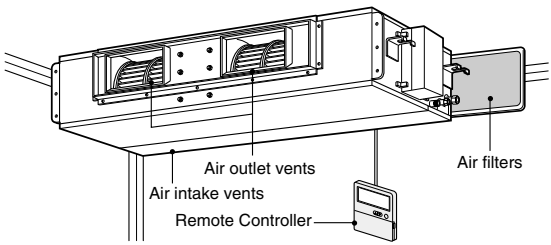

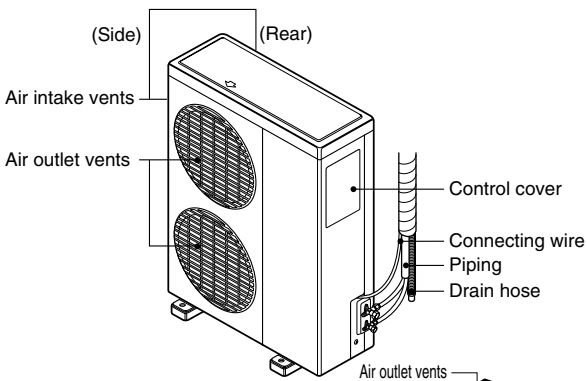

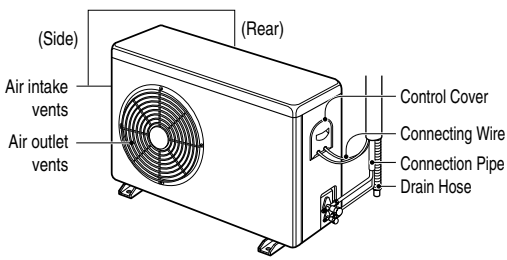

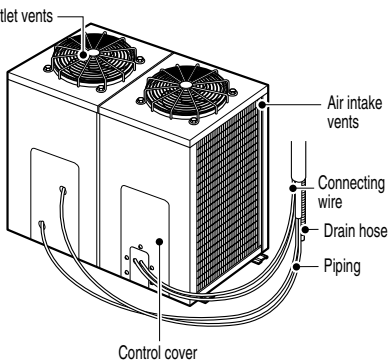

Installation of Indoor, Outdoor Unit

Selection of the best location

Indoor unit

Install the air conditioner in the location that satisfies the following conditions.

- The place shall easily bear a load exceeding four times the indoor unit's weight.
- The place shall be able to inspect the unit as the figure.
- The place where the unit shall be leveled.
- The place shall allow easy water drainage.(Suitable dimension "H" is necessary to get a slope to drain as figure.)
- The place shall easily connect with the outdoor unit.
- The place where the unit is not affected by an electrical noise.
- The place where air circulation in the room will be good .
- There should not be any heat source or steam near the unit

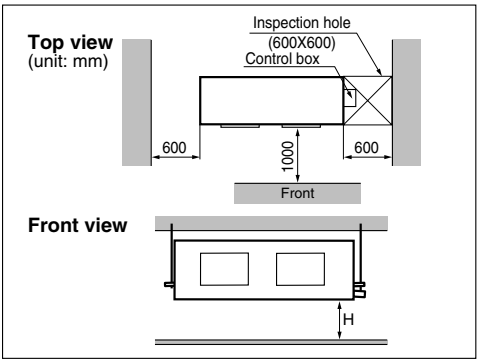

Outdoor unit

- If an awning is built over the unit to prevent direct sunlight or rain exposure, be careful that heat radiation from the condenser is not restricted.
- There should not be any animals or plants which could be affected by hot air discharged.
- Ensure the spaces indicated by arrows from the wall, ceiling, fence or other obstacles.

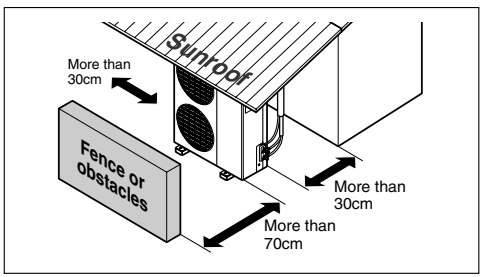

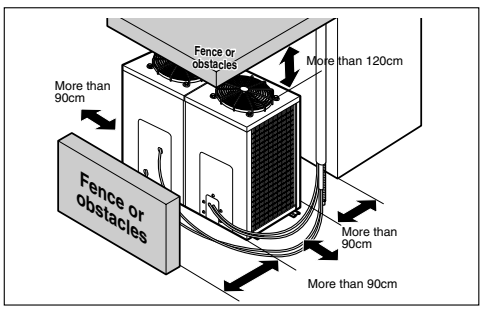

Piping length and the elevation

Capacity	Pipe Size (Diameter:Ø)		Length A(m)		Elevation B(m)		*Additional refrigerant(g/m)
	Gas	Liquid	Standard	Max.	Standard	Max.	
30kBtu/h	5/8"	1/4"	7.5	50	5	30	45
48kBtu/h	3/4"	1/2"	7.5	50	5	30	70
60kBtu/h	3/4"	1/2"	7.5	50	5	30	80

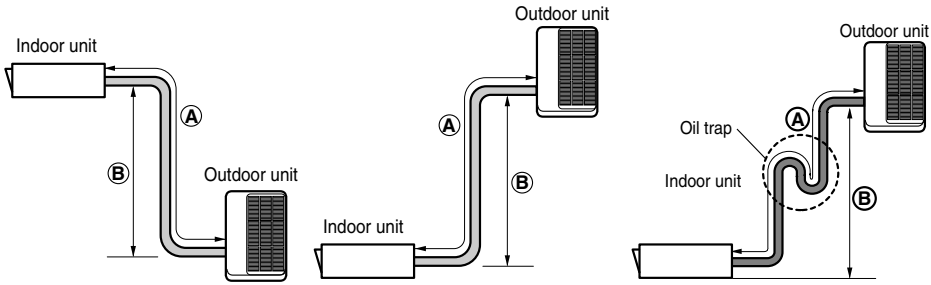

If piping length is more than 5m

CAUTION:

- **If 60k Model is installed at a distance of 15m, 675g of refrigerant should be added (15-7.5) x 70g = 525g**
- **Capacity is based on standard length and maximun allowance length is on the basis of reliability.**
- **Improper refrigerant charge may result in abnormal cycle.**
- **Oil trap should be installed every 10 meters.**

Indoor unit installation

Installation of Unit

Install the unit above the ceiling correctly.

CASE 1

POSITION OF SUSPENSION BOLT

- Apply a joint-canvas between the unit and duct to absorb unnecessary vibration.
- Apply a filter Accessory at air return hole.

(Unit:mm)

Dimension / Capacity	A	B	C	D	E	F	(G)	H	I
30k Btu/h	1232	1180	355	45.5	450	30	87	830	186
48k/60k Btu/h	1282	1230	477	56	590	30	120	1006	294

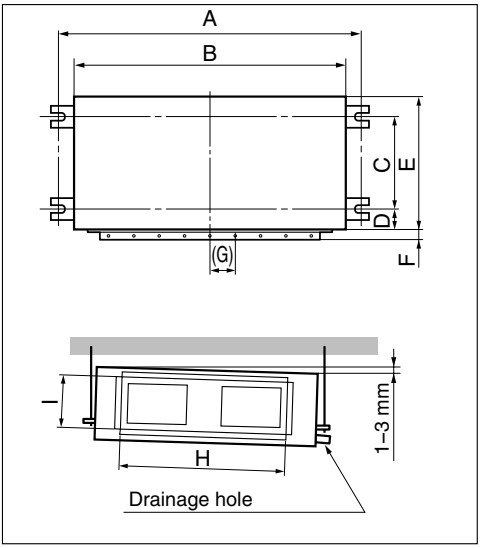

CASE 2

POSITION OF CONSOLE BOLT

- Install the unit leaning to a drainage hole side as a figure for easy water drainage.

- A place where the unit will be leveled and that can support the weight of the unit.
- A place where the unit can withstand its vibration.
- A place where service can be easily performed.

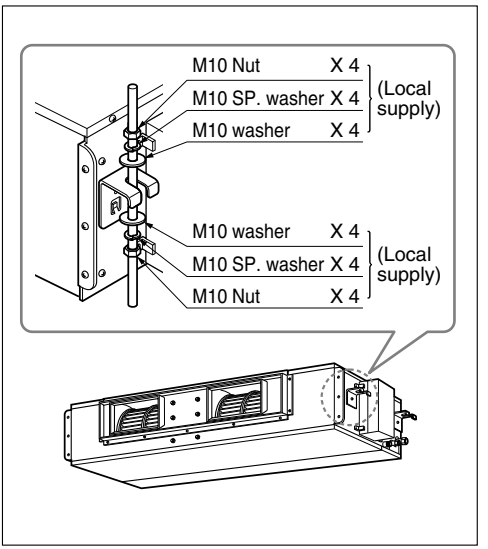

- Select and mark the position for fixing bolts.
- Drill the hole for set anchor on the face of ceiling.

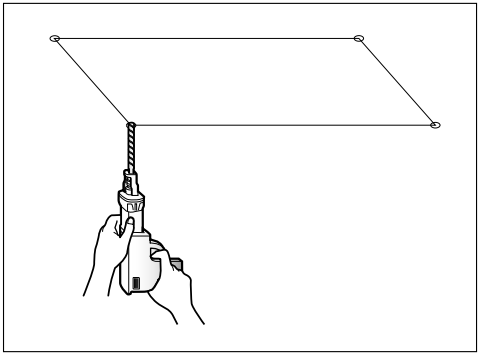

- Insert the set anchor and washer onto the suspension bolts for locking the suspension bolts on the ceiling.
- Mount the suspension bolts to the set anchor firmly.
- Secure the installation plates onto the suspension bolts (adjust level roughly) using nuts, washers and spring washers.

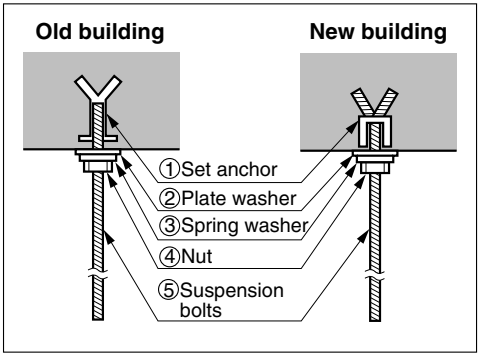

CAUTION:
Tighten the nut and bolt to prevent unit falling.

CAUTION

1. Install declination of the indoor unit is very important for the drain of the duct type air conditioner.
2. Minimum thickness of the insulation for the connecting pipe shall be 5mm.

Front of view

- The unit must be horizontal or declined to the drain hose connected when finished installation.

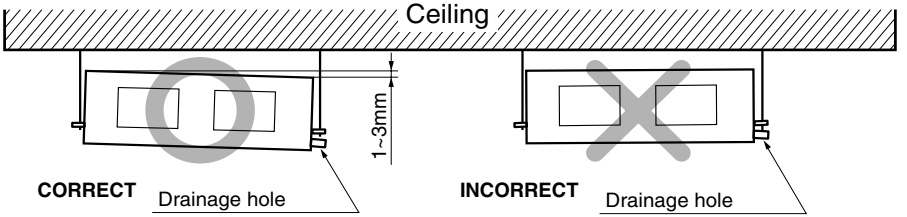

CAUTION FOR GRADIENT OF UNIT AND DRAIN PIPING

Lay the drain hose with a downward inclination so water will drain out.

- Always lay the drain with downward inclination (1/50 to 1/100).
  Prevent any upward flow or reverse flow in any part.
- 5mm or thicker formed thermal insulator shall always be provided for the drain pipe.

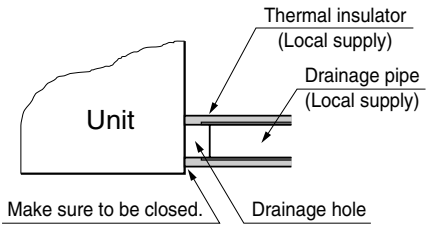

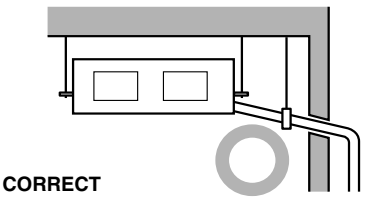

- Upward routing not allowed

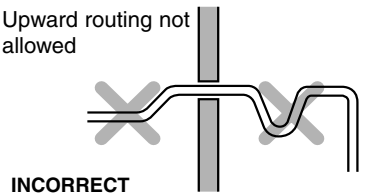

- Install the P-Trap (or U-Trap) to prevent a water leakage caused by the blocking of intake air filter.

Applied U-Trap Dimension

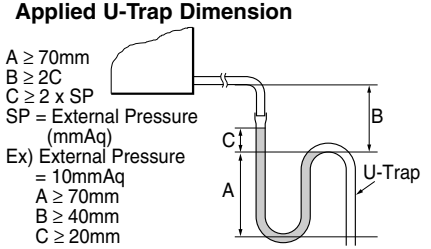

- Drill the piping hole with 70mm dia, hole core drill.
- Piping hole should be slightly slant to the outdoor side.

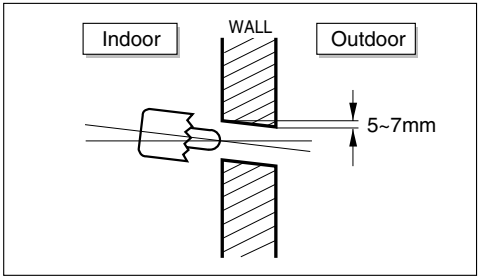

INSULATION, OTHERS

Insulate the joint and tubes completely.

THERMAL INSULATION

All thermal insulation must comply with local requirement.

INDOOR UNIT

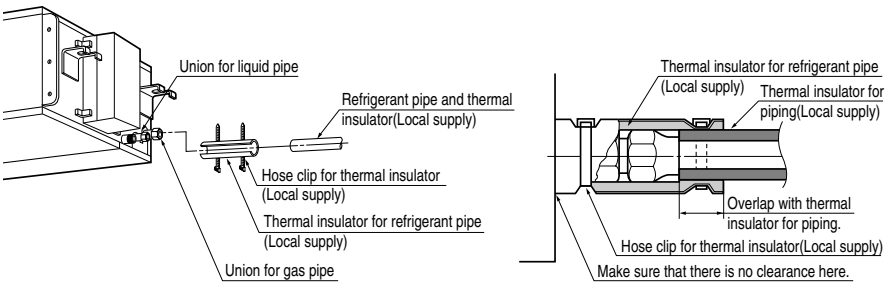

REFRIGERANT PIPE

- Insulate and tape the gas piping.

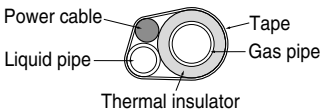

TEST AND CHECK

■ *After all workings are finished, check the working and operation.*

- Air distribution ——— Is the air circulation good?
- Drain ——— Is the drainage smoothly and no sweating?
- Gas leakage ——— Is the piping connection correctly?
- Wiring ——— Is the wiring connection correctly?
- Lock-bolt ——— Is the lock-bolt of compressor loosened?

INSTALLATION OF REMOTE CONTROL BOX

Install the remote control box and cord correctly.

POINT OF REMOTE CONTROLLER INSTALLATION

- Although the room temperature sensor is in the indoor unit, the remote control box should be installed in such places away from direct sunlight and high humidity.

INSTALLATION OF THE REMOTE CONTROL BOX

- Select places that is not splashed by water.
- Select control position after receiving customer approval.
- The room temperature sensor of the thermostat for temperature control is built in the indoor unit.
- This remote controller equipped with liquid crystal display. If this position is higher or lower, display is difficult to see. (The standard height is 1.2~1.5m high)

ROUTING OF THE REMOTE CONTROL CORD

- Keep the remote control cord away from the refrigerant piping and the drain piping.
- To protect the remote control cord from electrical noise, place the cord at least 5cm away from other power cables. (Audio equipment, Television set, etc)
- If the remote control cord is secured to a wall, provide a trap at the top of the cord to prevent water droplets from running.

ELECTRICAL WIRING TO THE INDOOR UNIT

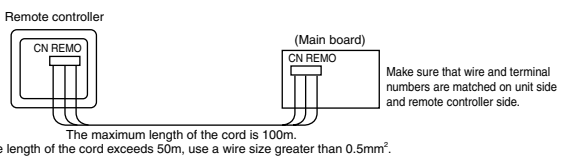

DISASSEMBLING OF THE REMOTE CONTROLLER

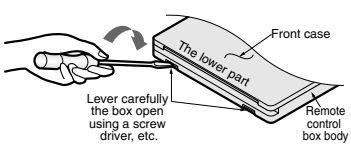

WHEN THE REMOTE CONTROL BOX IS INSTALLED WITH THE CORD BURIED.

PROCEDURE OF INSTALLATION

1. Fix the under plate on the switch box by screws(Local supply). In this case, fit the under plate on the wall, and be careful of deformation.
2. Receive the remote control cord in the switch box.
3. Hook the remote control unit on the under plate.

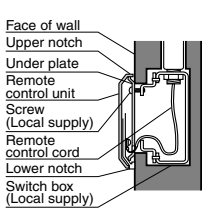

WHEN THE REMOTE CONTROL BOX IS INSTALLED WITH THE CORD EXPOSED.

PROCEDURE OF INSTALLATION

1. Fix the under plate on the wall by self tapping screws (accessory).
2. Make a slit (Part A) at the top side of the remote control box by nipper.
3. Rout the cord as shown in the following figure. In this case, push the cord into the around of case(Part B).
4. Hook the remote control unit on the under plate.

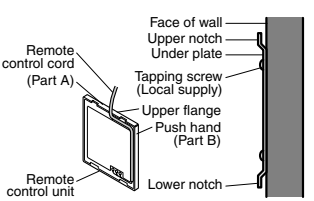

FIXING OF REMOTE CONTROL CORD

1. Fix the cord clamps on the wall by ø3 tapping screws(Local supply).
2. Fix the remote control cord.

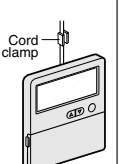

WIERED REMOTE CONTROLLER INSTALLATION

- Since the room temperature sensor is in the remote controller, the remote controller box should be installed in a place away from direct sunlight, high humidity and direct supply of cold air to maintain proper space temperature.
  Install the remote controller about 5ft(1.5m) above the floor in an area with good air circulation at an average temperature.

Do not install the remote controller where it can be affected by:

- Drafts, or dead spots behind doors and in corners.
- Hot or cold air from ducts.
- Radiant heat from sun or appliances.
- Concealed pipes and chimneys.
- Uncontrolled areas such as an outside wall behind the remote controller.
- This remote controller is equipped with a seven segment LED. display. For proper display of the remote controller LED's, the remote controller should be installed properly as shown in Fig.1.
  (The standard height is 1.2~1.5 m from floor level.)

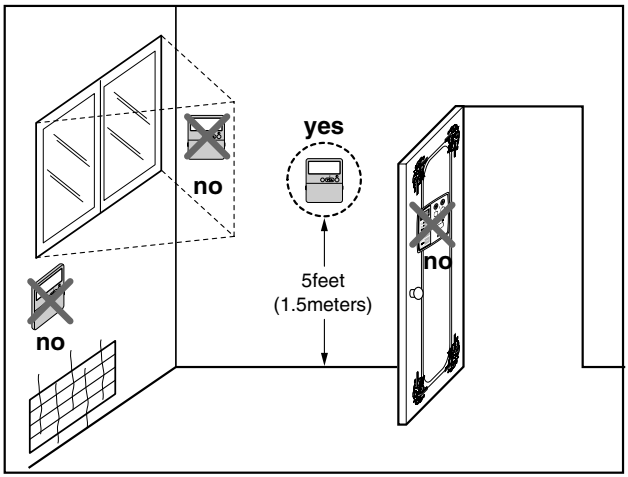

Fig.1 Typical locations for remote controller

REFRIGERANT PIPING

Perform the work according to the Service Manual or Installation Guide.

- Use two spanners when connecting the refrigerant pipe to the unit.
- Make a bend with a radius as large as possible.
- Perform air purge with R-22 or vacuum drying.
- When piping work is finished, check all joints.

Capacity	Additional refrigerant(g/m)
30kBtu/h	45
48kBtu/h	70
60kBtu/h	80

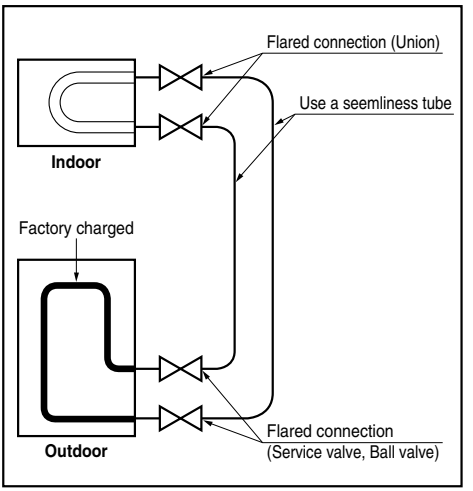

INSTALLATION OF OUT DOOR UNIT

Select a location that satisfies the following conditions. Install the unit firmly in place.

■ **Select the following location**

- A place where the air conditioner can get good ventilation.
- A place where it shall not annoy the neighbors.
- A place where the unit shall be leveled and that can support the weight of unit and withstand its vibrations.

■ **Keep a maintenance space**

*** One side must be 90Cm for service.**
Two of the remaining three sides may be 30Cm.

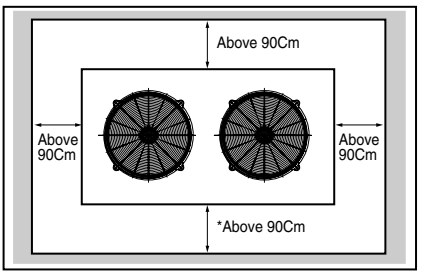

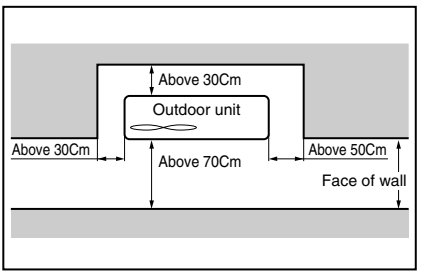

ELECTRICAL WIRING

Perform the electrical wiring work according to the electrical wiring connection.

- All wiring must comply with local requirements.
- Select a power source that is capable of supplying the current required by the air conditioner.
- Use a recognized circuit breaker between the power source and the unit. A disconnection device to adequately disconnect all supply lines must be fitted.
- Capacity of circuit breaker

Capacity	1 Phase	3 Phase
36kBtu/h	25A	-
48kBtu/h	-	25A
60kBtu/h	-	30A

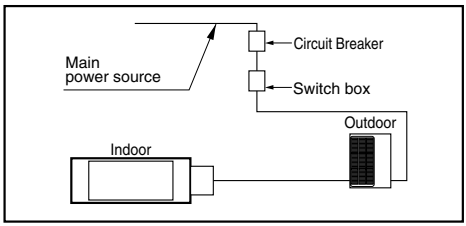

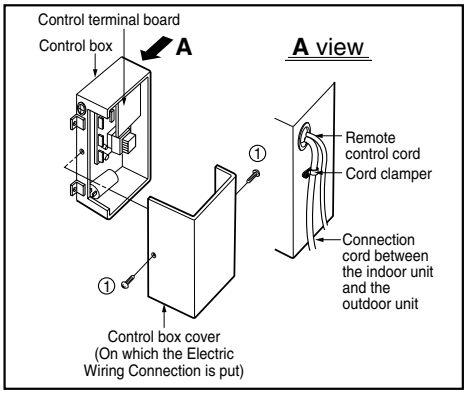

WIRING CONNECTION

Indoor unit

- Remove the control box cover for electrical connection between the indoor and outdoor unit. (Remove crews ①.)
- Use the cord clamper to fix the cord.

Outdoor unit

- Remove the control cover for wiring connection.
- Use the cord clamper to fix the cord.
- Earthing work
  - Case 1 : Terminal block of Outdoor Unit have ⏚ mark.

    Connect the cable of diameter 1.6mm² or more, to the earthing terminal provided in the control box and do earthing.
  - Case 2 : Terminal block of Outdoor Unit don't have ⏚ mark.

    Connect the cable of diameter 1.6mm² or more, to the panel of control box, marked as ⏚ and fasten with earth screw.

※ **Please check !!**

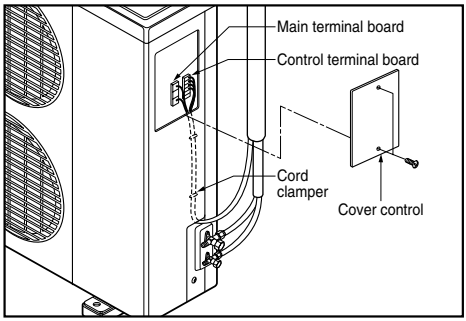

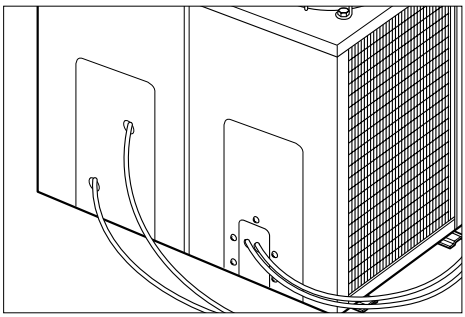

Connecting Pipes to the Indoor Unit

Preparation of Piping

Main cause of gas leakage is defect in flaring work. Carry out correct flaring work in the following procedure.

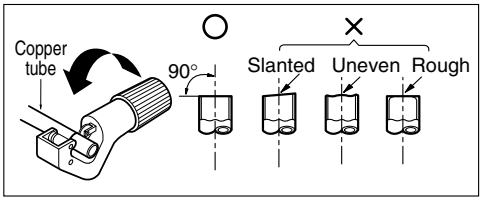

Cut the pipes and the cable.

- Use the accessory piping kit or the pipes purchased locally.
- Measure the distance between the indoor and the outdoor unit.
- Cut the pipes a little longer than measured distance.
- Cut the cable 1.5m longer than the pipe length.

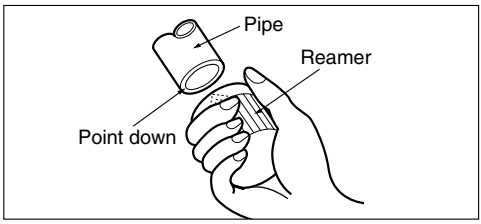

Burrs removal

- Completely remove all burrs from the cut cross section of pipe/tube.
- Put the end of the copper tube/pipe to downward direction as you remove burrs in order to avoid to let burrs drop in the tubing.

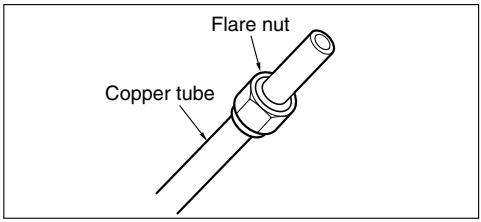

Putting nut on

- Remove flare nuts attached to indoor and outdoor units, than put them on pipe/tube having completed burr removal.
  (Not possible to put them on after flaring work)

Flaring work

- Carry out flaring work using flaring tool as shown below.

Outside Diameter	"A"
6.35(1/4")	1.1~1.3
9.52(3/8")	1.5~1.7
12.70(1/2")	1.6~1.8
15.88(5/8")	1.6~1.8
19.05(3/4")	1.9~2.1

Firmly hold copper tube in a bar(or die) as indicated dimension in the table above.

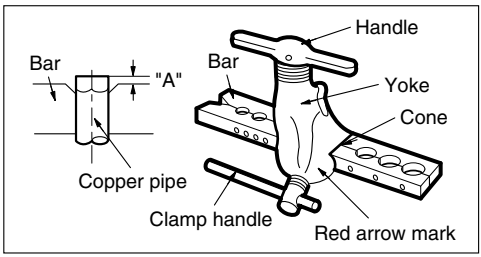

Check

- Compare the flared work with figure.
- If flare is noted to be defective, cut off the flared section and do flaring work again.

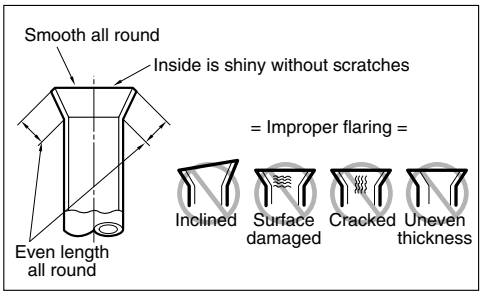

Pipe bending

Annealed copper pipe with small diameter (ø6.35 or ø9.52) can be easily bent manually. In this case, secure large R(radius) for the bend section and gradually bend pipe. If annealed copper pipe is large in diameter (ø15.88 or ø19.05), bend pipe with bender. Use bender appropriate for the pipe diameter.

Brazing

In refrigerant piping, bending (in particular, acute bending) must be minimized to reduce piping resistance. Bending is, however, necessary in some places by virtue of the installation position of devices auxiliary to the packaged air conditioner, or of the building structure, piping distance or finishing appearance. If a more acute bend is required than that attainable by pipe bender, perform brazing using ready-made elbow. Aside from this function, brazing also serves to connect straight pipes, generally using ready-made sockets. While brazing, protect piping against heat with wet cloth to avoid damaging valve packing or burning thermal insulator with burner heat. While brazing, blow inert gas (nitrogen gas or carbonic gas) to prevent formation of oxidation film in copper piping; otherwise, the refrigerant circuit will clog. The blowing of nitrogen gas (or carbonic gas) through 3-way valves is described in the following:

Refrigerant piping(Flare piping)

When connecting piping, be sure to keep piping dry(keep piping away from water), clean (keep piping away from dust) and airtight (avoid refrigerant leakage).
When connecting piping on rainy days or making a through-hole in wall, take due care to prevent water or plaster from entering piping.

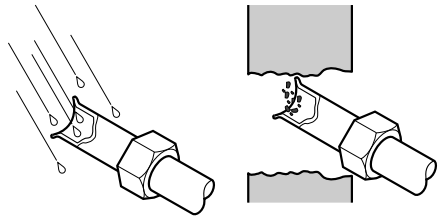

CAUTION:

- **This procedure is designed to prevent formation of oxidation film by filling piping with inert gas. Note that excessive gas pressure will generate pinholes at brazed points.**
  (Nitrogen gas: Supply pressure 0.05~0.1kg/cm^{2}G)
- **When supplying inert gas, be sure to open one end of piping.**

Connecting Pipes to the Outdoor Unit

Connecting the pipes to the Outdoor unit

- Align the center of the pipings and sufficiently tighten the flare nut with fingers.
- Finally, tighten the flare nut with torque wrench until the wrench clicks.
  - When tightening the flare nut with torque wrench, ensure the direction for tightening follows the arrow on the wrench.

Pipe size	kgf·m	N·m
6.35(1/4")	1.8~2.5	14~18
9.52(3/8")	3.4~4.2	36~42
12.70(1/2")	5.5~6.6	49~61
15.88(5/8")	6.3~8.2	68~82
19.05(3/4")	9.9~12.1	100~120

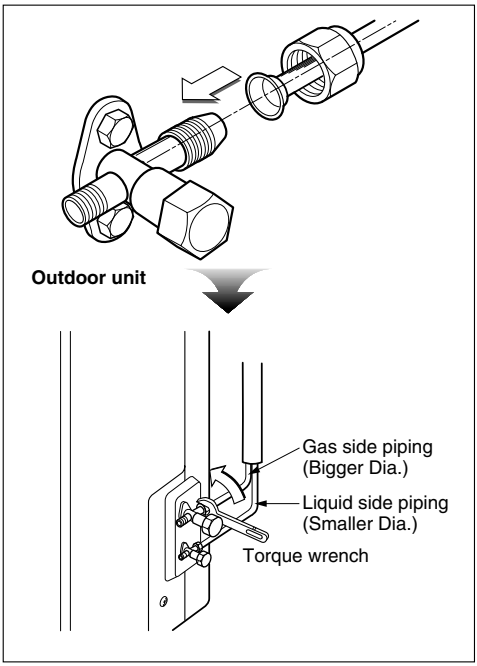

Checking the Drainage

Checking the Drainage

- Remove the Air Filter.

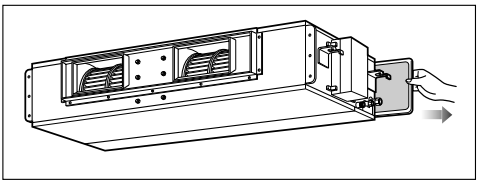

- Check the drainage.
  - Spray one or two glasses of water upon the evaporator.
  - Ensure that water flows drain hose of indoor unit without any leakage.

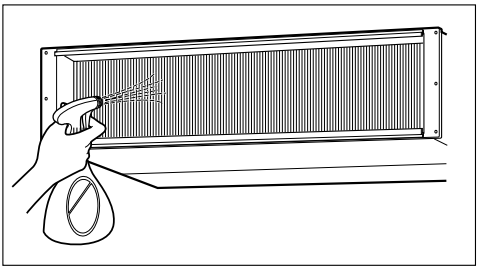

Connecting Cables between Indoor Unit and Outdoor Unit

Connecting cables to the Indoor Unit

■ Connect the wires to the terminals on the control board individually according to the outdoor unit connection.
- Ensure that the color of the wires of outdoor unit and the terminal No. are the same as those of indoor unit respectively

■ 30kBtu/h

• Cooling only type

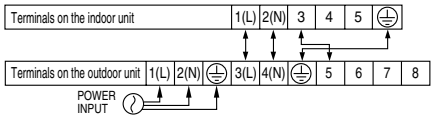

(220-240V~)

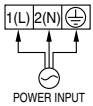

• Cooling & Heating type

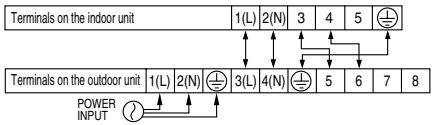

■ 48/60kBtu/h

• Cooling only type

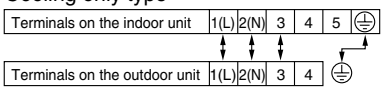

(380-415V3N~)

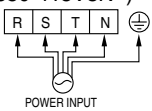

• Cooling & Heating type

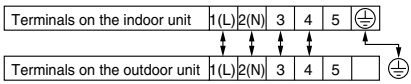

CAUTION

The power cord connected to the outdoor unit should be complied with the following specifications (Rubber insulation, type H05RN-F approved by HAR or SAA).

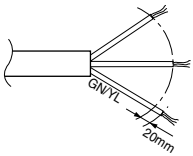

NORMAL CROSS-SECTIONAL AREA

Capacity	1 Phase	3 Phase
36kBtu/h	3.5mm²	-
48kBtu/h	-	5.5mm²
60kBtu/h	-	5.5mm²

The connecting cable connected to the indoor and outdoor unit should be complied with the following specifications (Rubber insulation, type H05RN-F approved by HAR or SAA).

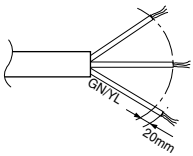

NORMAL CROSS-SECTIONAL AREA 1.25mm²

If the supply cord is damaged, it must be replaced by a special cord or assembly availible from the manufacturer of its service agent.

CAUTION: Make sure that the screws of the terminal fixed tightly.

Clamping of cabls

- Arrange 2 power cables on the control panel.
- First, fasten the steel clamp with a screw to the inner boss of control panel.
- For the cooling model, fix the other side of the clamp with a screw strongly.
  For the heat pump model, put the 0.75mm² cable(thinner cable) on the clamp and tighten it with a plastic clamp to the other boss of the control panel.
- In Australia, the length of power supply cord measured from the entry of the power supply cord to the middle of live pin on the power plug should be over 1.8m.

Connecting the cable to the Outdoor Unit

- Remove the Cover control from the unit by loosening a screw.
  Connect the wires to the terminals on the control board individually as following.
- Secure the cable onto the control board with the holder (clamper).
- Refix the cover control to the original position with the screw.

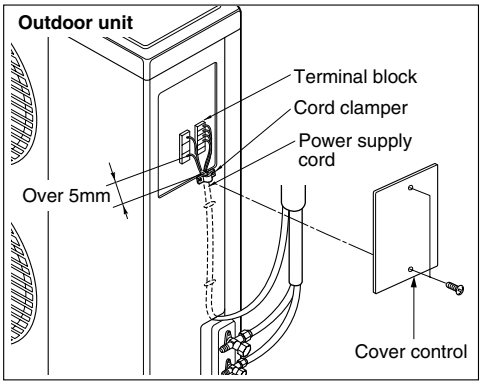

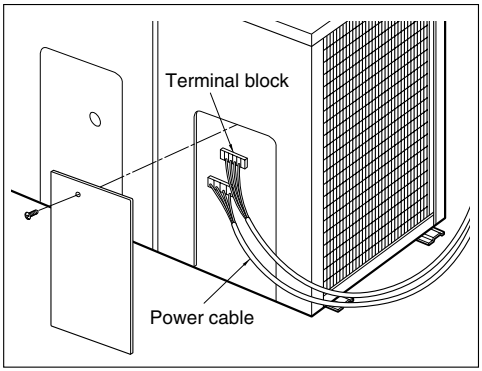

CAUTION: After the confirmation of the above conditions, prepare the wiring as follows:

1) Never fail to have an individual power specialized for the air conditioner. As for the method of wiring, be guided by the circuit diagram pasted on the inside of control box cover.

2) Provide a circuit breaker switch between power source and the unit.

3) The screw which fasten the wiring in the casing of electrical fittings are liable to come loose from vibrations to which the unit is subjected during the course of transportation. Check them and make sure that they are all tightly fastened. (If they are loose, it could give rise to burn-out of the wires.)

4) Specification of power source

5) Confirm that electrical capacity is sufficient.

6) Be sure that the starting voltage is maintained at more than 90 percent of the rated voltage marked on the name plate.

7) Confirm that the cable thickness is as specified in the power sources specification. (Particularly note the relation between cable length and thickness.)

8) Never fail to equip a leakage breaker where it is wet or moist.

9) The following troubles would be caused by voltage drop-down.

- Vibration of a magnetic switch, damage on the contact point there of, fuse breaking, disturbance to the normal function of a overload protection device.
- Proper starting power is not given to the compressor.

Form the pipings

- Wrap the connecting portion of indoor unit with the Insulation material and secure it with two Plastic Bands. (for the right pipings)
  - If you want to connect an additional drain hose, the end of the drain-outlet should keep distance from the ground. (Do not dip it into water, and fix it on the wall to avoid swinging in the wind.)

In case of the Outdoor unit being installed below position of the Indoor unit.

- Tape the Pipings, drain hose and Connecting Cable from bottom to top.
- Form the pipings gathered by taping along the exterior wall and fix it onto the wall by saddle or equivalent.

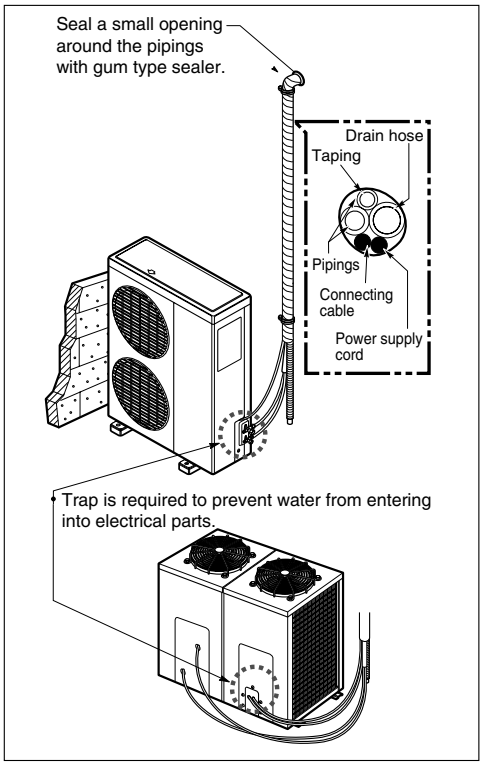

In case of the Outdoor Unit being installed above position of the Indoor Unit.

- Tape the Pipings and Connecting cable from bottom to top.
- Form the pipings gathered by taping along the exterior wall, and make the trap prevent water from entering into the room.
- Fix the pipings onto the wall by saddle or equivalent.

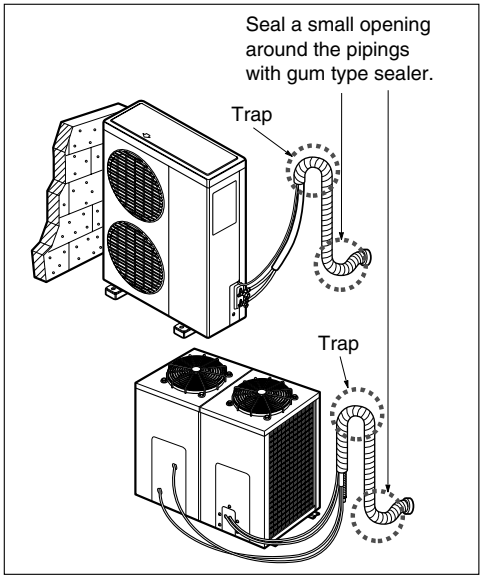

Air Purging of the Connecting Pipes and the Indoor Unit

The air which contains moisture remaining in the refrigeration cycle may cause a malfunction on the compressor.

1. Confirm that both the liquid side valve and the gas side valve are set to the closed position.
2. After connecting the piping, check the joints for gas leakage with gas leak detector.
3. Remove the service port nut, and connect the gauge manifold and the vacuum pump to the service port by the charge hose.
4. Vacuum the indoor unit and the connecting pipes until the pressure in them lowers to below -76cmHg.
5. Remove the valve stem nuts, and fully open the stems of the 2-way and 3-way valves with a hexagon wrench.
6. Tighten the valve stem nuts of the 2-way valve and 3-way valve.
7. Disconnect the charge hose and fit the nut to the service port.
   (Tightening torque: 1.8kg.m)

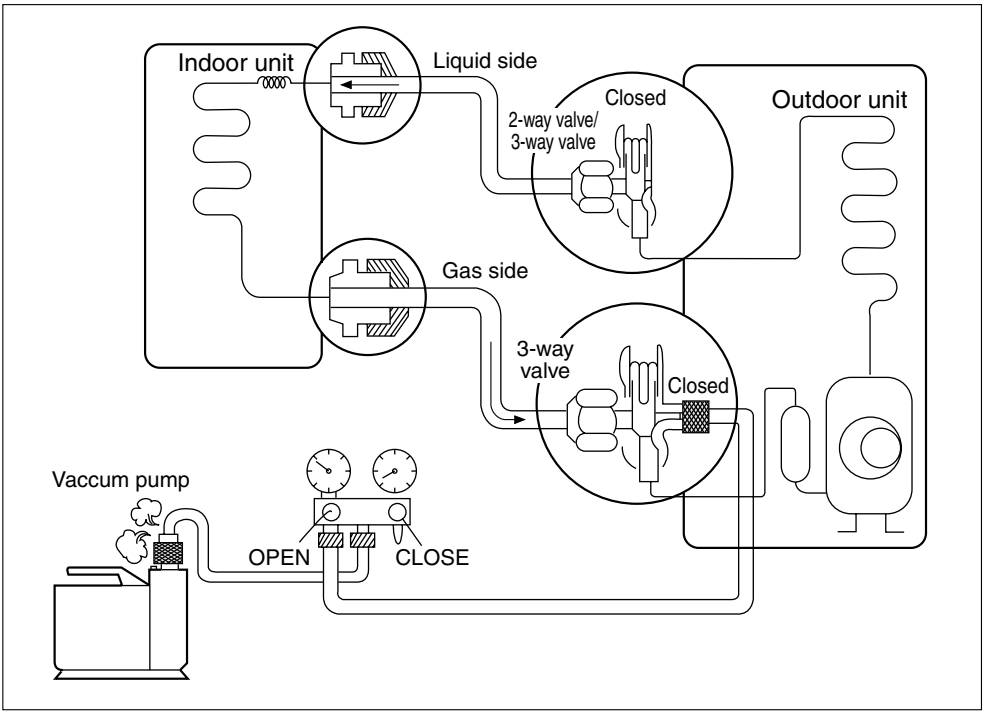

Group Control

It operates maximum 16 Units by only one Wired Remote Controller, and each Unit starts sequentially to prevent overcurrent.

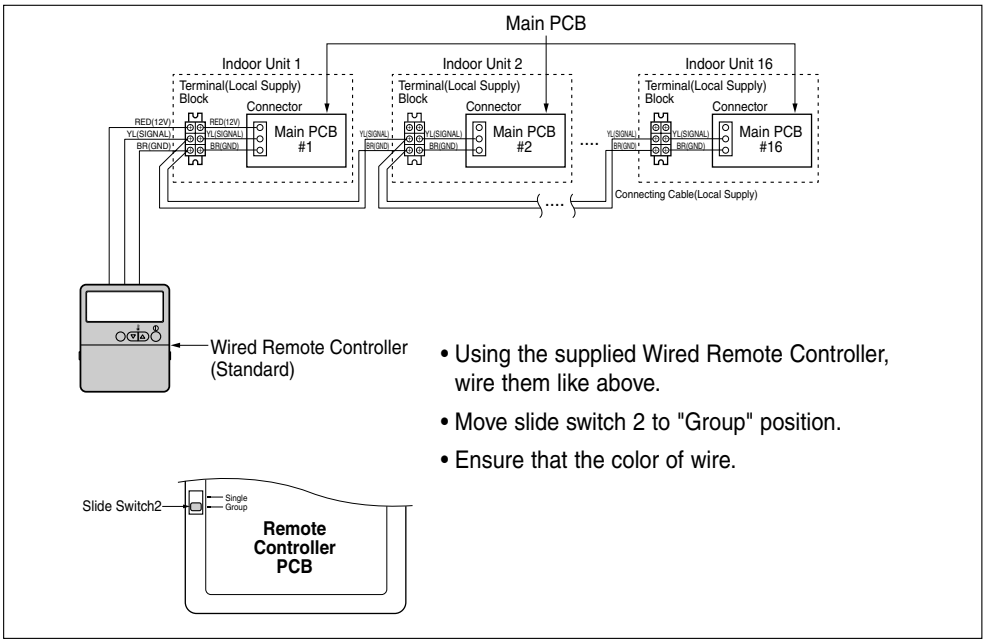

- Using the supplied Wired Remote Controller, wire them like above.
- Move slide switch 2 to "Group" position.
- Ensure that the color of wire.

Two Thermistor system

- Open the rear cover of Remote Controller to set up the mode.
- Selectable options are three as follows.
  - Remo: Sensing the room Temperature.
  - Indoor Unit: Sensing the intake air into indoor Unit.
  - 2 TH: Sensing the lower temperature of the two thermistors.
- To set up the mode, adjust the slide switch to desired mode position on installing.

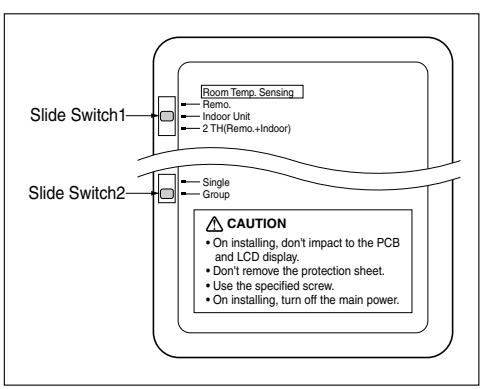

E.S.P.(External Static Pressure) Setting

Open the rear cover of the wired remote-controller to set the mode.
Select one of three selectable modes as follows.

■ Without Zone System

1. Position V-H, F-H:
   • This position sets the maximum E.S.P as a default set.
2. Position V-L:
   • This position sets the minimum E.S.P as a default set.

■ With Zone System

1. Position V-H:
   • Maximum E.S.P setting & Fan speed is varied according to the state of dampers by micom.
2. Position F-H:
   • Maximum E.S.P setting & Fan speed doesn't vary according to the opening & Closing of dampers.
3. Position V-L:
   • Minimum E.S.P setting & Fan speed is varied according to the state of dampers by micom.

*Maximum: 30k-10mmAq 48/60k-15mmAq

Minimum: All-0mmAq

Move the slide switch to set position.

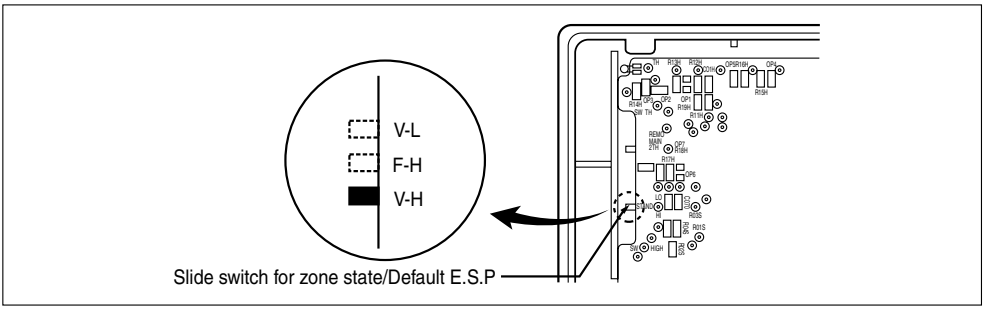

Close the rear cover and check if it works normally.

CAUTION:
• Select the position after checking duct work and E.S.P of the unit.
• Maunfactured in the position F-H.

How to Set E.S.P?

Procedure of RPM change:

Ex) External Static Pressure is 10mmAq for Model Name "LB-H608RSS0"

• To protect the unit, compressor is designed to be off during E.S.P. setting.

1 Push the "On/Off" button.
The unit will start.

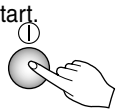

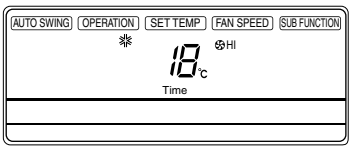

2 Push the "Timer" and "Wind" button simultaneously for more then 3 seconds.

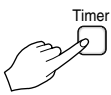

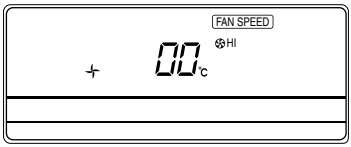

3 Push the "Up" of "Down" button for E.S.P adjustment.
And, adjust the number which you want.(In this example, the number is "140". Refer to the table 1 on the next page.)

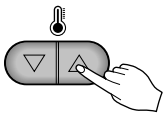

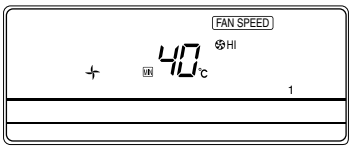

NOTICE The range of selection is from 1~254. Since, the display is two Digit only.
If the range selection is above 100 then the third digit will appear in the screen as shown.

4 Shift the fan speed mode by pressing the fan speed button.
And then, Adjust numbers of next steps by repeating the stage 3.
(In this example, the numbers are "180" and "205" respectly)

5 Push the "Timer" and "Wind" button simultaneously for more than 3 seconds.
Then, Wind Data is memorized by the EEPROM of the main PCB.

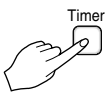

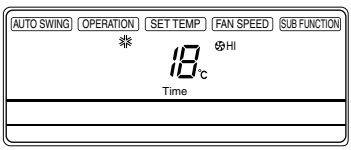

External Static Pressure & air Flow

[Table]

Static Pressure(mmAq)		0	2	4	6	8	10	12	14	15
Model Name	Step(Hi/Med/Lo)	Setting Value								
	CMM									
LB-H306GSS0 LB-C306GSS0	26.5	153	150	150	148	130	1	-	-	-
	23	173	173	175	175	170	155	-	-	-
	20	190	190	190	190	190	190	-	-	-
LB-H488RSS0 LB-C488RSS0	45	210	205	199	191	189	180	155	138	110
	40	230	225	219	215	210	205	193	180	171
	35	240	235	230	220	215	210	200	190	185
LB-H608RSS0 LB-C608RSS0	50	185	180	174	162	154	140	90	5	1
	45	210	205	199	191	189	180	155	138	110
	40	230	225	219	215	210	205	193	180	171

NOTICE : **1. Be sure to set the value refering table 1.Unexpected set value will cause mal-function.**
2. Table 1 is based at 220V. According to the fluctuation of voltage, air flow rate varies.

Checking the Power Cord

If the main cable for power supply is connected incorrect or wrong, it shall cause strange noise from the compressor and cooling operation does not work.

Troubles and Solutions

Troubles	Solutions
➲ Occurrence of strange noise from compressor ➲ No variation of pressure gages.	➲ Change the R,S wires to the terminal block.

Outdoor unit circuit

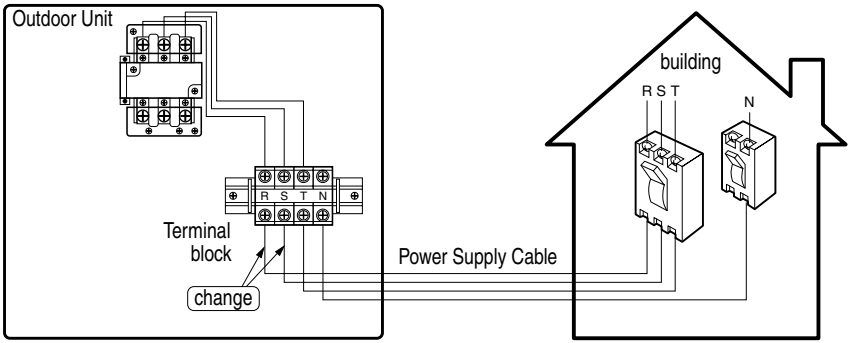

Installation Guide at the Seaside

CAUTION:

1. **Air conditioners should not be installed in areas where corrosive gases, such as acid or alkaline gas, are produced.**
2. **Do not install the product where it could be exposed to sea wind (salty wind) directly. It can result corrosion on the product. Corrosion, particularly on the condenser and evaporator fins, could cause product malfunction or inefficient performance.**
3. **If outdoor unit is installed close to the seaside, it should avoid direct exposure to the sea wind. Otherwise it needs additional anticorrosion treatment on the heat exchanger.**

Selecting the location(Outdoor Unit)

1) If the outdoor unit is to be installed close to the seaside, direct exposure to the sea wind should be avoided. Install the outdoor unit on the opposite side of the sea wind direction.

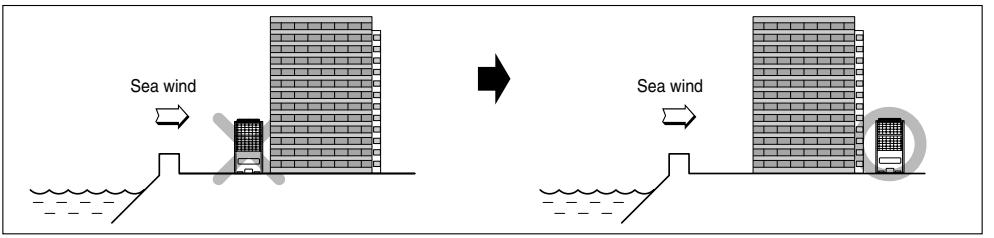

2) In case, to install the outdoor unit on the seaside, set up a windbreak not to be exposed to the sea wind.

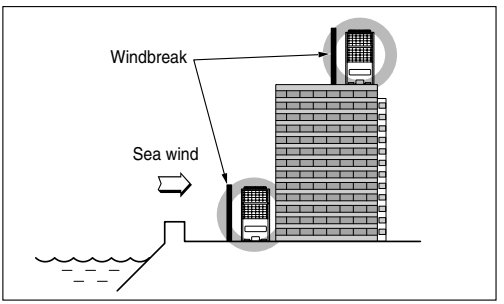

- It should be strong enough like concrete to prevent the sea wind from the sea.
- The height and width should be more than 150% of the outdoor unit.
- It should be keep more than 70 cm of space between outdoor unit and the windbreak for easy air flow.

3) Select a well-drained place.

1. If you can't meet above guide line in the seaside installation, please contact LG Electronics for the additional anticorrosion treatment.
2. Periodic (more than once/year) cleaning of the dust or salt particles stuck on the heat exchanger by using water

P/No.: 3828A20573B