LG
Life's Good

ENGLISH
ITALIANO
ESPAÑOL
FRANÇAIS
DEUTSCH

INSTALLATION MANUAL
AIR CONDITIONER

- Please read this installation manual completely before installing the product.
- Installation work must be performed in accordance with the national wiring standards by authorized personnel only.
- Please retain this installation manual for future reference after reading it thoroughly.

P/NO : MFL40910603

www.lg.com

TABLE OF CONTENTS

Installation Requirements	*Required Parts*	*Required Tools*
Safety Precautions 3		
Installation of Indoor, Outdoor unit.....6	• Connecting cable • Four Type "A" Screw • Hanging Bolt (W 3/8 or M10 length 650mm)	• Level • Screw driver • Electric drill • Hole core drill (ø70mm)
The indoor unit installation.....9		
Remote controller installation.....24		
Wiring connection 26		
Connecting Pipes to the Indoor Unit.....28	• Pipes: Gas side Liquid side • Insulated drain hose • Additional Drain hose Inner Dia Cassette type.....32mm Duct type.....25mm • Additional drain pipe (Convertible type) (Outer diameter .....15.5mm)	• Flaring Tools set • Torque Wrenches • Hexagonal Wrench (4mm, 5mm) • Gas-leak detector
Installation to decorative panel 30		
Indoor unit drain piping 31		
Test running 36		• Owner's Manual • Thermometer
Optional operation....38		
Installation guide at seaside.....43		

Safety Precautions

To prevent the injury of the user or other people and property damage, the following instructions must be followed.

- Be sure to read before installing the air conditioner.
- Be sure to observe the cautions specified here as they include important items related to safety.
- Incorrect operation due to ignoring instruction will cause harm or damage. The seriousness is classified by the following indications.

⚠WARNING	This symbol indicates the possibility of death or serious injury.
⚠CAUTION	This symbol indicates the possibility of injury or damage to properties only.

- The meanings of the symbols used in this manual are as shown below.

	**Be sure not to do.**
	**Be sure to follow the instruction.**

⚠WARNING

■ Installation

Always perform grounding.

- Otherwise, it may cause electrical shock.

Don't use a power cord, a plug or a loose socket which is damaged.

- Otherwise, it may cause a fire or electrical shock.

For installation of the product, always contact the service center or a professional installation agency.

- Otherwise, it may cause a fire, electrical shock, explosion or injury.

Securely attach the electrical part cover to the indoor unit and the service panel to the outdoor unit.

- If the electrical part cover of the indoor unit and the service panel of the outdoor unit are not attached securely, it could result in a fire or electric shock due to dust, water, etc.

Always install an air leakage breaker and a dedicated switching board.

- No installation may cause a fire and electrical shock.

Do not keep or use flammable gases or combustibles near the air conditioner.

- Otherwise, it may cause a fire or the failure of product.

Ensure that an installation frame of the outdoor unit is not damaged due to use for a long time.

- It may cause injury or an accident.

Do not disassemble or repair the product randomly.

- It will cause a fire or electrical shock.

Do not install the product at a place that there is concern of falling down.

• Otherwise, it may result in personal injury.

Use caution when unpacking and installing.

• Sharp edges may cause injury.

Use a vacuum pump or Inert (nitrogen) gas when doing leakage test or air purge. Do not compress air or Oxygen and Do not use Flammable gases. Otherwise, it may cause fire or explosion.

• There is the risk of death, injury, fire or explosion.

■ Operation

Do not share the outlet with other appliances.

• It will cause an electric shock or a fire due to heat generation.

Do not use the damaged power cord.

• Otherwise, it may cause a fire or electrical shock.

Do not modify or extend the power cord randomly.

• Otherwise, it may cause a fire or electrical shock.

Take care so that the power cord may not be pulled during operation.

• Otherwise, it may cause a fire or electrical shock.

Unplug the unit if strange sounds, smell, or smoke comes from it.

• Otherwise, it may cause electrical shock or a fire.

Keep the flames away.

• Otherwise, it may cause a fire.

Take the power plug out if necessary, holding the head of the plug and do not touch it with wet hands.

• Otherwise, it may cause a fire or electrical shock.

Do not use the power cord near the heating tools.

• Otherwise, it may cause a fire and electrical shock.

Do not open the suction inlet of the indoor/outdoor unit during operation.

• Otherwise, it may electrical shock and failure.

Do not allow water to run into electrical parts.

• Otherwise, it may cause the failure of machine or electrical shock.

Hold the plug by the head when taking it out.

• It may cause electric shock and damage.

Never touch the metal parts of the unit when removing the filter.

• They are sharp and may cause injury.

Do not step on the indoor/outdoor unit and do not put anything on it.

• It may cause an injury through dropping of the unit or falling down.

Do not place a heavy object on the power cord.

• Otherwise, it may cause a fire or electrical shock.

When the product is submerged into water, always contact the service center.

• Otherwise, it may cause a fire or electrical shock.

Take care so that children may not step on the outdoor unit.

• Otherwise, children may be seriously injured due to falling down.

⚠CAUTION

■ Installation

Install the drain hose to ensure that drain can be securely done.

• Otherwise, it may cause water leakage.

Install the product so that the noise or hot wind from the outdoor unit may not cause any damage to the neighbors.

• Otherwise, it may cause dispute with the neighbors.

Always inspect gas leakage after the installation and repair of product.

• Otherwise, it may cause the failure of product.

Keep level parallel in installing the product.

• Otherwise, it may cause vibration or water leakage.

■ Operation

Avoid excessive cooling and perform ventilation sometimes.

• Otherwise, it may do harm to your health.

Use a soft cloth to clean. Do not use wax, thinner, or a strong detergent.

• The appearance of the air conditioner may deteriorate, change color, or develop surface flaws.

Do not use an appliance for special purposes such as preserving animals vegetables, precision machine, or art articles.

• Otherwise, it may damage your properties.

Do not place obstacles around the flow inlet or outlet.

• Otherwise, it may cause the failure of appliance or an accident.

Installation of Indoor, Outdoor Unit

Selection of the best location

1. Indoor unit
Cassette type

- There should not be any heat source or steam near the unit.
- There should not be any obstacles to prevent the air circulation.
- A place where air circulation in the room will be good.
- A place where drainage can be easily obtained.
- A place where noise prevention is taken into consideration.
- Do not install the unit near the door way.
- Ensure the spaces indicated by arrows from the wall, ceiling, or other obstacles.
- The indoor unit must keep the maintenance space.

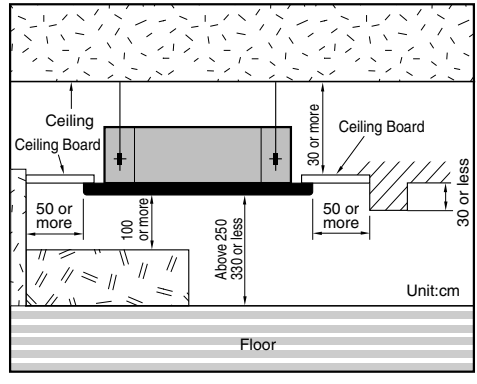

Duct type

- The place shall easily bear a load exceeding four times the indoor unit's weight.
- The place shall be able to inspect the unit as the figure.
- The place where the unit shall be leveled.
- The place shall allow easy water drainage.(Suitable dimension "H" is necessary to get a slope to drain as figure.)
- The place shall easily connect with the outdoor unit.
- The place where the unit is not affected by an electrical noise.
- The place where air circulation in the room will be good .
- There should not be any heat source or steam near the unit

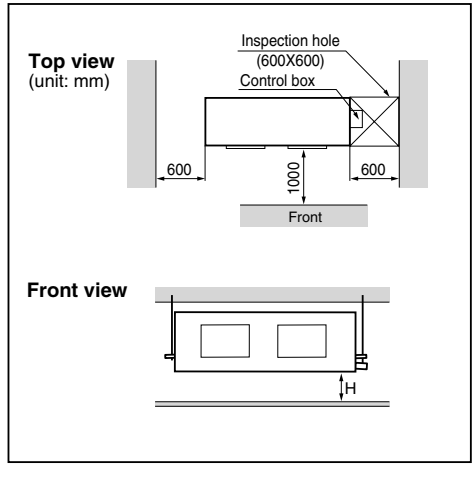

Convertible type

- Do not have any heat or steam near the unit.
- Select a place where there are no obstacles in front of the unit.
- Make sure that condensation drainage can be conveniently routed away.
- Do not install near a doorway.
- Ensure that the interval between a wall and the left (or right) of the unit is more than 70cm.
- Use a stud finder to locate studs to prevent unnecessary damage to the wall.
- There should not be any heat source or steam near the unit.
- There should not be any obstacles to prevent the air circulation.
- A place where air circulation in the room will be good.
- A place where drainage can be easily obtained.
- A place where noise prevention is taken into consideration.
- Do not install the unit near the door way.
- Ensure the spaces indicated by arrows from the wall, ceiling, or other obstacles.

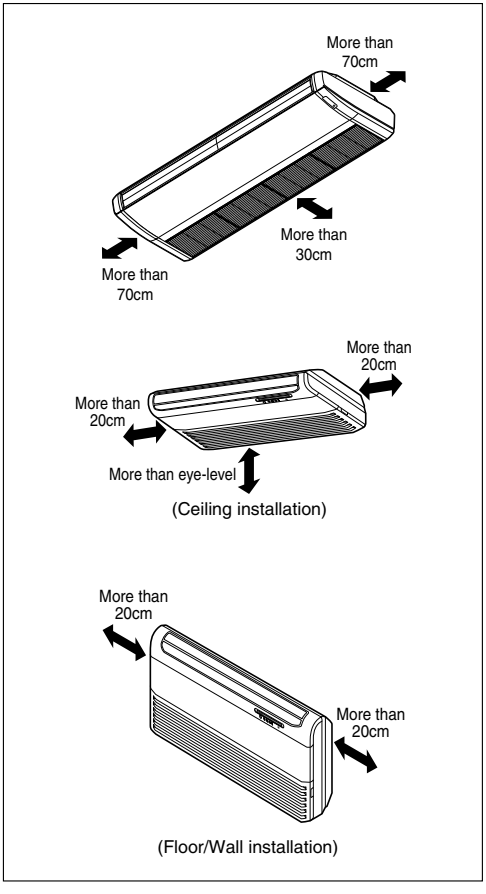

2. Outdoor unit

1. If an awning is built over the unit to prevent direct sunlight or rain exposure, make sure that heat radiation from the condenser is not restricted.
2. Ensure that the spaces indicated by arrows around front, back and side of the unit.
3. Do not place animals and plants in the path of the warm air.
4. Take the air conditioner weight into account and select a place where noise and vibration are minimum.
5. Select a place so that the warm air and noise from the air conditioner do not disturb neighbors.

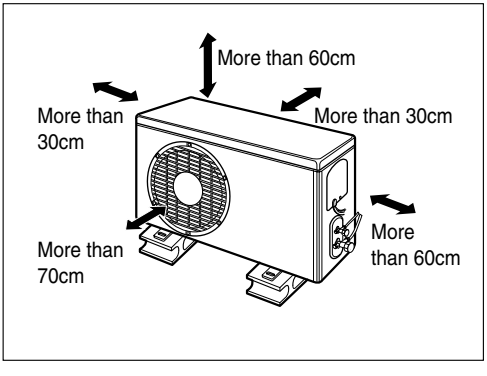

3. Piping length and the elevation

Capacity	Pipe Size (Diameter:Ø)		Length A(m)		Elevation B(m)		*Additional refrigerant(g/m)
	Gas	Liquid	Standard	Max.	Standard	Max.	
24k Btu/h	5/8"(15.88mm)	3/8"(9.52mm)	7.5	50	5	30	35
30k Btu/h	5/8"(15.88mm)	3/8"(9.52mm)	7.5	50	5	30	35
36k Btu/h	5/8"(15.88mm)	3/8"(9.52mm)	7.5	50	5	30	50

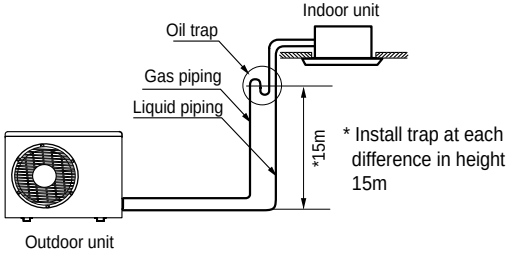

* Install trap at each difference in height 15m

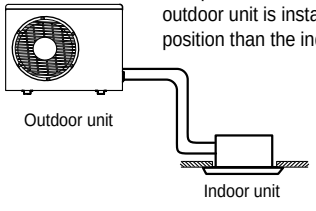

A trap is not necessary when the outdoor unit is installed in a higher position than the indoor unit.

CAUTION:

- **Rated performance for refrigerant line length of:7.5m**
- **Capacity is based on standard length and maximum allowance length is on the basis of reliability.**
- **Improper refrigerant charge may result in abnormal cycle.**

ENGLISH

The indoor unit installation

1. Cassette type

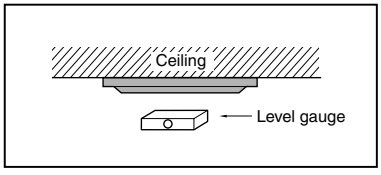

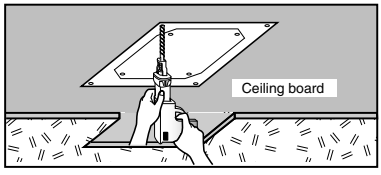

TE Series

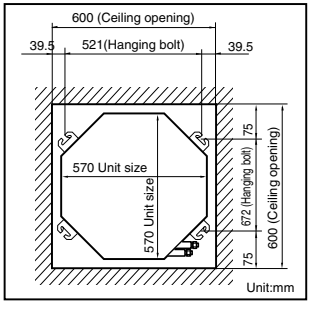

TH/TD Series

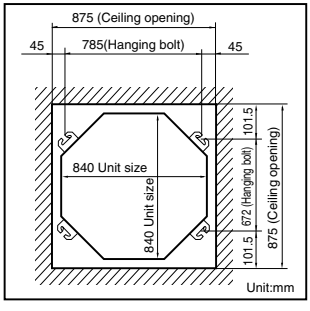

TM/TN/TP Series

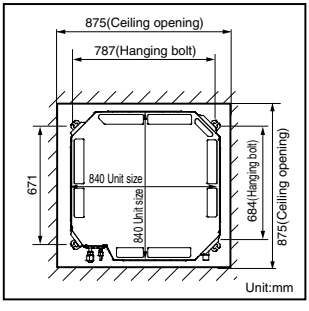

CAUTION :

- **This air-conditioner uses a drain pump.**
- **Install the unit horizontally using a level gauge.**
- **During the installation, care should be taken not to damage electric wires.**

- Select and mark the position for fixing bolts and piping hole.
- Decide the position for fixing bolts slightly tilted to the drain direction after considering the direction of drain hose.
- Drill the hole for anchor bolt on the wall.

NOTICE

• Avoid the following installation location.

1. Such places as restaurants and kitchen where considerable amount of oil steam and flour is generated. These may cause heat exchange efficiency reduction, or water drops, drain pump mal-function. In these cases, take the following actions;
   - Make sure that ventilation fan is enough to cover all noxious gases from this place.
   - Ensure enough distance from the cooking room to install the air conditioner in such a place where it may not suck oily steam.
2. Avoid installng air conditioner in such places where cooking oil or iron powder is generated.
3. Avoid places where inflammable gas is generated.
4. Avoid place where noxious gas is generated.
5. Avoid places near high frequency generators.

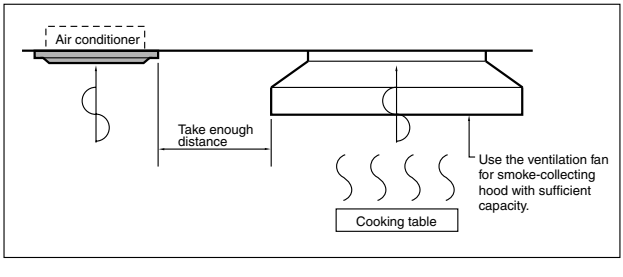

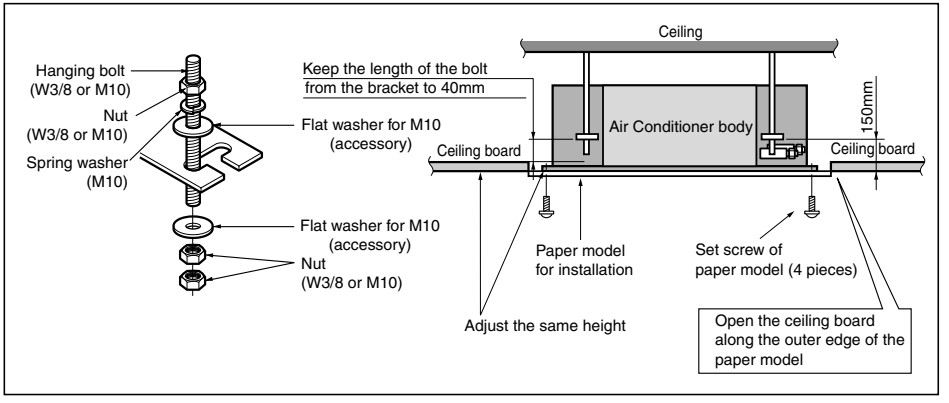

- The following parts is option.
  - ① Hanging Bolt - W 3/8 or M10
  - ② Nut - W 3/8 or M10
  - ③ Spring Washer - M10
  - ④ Plate Washer - M10

CAUTION: Tighten the nut and bolt to prevent unit falling.

- Drill the piping hole on the wall slightly tilted to the outdoor side using a Ø 70 hole-core drill.

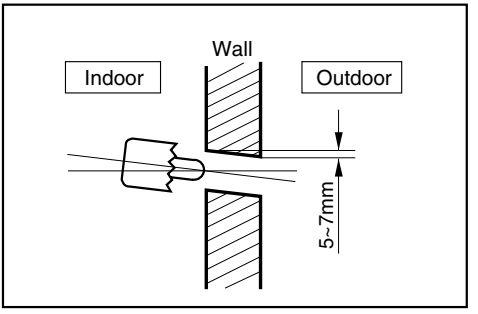

2. Duct type

CASE 1

POSITION OF SUSPENSION BOLT

- Apply a joint-canvas between the unit and duct to absorb unnecessary vibration.
- Apply a filter Accessory at air return hole.

(Unit:mm)

Dimension / Capacity	A	B	C	D	E	F	(G)	H	I
30/36k Btu/hr	1232	1182	355	45.5	450	30	87	830	186
24k Btu/h	932	880	355	45.5	450	30	87	750	163

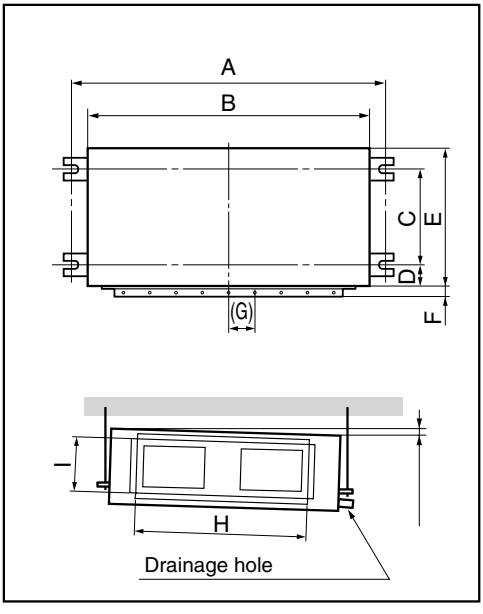

CASE 2

- Install the unit leaning to a drainage hole side as a figure for easy water drainage.

POSITION OF CONSOLE BOLT

- A place where the unit will be leveled and that can support the weight of the unit.
- A place where the unit can withstand its vibration.
- A place where service can be easily performed.

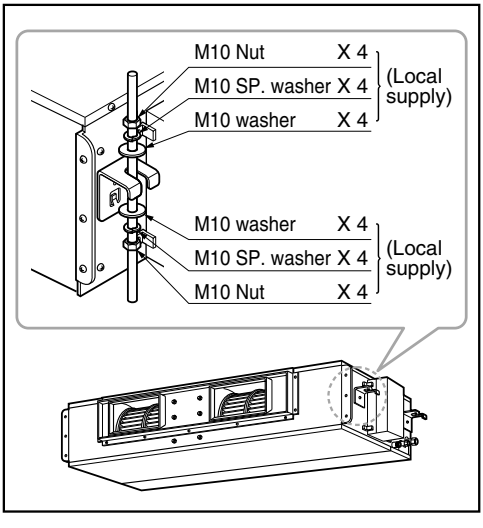

- Select and mark the position for fixing bolts.
- Drill the hole for set anchor on the face of ceiling.

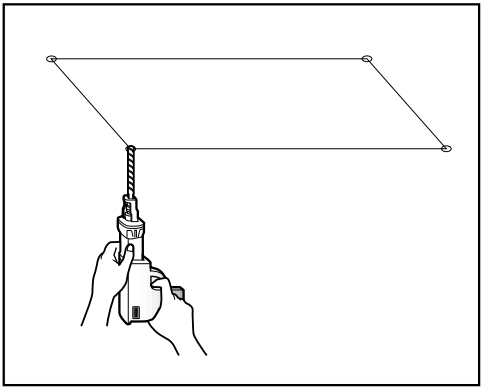

- Insert the set anchor and washer onto the suspension bolts for locking the suspension bolts on the ceiling.
- Mount the suspension bolts to the set anchor firmly.
- Secure the installation plates onto the suspension bolts (adjust level roughly) using nuts, washers and spring washers.

CAUTION: Tighten the nut and bolt top revent unit falling.

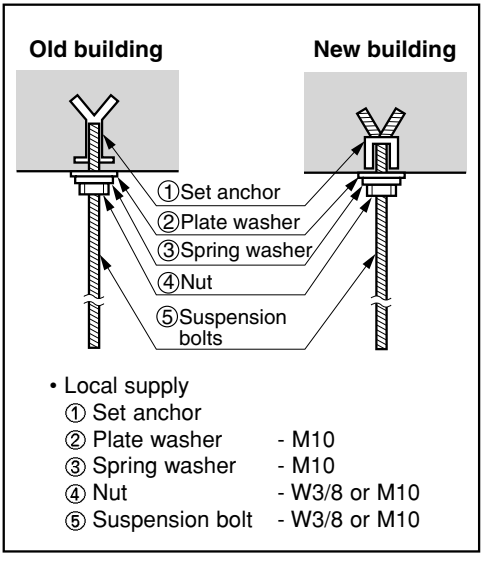

- Local supply

① Set anchor	
② Plate washer	- M10
③ Spring washer	- M10
④ Nut	- W3/8 or M10
⑤ Suspension bolt	- W3/8 or M10

⚠ CAUTION

1. **Install declination** of the indoor unit is very **important for the drain** of the duct type air conditioner.
2. Minimum thickness of the insulation for the connecting pipe shall be 5mm.

Front of view

• The unit must be horizontal or declined to the drain hose connected when finished installation.

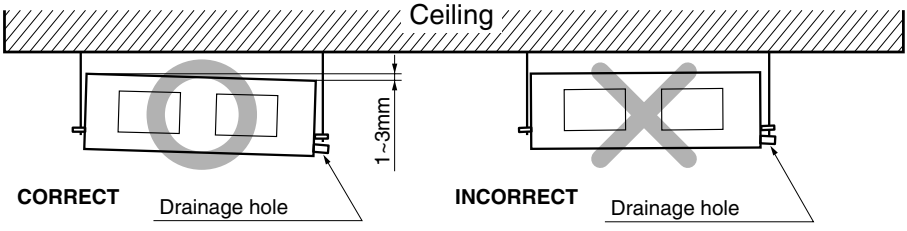

CAUTION FOR GRADIENT OF UNIT AND DRAIN PIPING

Lay the drain hose with a downward inclination so water will drain out.

• Always lay the drain with downward inclination (1/50 to 1/100).
Prevent any upward flow or reverse flow in any part.
• 5mm or thicker formed thermal insulator shall always be provided for the drain pipe.

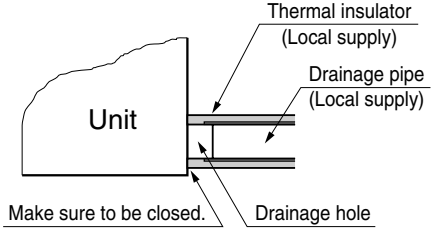

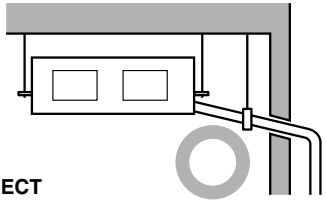

• Upward routing not allowed

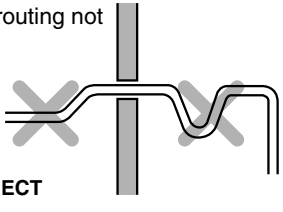

• Install the P-Trap (or U-Trap) to prevent a water leakage caused by the blocking of intake air filter.

Applied U-Trap Dimension

A 70mm
B 2C
C 2 x SP
SP = External Pressure (mmAq)
Ex) External Pressure = 10mmAq
A 70mm
B 40mm
C 20mm

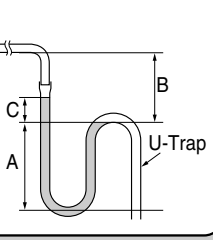

3. Convertible type

Open side cover

1. Remove two screws from side-cover as shown in fig.
2. Unlock side-cover from side panel by slightly pulling the edge of side cover.
3. Tap the side-cover with your palm on the backside.(Inlet grill side.)
4. Hold the side-cover with other hand while tapping to prevent it to fall down.
5. The Drain hole is on the left side of the unit and side cover opening is common for drain pipe,connecting pipe and wiring diagram.
6. Remove the rubber stopple in the desired drain direction.
7. Knock out the pipe hole from the left side-cover with the help or nipper/plier.
8. Knock hole on right side-cover only if right side is selected for water drain.

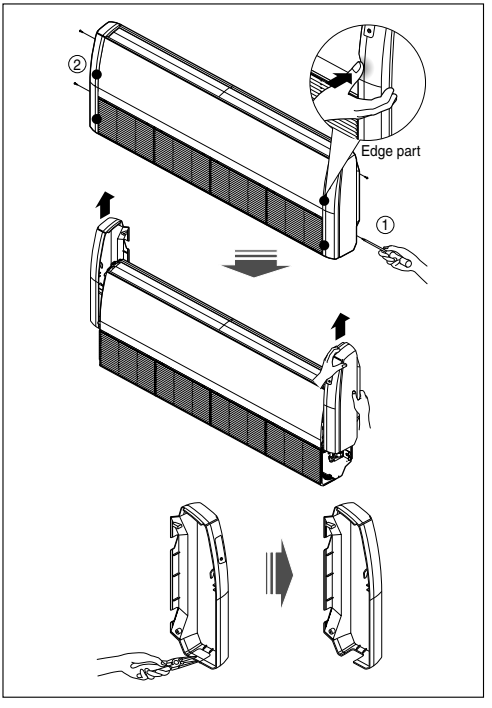

MOUNTING THE ANCHOR NUT AND BOLT

- Prepare 4 suspension bolts. (Each bolts length should be same.)
- Measure and mark the position for the Suspension bolts and the piping hole.
- Drill the hole for anchor nut on the ceiling.
- Insert the nuts and washer onto the suspension bolts for locking the suspension bolts on the ceiling.
- Mount the suspension bolts to the anchor-nuts firmly.
- Secure the hangers onto the Suspension bolts (adjust level roughly.) using nuts, washers and spring washers.
- Adjust a level with a level gauge on the direction of left-right, back-forth by adjusting suspension bolts.
- Adjust a level on the direction of top-bottom by adjusting supension bolts. Then the unit will be declined to the bottomside so as to drain well.

DIM. / MODEL	A	B
VL	1655	320
VK	1255	320
VJ	855	320

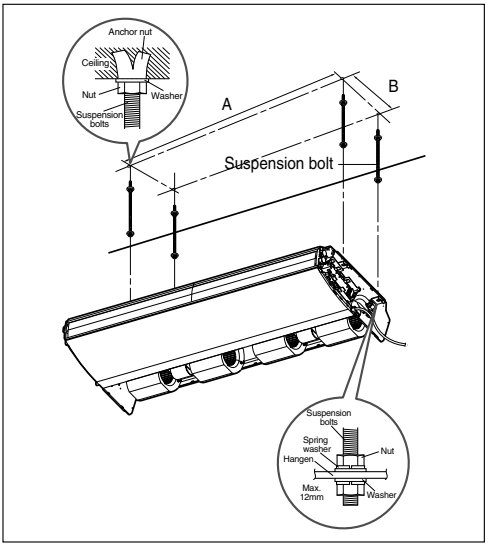

⚠CAUTION

: Tighten the nut and bolt to prevent unit falling.

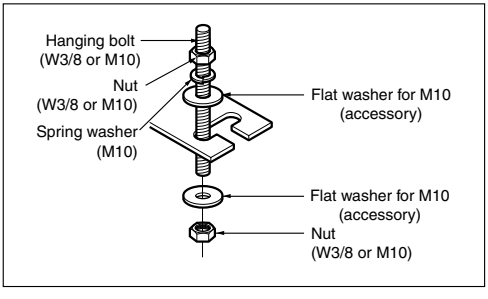

DRILL A HOLE IN THE WALL.

- Drill the piping hole with a ø70mm hole core drill. Drill the piping hole at either the right or the left with the hole slightly slanted to the outdoor side.

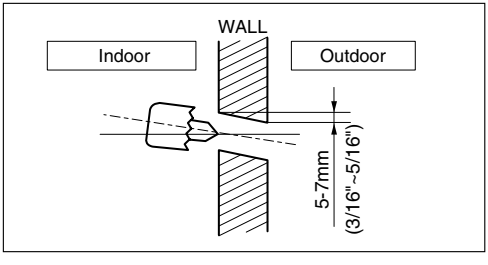

Indoor unit installation

Hang the Indoor unit on suspension bolt as per following guidelines:

1. Lift the indoor unit to sufficient height.
2. Insert the suspended part of four suspension bolt in the four hangers provided on the side of main body one by one.
3. Lower the indoor unit till the hangers rest on their respective flat washer.
4. Adjust the level in the top down direction by adjusting the suspension bolts. Inclined the indoor unit as per direction provided in the fig

⚠CAUTION

: Installation Information For Declination

1. **Install declination** of the indoor unit is very **important for the drain** of the convertible type air conditioner.
2. Minimum thickness of the insulation for the connecting pipe shall be 10mm.
3. If the Installation Plates are fixed to horizontal line, the indoor unit after installing will be declined to the bottomside.

Front of view

- The unit must be horizontal or inclined at angle.
- The inclination should be less than or equal to 1° or in between 10 to 20mm inclined in drain direction as shown in fig.

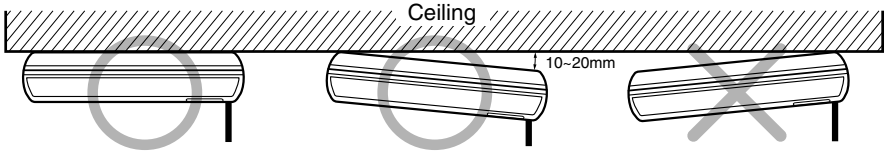

Side of view

- The unit must be declined to the bottomside of the unit when finished installation.

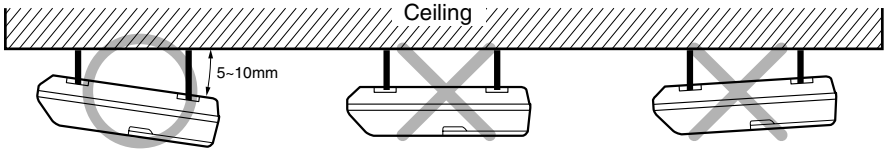

1) Indoor unit installation

■ ***Before Installing, prepare Installation Plates***

- 'Installation Plates' are attached at the bottom of indoor unit.
  Detach them by removing each 3 screws at both sides.
- Detach 'Side Plate (R,L)' by removing each 2 screws on both sides.
- Pull the upper right and left side of 'Inlet Grille' to the front, and it will stop at slightly tilted position.
- Unhook the 'Inlet hanger' from the 'Hanger screw' on the both left and right side.
- Detach the 'Inlet Grille' from the Indoor Unit.

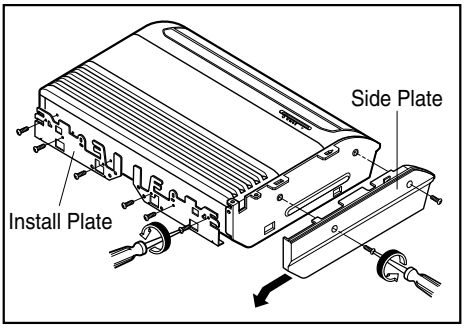

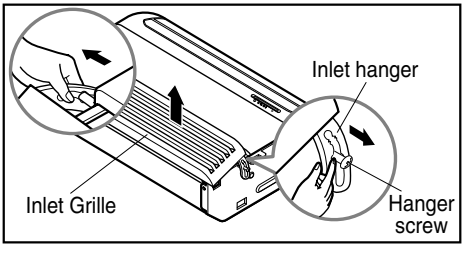

1) Installation on the ceiling

- Measure and mark the position for the Suspension bolts and the piping hole.
- Drill the hole for anchor nut on the ceiling.

※ **Before secure the Installation Plates, select the bent direction of the Installion Plate to the inside or the outside according to the installation circumstances.**

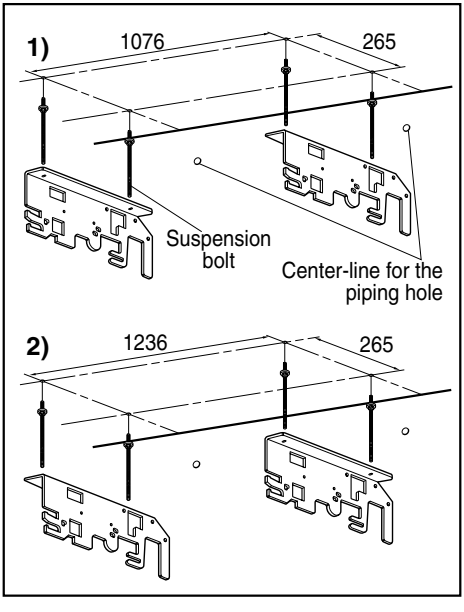

- Drill the piping hole on the wall slightly tilted to the outdoor side using a ø70 hole-core drill.

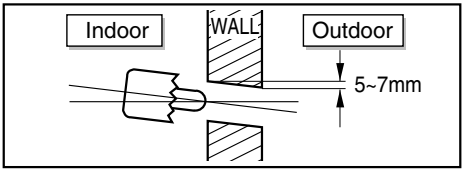

- Insert the nuts and washer onto the suspension bolts for locking the suspension bolts on the ceiling.
- Mount the suspension bolts to the anchor-nuts firmly.
- Secure the Installation plates onto the Suspension bolts (adjust level roughly.) using nuts, washers and spring washers.

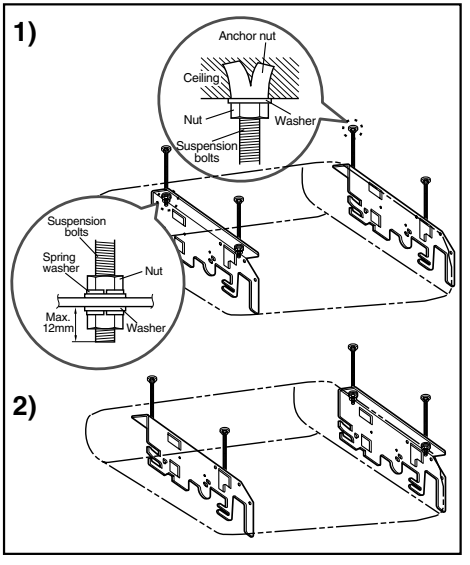

- Engage 2 hooks on the both left and right side of the unit to the lower slot of Installation Plates.
- Adjust a level with a level gauge on the direction of left-right, back-forth by adjusting suspension bolts.
- Move the hooks on the unit to the upper slot of Installation Plates. Then the unit will be declined to the bottomside so as to drain well.

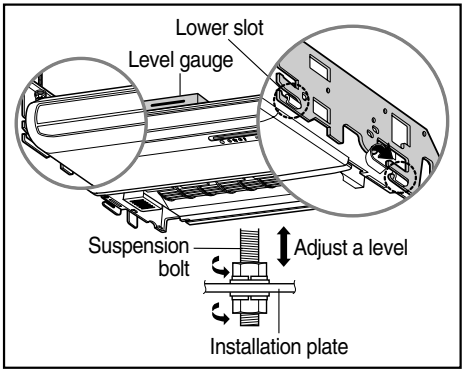

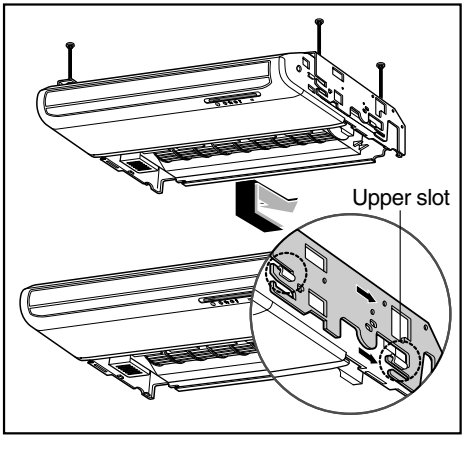

⚠ CAUTION

1. **Install declination** of the indoor unit is very **important for the drain** of the convertible type air conditioner.
2. Minimum thickness of the insulation for the connecting pipe shall be 7mm.
3. If the Installation Plates are fixed to horizontal line, the indoor unit after installing will be declined to the bottomside.

Front of view

• The unit must be horizontal or declined to the drain hose connected when finished installation.

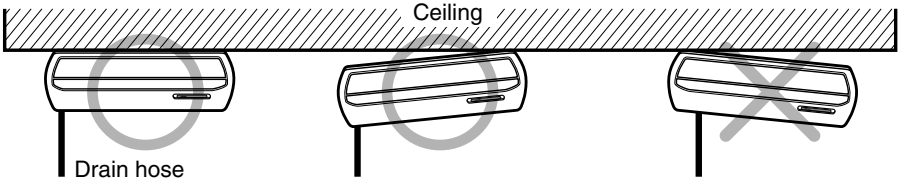

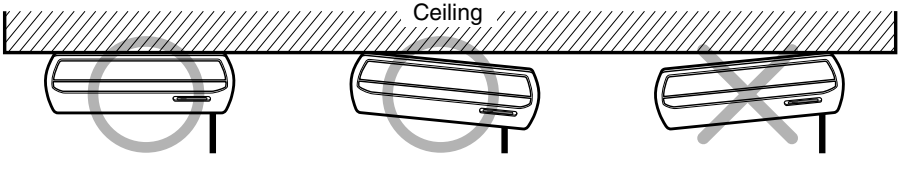

Side of view

• The unit must be declined to the bottomside of the unit when finished installation.

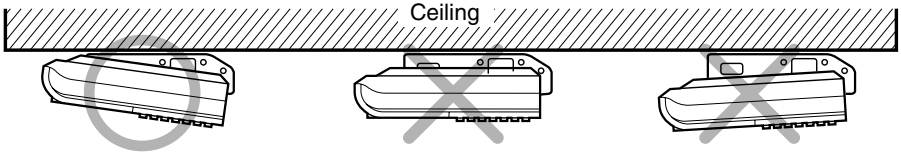

• Secure the unit to the Installation Plates with four M8 bolts and washers.

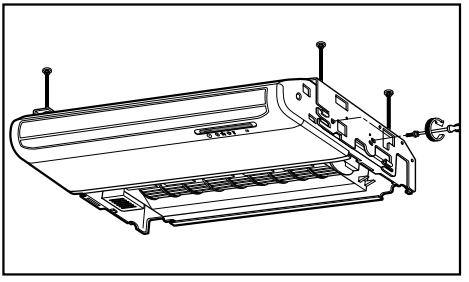

• Before working, refer to "Connecting pipe to Indoor Unit" on page 16.

• Hook up the Inlet Grille Hook to the cabinet.
• Hang the Inlet Hanger to the screw.

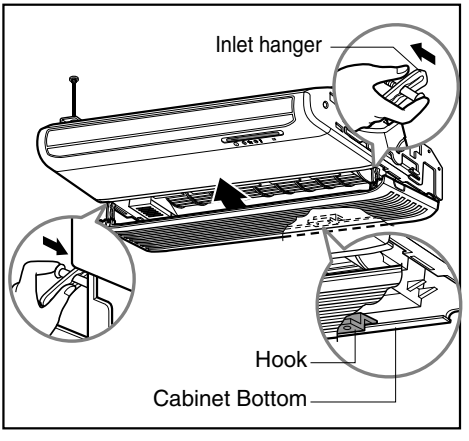

• Fit the projection hooks of the side plates to the 'Side Panel' and the 'Front Panel' by lifting it.
• Fasten the screws.

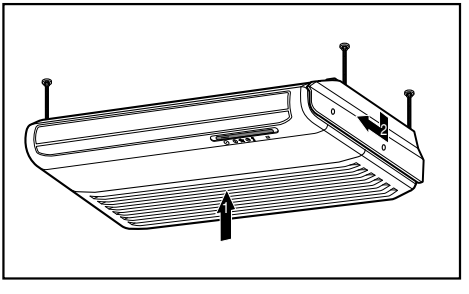

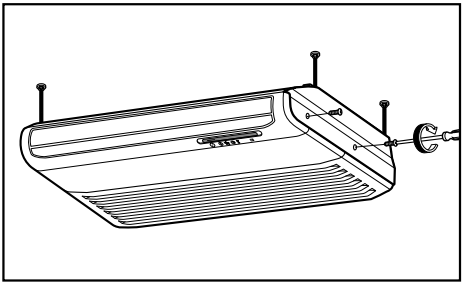

2) Installation on the Wall

- Select and mark the position for fixing bolts and piping hole.
  Decide the position for fixing bolts slightly tilted to the drain direction after considering the direction of drain hose.
- Drill the hole for anchor nut on the wall.

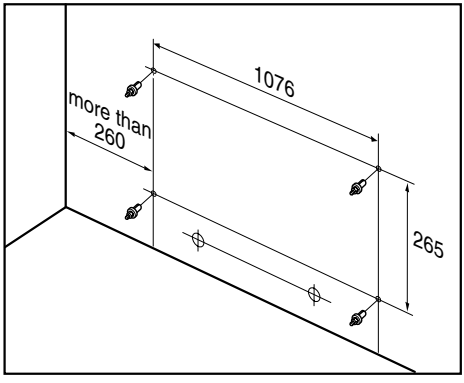

- Drill the piping hole on the wall slightly tilted to the outdoor side using a ø70 hole-core drill.

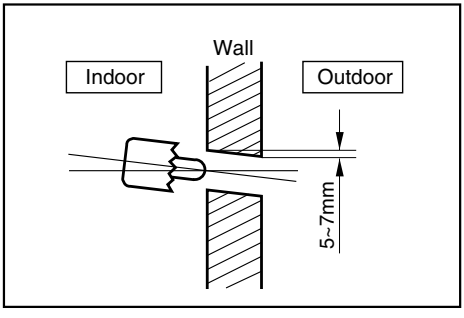

- Secure the 'Install Plate' onto the wall with four anchor bolts, washers and spring washers.

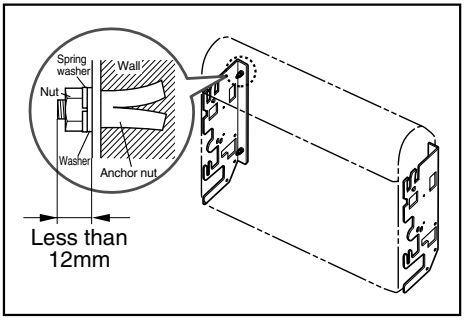

※ Before secure the Install Plates, select the bent direction of the 'Install Plate' to the inside or outside according to the installation circumstances.

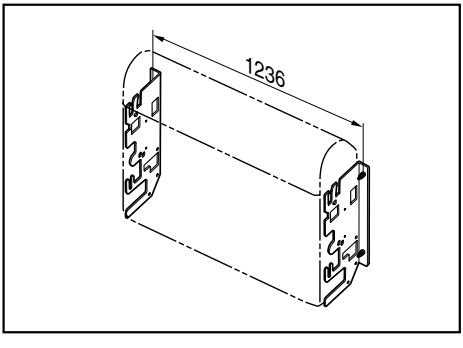

Install the Indoor unit onto Installation Plate.

- Insert 2 hooks on the both left and right side of the unit to the inner slot (wall side) of the Installation Plate.

- Secure the unit to the Installation Plate with four M8 bolts and washers.

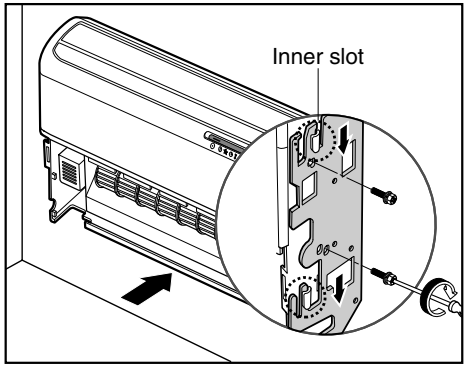

- **Before working, refer to "Connecting pipe and cable to Indoor Unit" on page 16.**

- Hook up the Inlet Grille Hook to the cabinet.
- Hang the Inlet Hanger to the screw.

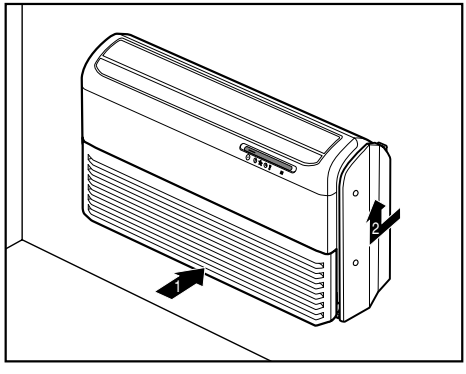

- Fit the projection hooks of the side plates to the 'Side Panel' and the 'Front Panel' by lifting it.
- Fasten the screws.

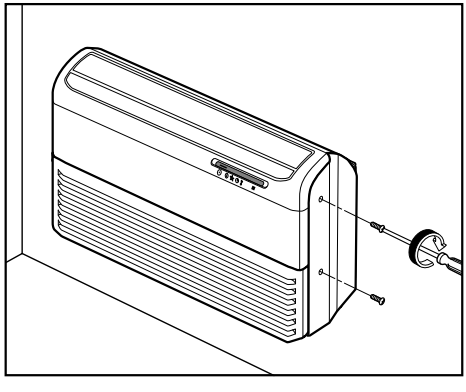

3) Installation on the floor

Installation of Mount Bracket.

- Select and mark the position for Mount Brackets and the piping hole.
- Drill the hole for the anchor nut on the wall.
- Drill the piping hole using a ø70 hole-core drill.
- Secure the Mount Brackets on the wall with four M4 screws.

Install the indoor unit onto the Mount Brackets.

- Engage the slot at the back of the unit with Mount Bracket.

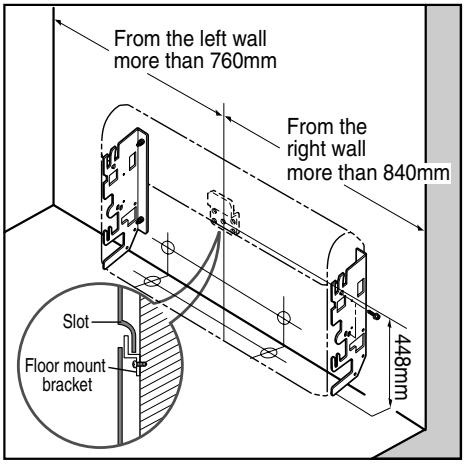

- Drill the piping hole with 70mm dia, hole core drill.
- Piping hole should be slightly slant to the outdoor side.

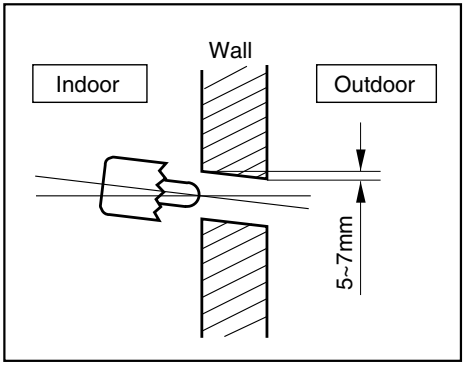

After Installing, reassemble detached parts.

- Hang the 'Inlet Grille' and hook the 'Inlet Hanger' to the Hanger Screw.
- Assemble the 'Side Plates(R,L)' with 2 screws on both left and right side.

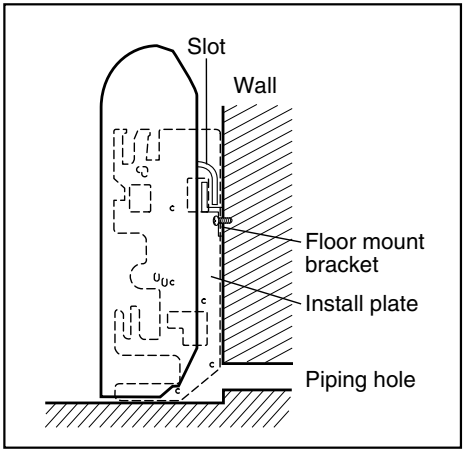

Remote Controller Installation

installation of remote control box

Install the remote control box and cord correctly.

POINT OF REMOTE CONTROLLER INSTALLATION

- Although the room temperature sensor is in the indoor unit, the remote control box should be installed in such places away from direct sunlight and high humidity.

INSTALLATION OF THE REMOTE CONTROL BOX

- Select places that is not splashed by water.
- Select control position after receiving customer approval.
- The room temperature sensor of the thermostat for temperature control is built in the indoor unit.
- This remote controller equipped with liquid crystal display. If this position is higher or lower, display is difficult to see. (The standard height is 1.2~1.5m high)

ROUTING OF THE REMOTE CONTROL CORD

- Keep the remote control cord away from the refrigerant piping and the drain piping.
- To protect the remote control cord from electrical noise, place the cord at least 5cm away from other power cables. (Audio equipment, Television set, etc)
- If the remote control cord is secured to a wall, provide a trap at the top of the cord to prevent water droplets from running.

ELECTRICAL WIRING TO THE INDOOR UNIT

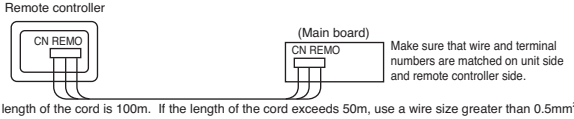

The maximum length of the cord is 100m. If the length of the cord exceeds 50m, use a wire size greater than 0.5mm^2.

DISASSEMBLING OF THE REMOTE CONTROLLER

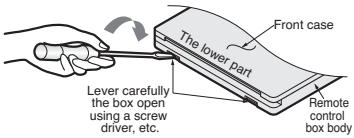

WHEN THE REMOTE CONTROL BOX IS INSTALLED WITH THE CORD BURIED.

PROCEDURE OF INSTALLATION

1. Fix the under plate on the switch box by screws(Local supply). In this case, fit the under plate on the wall, and be careful of deformation.
2. Receive the remote control cord in the switch box.
3. Hook the remote control unit on the under plate.

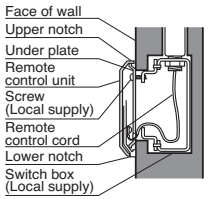

WHEN THE REMOTE CONTROL BOX IS INSTALLED WITH THE CORD EXPOSED.

PROCEDURE OF INSTALLATION

1. Fix the under plate on the wall by self tapping screws (accessory).
2. Make a slit (Part A) at the top side of the remote control box by nipper.
3. Rout the cord as shown in the following figure. In this case, push the cord into the around of case(Part B).
4. Hook the remote control unit on the under plate.

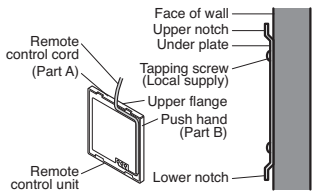

FIXING OF REMOTE CONTROL CORD

1. Fix the cord clamps on the wall by ø3 tapping screws(Local supply).
2. Fix the remote control cord.



Wired remote controller installation

• Since the room temperature sensor is in the remote controller, the remote controller box should be installed in a place away from direct sunlight, high humidity and direct supply of cold air to maintain proper space temperature. Install the remote controller about 5ft(1.5m) above the floor in an area with good air circulation at an average temperature.

Do not install the remote controller where it can be affected by:

- Drafts, or dead spots behind doors and in corners.
- Hot or cold air from ducts.
- Radiant heat from sun or appliances.
- Concealed pipes and chimneys.
- Uncontrolled areas such as an outside wall behind the remote controller.
- This remote controller is equipped with a seven segment LED. display. For proper display of the remote controller LED's, the remote controller should be installed properly as shown in Fig.1. (The standard height is 1.2~1.5 m from floor level.)

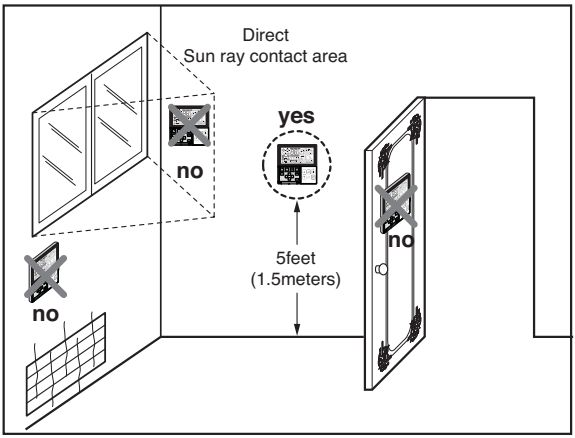

Fig.1 Typical locations for remote controller

Wireless Remote Controller

HOW TO MOUNT ONTO A WALL

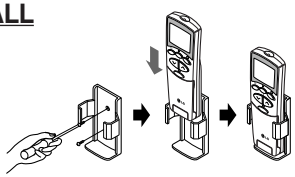

HOW TO INSERT BATTERIES

1. Remove the battery cover from the remote controller.
   • Slide the cover according to the arrow direction.
2. Insert the two batteries.
   • Be sure that the (+) and (-) directions are correct.
   • Be sure that both batteries are new.
3. Re-attach the cover.
   • Slide it back into position.

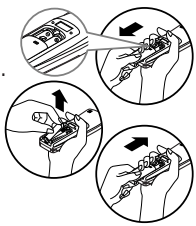

• Do not use rechargeable batteries, such batteries differ from standard dry cells in shape, dimensions, and performance.

• Romove the batteries from the remote controller if the air conditioner is not going to be used for some long time.

Wiring Connection

• Open the control box cover and connect the Remote controller cord and Indoor power wires.

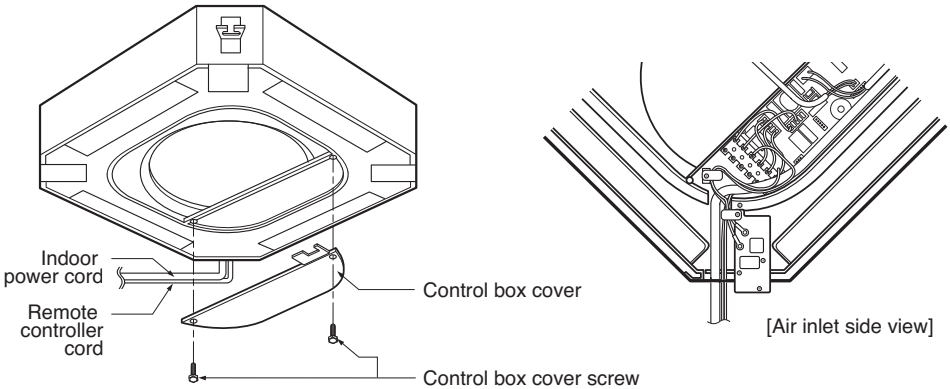

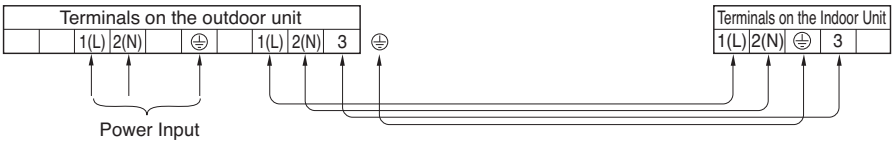

CAUTION

The power cord connected to the outdoor unit should be complied with the following specifications (This equipment shall be provided with a cord set complying with the national regulation.).

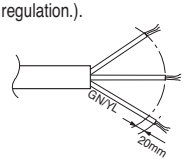

NORMAL CROSS-SECTIONAL AREA

Capacity	1 Phase
24/30/36k Btu/h	2.5mm²

The connecting cable connected to the indoor and outdoor unit should be complied with the following specifications (This equipment shall be provided with a cord set complying with the national regulation.).

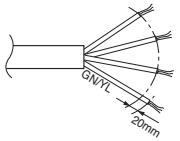

NORMAL CROSS-SECTIONAL AREA 0.75mm² (24/30/36k Btu/hr)

If the supply cord is damaged, it must be replaced by a special cord or assembly available from the manufacturer of its service agent.

WARNING:
Make sure that the screws of the terminal are free from looseness.

Electrical Wiring

1. All wiring must comply with LOCAL REGULATIONS.
2. Select a power source that is capable of supplying the current required by the air conditioner.
3. Feed the power source to the unit via a distribution switch board designed for this purpose.
4. The terminal screws inside the control box may be loose due to vibration during transport. Check the screws for loose connection. (Running the air conditioner with loose connection can overload and damage electrical components.)
5. Always ground the air conditioner with a grounding wire and connector to meet the LOCAL REGULATION.

CAUTION:

- **The circuit diagram is not subject to change without notice.**
- **Be sure to connect wires according to the wiring diagram.**
- **Connect the wires firmly, so that not to be pulled out easily.**
- **Connect the wires according to color codes by referring the wiring diagram.**
- **The Power cord connected to the unit should be selected according to the following specifications.**

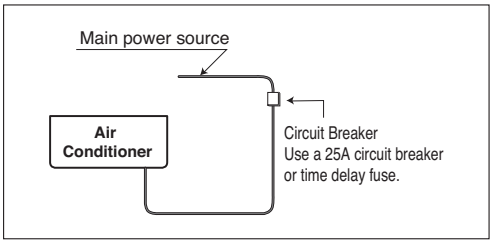

Connecting the cable to Outdoor Unit

1. Remove the Cover control from the unit by loosening a screw. Connect the wires to the terminals on the control board individually as following.
2. Secure the cable onto the control board with the holder (clamper).
3. Refix the cover control to the original position with the screw.
4. Use a recongnized circuit breaker between the power source and the unit. A disconnection device to adequately disconnect all supply lines must be fitted.

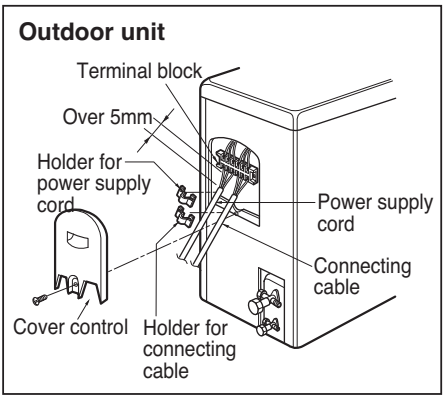

Connecting Pipes to the Indoor Unit

Preparation of Piping

Main cause of gas leakage is defect in flaring work. Carry out correct flaring work in the following procedure.

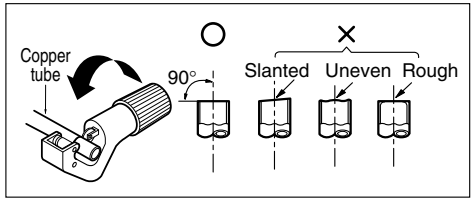

1. Cut the pipes and the cable.

- Use the accessory piping kit or the pipes purchased locally.
- Measure the distance between the indoor and the outdoor unit.
- Cut the pipes a little longer than measured distance.
- Cut the cable 1.5m longer than the pipe length.

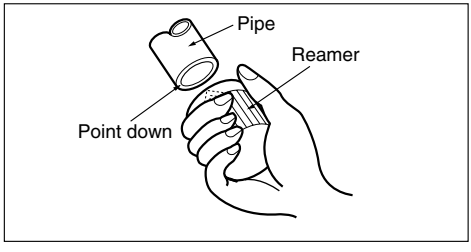

2. Burrs removal

- Completely remove all burrs from the cut cross section of pipe/tube.
- Put the end of the copper tube/pipe to downward direction as you remove burrs in order to avoid to let burrs drop in the tubing.

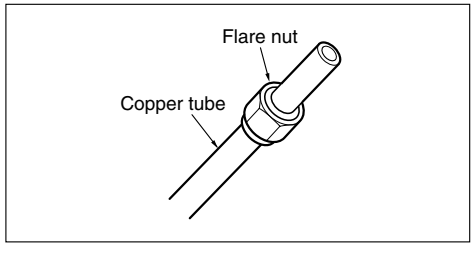

3. Putting nut on

- Remove flare nuts attached to indoor and outdoor units, than put them on pipe/tube having completed burr removal.
  (Not possible to put them on after flaring work)

4. Flaring work

- Carry out flaring work using dedicated flaring tool for R-410A as shown below.

Outside diameter	"A"
1/4"	1.1~1.3 mm
3/8"	1.5~1.7 mm
1/2"	1.6~1.8 mm
5/8"	1.6~1.8 mm
3/4"	1.9~2.1 mm

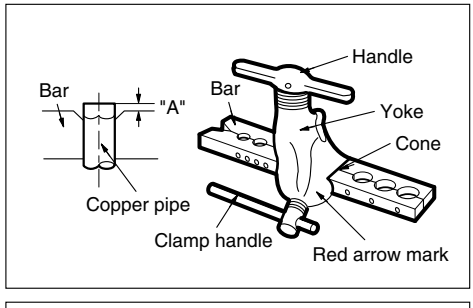

Firmly hold copper tube in a bar(or die) as indicated dimension in the table above.

5. Check

- Compare the flared work with figure below.
- If flare is noted to be defective, cut off the flared section and do flaring work again.

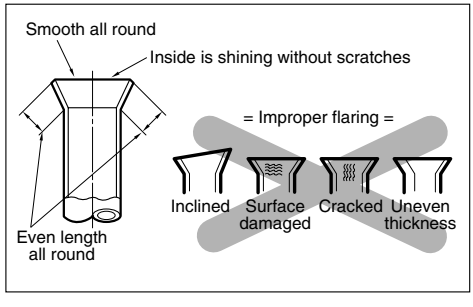

Piping Connection

1. Form the piping according to its routing. Avoid bending and bending back the same piping point more than three times. (This will result in hardening the pipe.)
2. After deforming the piping, align centers of the union fitting of the indoor unit and the piping, and tighten them firmly with wrenches.
3. Connect pipe to the service valve or ball valve which is located below the outdoor unit.
4. After completing the piping connection, be sure to check if there is gas leakage in indoor and outdoor connection.

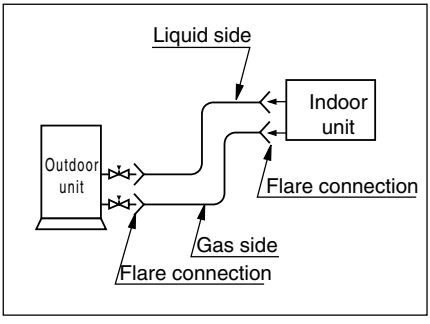

Vacuum drying

After completing the piping connection, execute vacuum drying for the connecting piping and the indoor unit.
The vacuum drying must be carried out using the service ports of both the liquid and gas side valves.

CAUTION: Use two wrenches and tighten with regular torque.'

Outside diameter		torque
mm	inch	kgf·m
Ø6,35	1/4	1.8~2.5
Ø9,52	3/8	3.4~4.2
Ø12,7	1/2	5.5~6.6
Ø15,88	5/8	6.3~8.2
Ø19,05	3/4	9.9~12.1

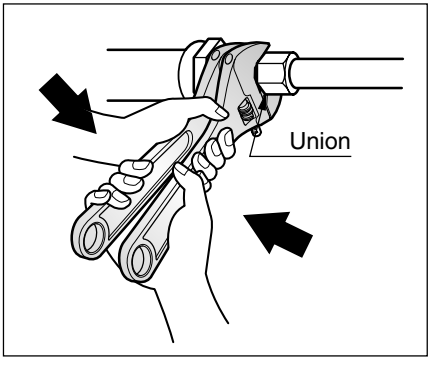

Installation to Decorative Panel

The decoration panel has its installation direction.

Before installing the decoration panel, always remove the paper template.

1. Temporarily fix two decoration panel fixing screws (hexagon M5 screw) on the unit body. (Tighten by amount 10mm in length.)
   The fixing screws (hexagon M5 screw) are included the indoor unit box.
2. Remove the air inlet grille from the decoration panel. (Remove the hook for the air inlet grille cord.)
3. Hook the decoration panel key hole (⊂⊃) on the screws fixed in step above, and slide the panel so that the screws reach the key hole edge.
4. Retighten completely two temporarily fixed screws and other two screws. (Total 4 screws)
5. Connect the louver motor connector and display connector.
6. After tightening these screws, install the air inlet grille (including the air filter).

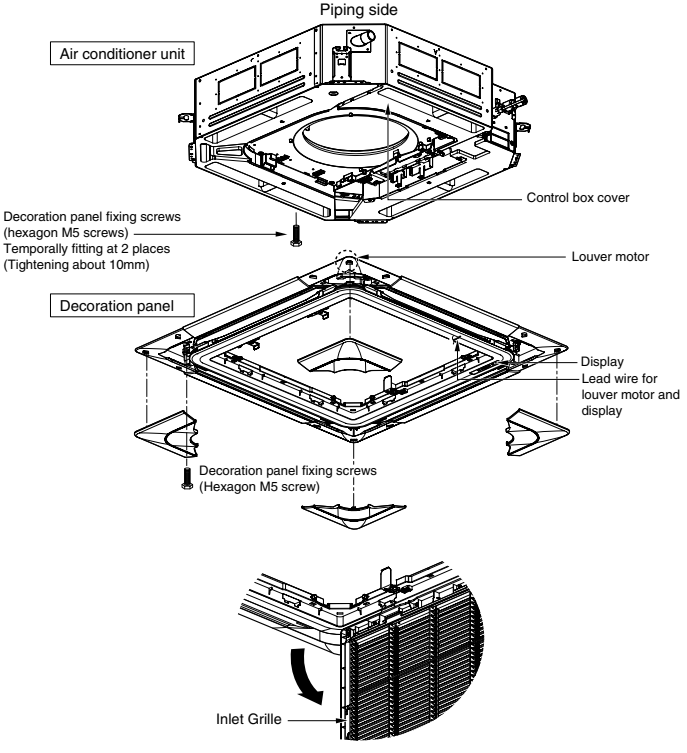

CAUTION : Install certainly the decoration panel. Cool air leakage causes sweating.
⇨Water drops fall.

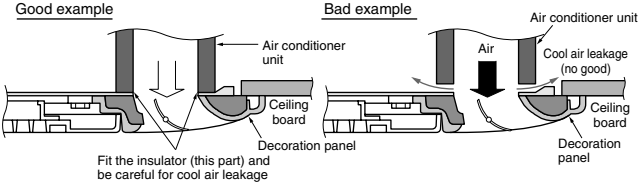

CAUTION: Install certainly the decorative panel.
Cool air leakage causes sweating. ⇨ Water drops fall.

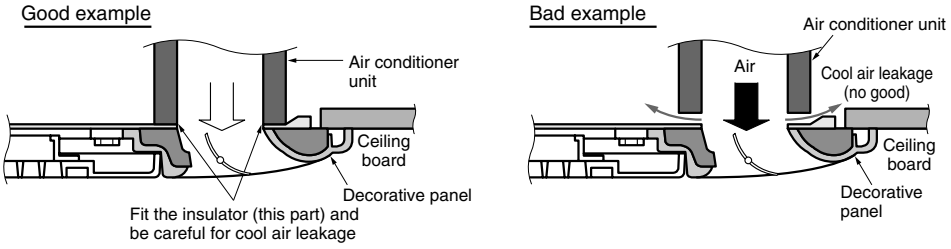

Indoor Unit Drain Piping

- Drain piping must have down-slope (1/50 to 1/100): be sure not to provide up-and-down slope to prevent reversal flow.
- During drain piping connection, be careful not to exert extra force on the drain port on the indoor unit.
- The outside diameter of the drain connection on the indoor unit is 32mm.

Piping material: Polyvinyl chloride pipe VP-25 and pipe fittings

- Be sure to execute heat insulation on the drain piping.
- Install the drain raising pipes at a right angle to the indoor unit and no more than 300mm from the unit.

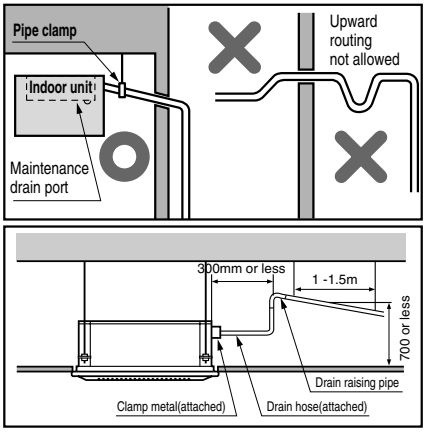

Heat insulation material: Polyethylene foam with thickness more than 8 mm.

Drain test

1. Cassette type

The air conditioner uses a drain pump to drain water.
Use the following procedure to test the drain pump operation:

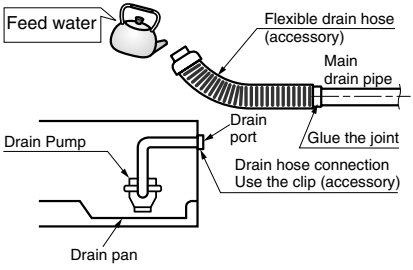

- Connect the main drain pipe to the exterior and leave it provisionally until the test comes to an end.
- Feed water to the flexible drain hose and check the piping for leakage.
- Be sure to check the drain pump for normal operating and noise when electrical wiring is complete.
- When the test is complete, connect the flexible drain hose to the drain port on the indoor unit.

2. Duct type

1) Remove the Air Filter.

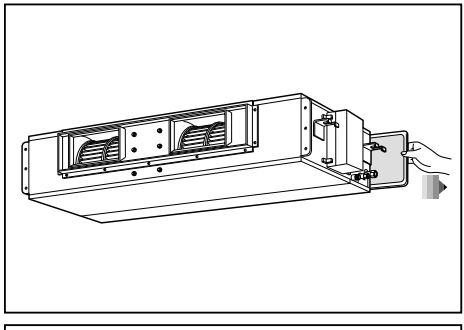

2) Check the drainage.

- Spray one or two glasses of water upon the evaporator.
- Ensure that water flows drain hose of indoor unit without any leakage.

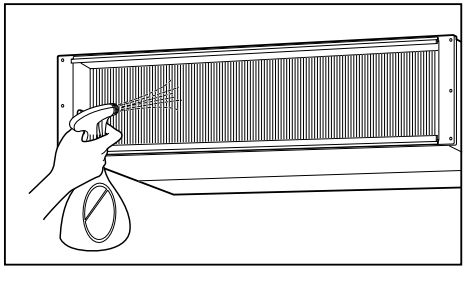

3. Convertible type

1. Set the air direction louvers up-and-down to the position(horizontally) by hand.

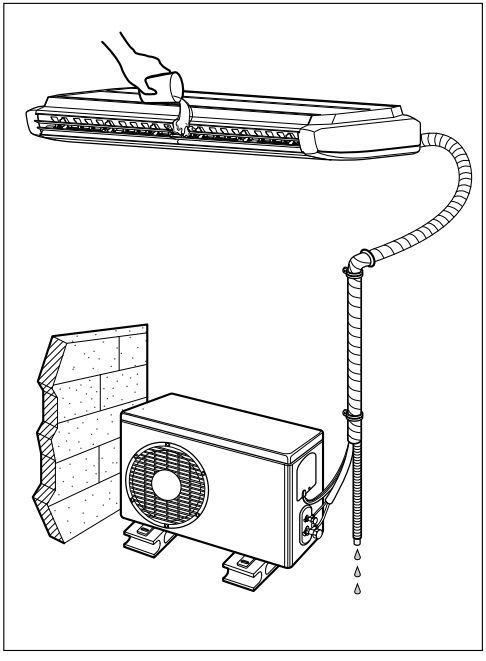

To check the drainage.

1. Pour a glass of water on the evaporator using a kettle.
2. Ensure the water flows through the drain hose of the indoor unit without any leakage and goes out the drain exit.

Drain piping

1. The drain hose should point downward for easy drain flow.

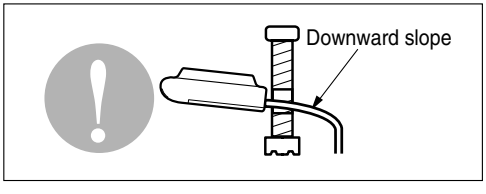

2. Do not make drain piping like the following.

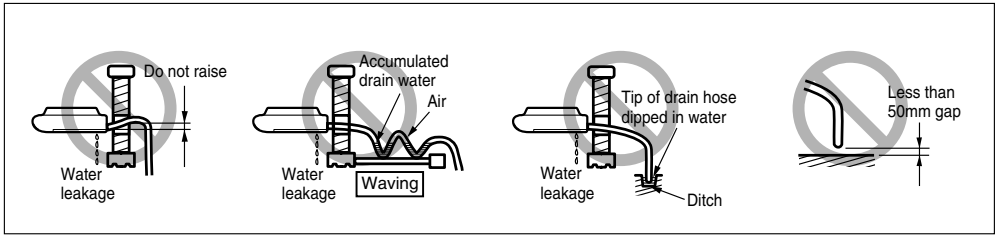

Heat insulation

1. Use the heat insulation material for the refrigerant piping which has an excellent heat-resistance (over 120°C).

2. Precautions in high humidity circumstance:
   This air conditioner has been tested according to the "KS Standard Conditions with Mist" and confirmed that there is not any default. However, if it is operated for a long time in high humid atmosphere (dew point temperature: more than 23°C), water drops are liable to fall. In this case, add heat insulation material according to the following procedure:

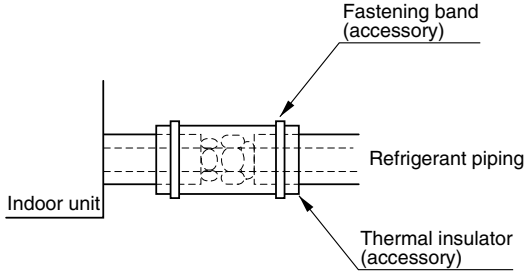

- Heat insulation material to be prepared... Adiabatic glass wool with thickness 10 to 20mm.
- Stick glass wool on all air conditioners that are located in ceiling atmosphere.

Forming the piping

Form the piping by wrapping the connecting portion of the indoor unit with insulation material and secure it with two kinds of vinyl tape.

- If you want to connect an additional drain hose, the end of the drain outlet should be routed above the ground. Secure the drain hose appropriately.

In cases where the outdoor unit is installed below the indoor unit perform the following.

1. Tape the piping, drain hose and connecting cable from down to up.
2. Secure the tapped piping along the exterior wall using saddle or equivalent.

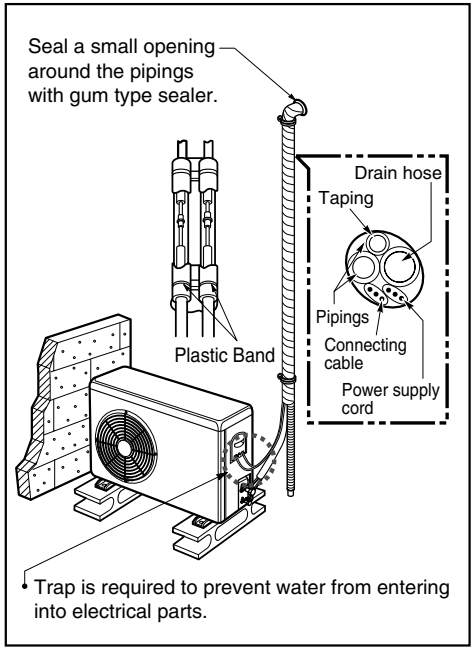

In cases where the Outdoor unit is installed above the Indoor unit perform the following.

1. Tape the piping and connecting cable from down to up.
2. Secure the taped piping along the exterior wall. Form a trap to prevent water entering the room.
3. Fix the piping onto the wall by saddle or equivalent.

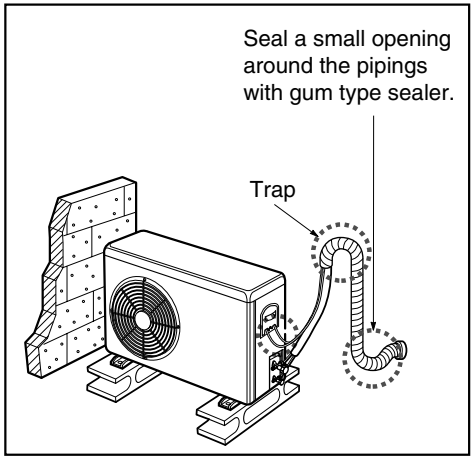

Settlement of outdoor unit

1. Anchor the outdoor unit with a bolt and nut[ø10mm(0.39in)] tightly and horizontally on a concrete or rigid mount.
2. When installing on the wall, roof or rooftop, anchor the mounting base securely with a nail or wire assuming the influence of wind and earthquake.
3. If the vibration of the unit is transmitted to the hose, secure the unit with an anti-vibration rubber.

Long pipe setting

1. Open the top cover of outdoor unit.

2. Set the ZONE SW1(SW01N) as below Fig.

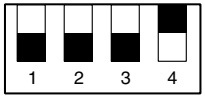

0 0 0 1

✻1 means S/W up.
0 means S/W down.

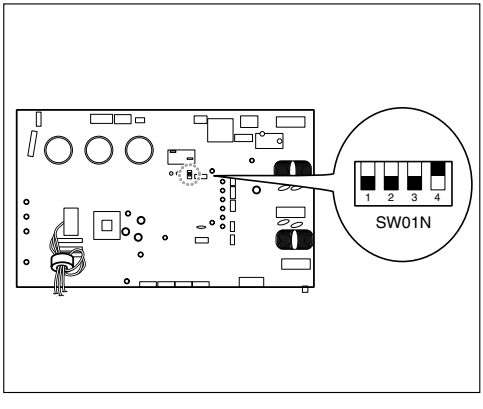

3. Close the top cover and check whether the product works normally.

WARNING: Do not open the top cover or Set the pipe length when operating the product.

Test running

1. PRECAUTIONS IN TEST RUNNING

- The initial power supply must provide at least 90% of the rated voltage. Otherwise, the air conditioner should not be operated.

CAUTION **① For test run, carry out the cooling operation firstly even during heating season. If heating operation is carried out firstly, it leads to the trouble of compressor. Then attention must be paid.**
② Carry out the test run more than 5 minutes without fail. (Test run will be cancelled 18 minutes later automatically)

- The test run is started by pressing the room temperature checking button and down timer button for 3 seconds at the same time.
- To cancel the test run, press any button.

CHECK THE FOLLOWING ITEMS WHEN INSTALLATION IS COMPLETE

- After completing work, be sure to measure and record trial run properties, and store measured data, etc.
- Measuring items are room temperature, outside temperature, suction temperature, blow out temperature, wind velocity, wind volume, voltage, current, presence of abnormal vibration and noise, operating pressure, piping temperature, compressive pressure.
- As to the structure and appearance, check following items.

- □ Is the circulation of air adequate?
- □ Is the draining smooth?
- □ Is the heat insulation complete (refrigerant and drain piping)?
- □ Is there any leakage of refrigerant?
- □ Is the remote controller switch operated?
- □ Is there any faulty wiring?
- □ Are not terminal screws loosened?

M4.....118N·cm{12kgf·cm} M5.....196N·cm{20kgf·cm}
M6.....245N·cm{25kgf·cm} M8.....588N·cm{60kgf·cm}

2. Connection of power supply

1. **Connect the power supply cord to the independent power supply.**
   • Circuit breaker is required.
2. **Operate the unit for fifteen minutes or more.**

3. Evaluation of the performance

1. Measure the temperature of the intake and discharge air.
2. Ensure the difference between the intake temperature and the discharge one is more than 8°C (Cooling) or reversely (Heating).

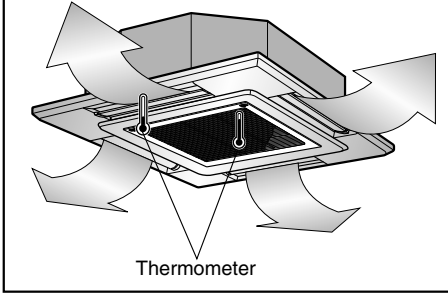

CAUTION: After the confirmation of the above conditions, prepare the wiring as follows:

1) Never fail to have an individual power specialized for the air conditioner. As for the method of wiring, be guided by the circuit diagram pasted on the inside of control box cover.

2) Provide a circuit breaker switch between power source and the unit.

3) The screw which fasten the wiring in the casing of electrical fittings are liable to come loose from vibrations to which the unit is subjected during the course of transportation. Check them and make sure that they are all tightly fastened. (If they are loose, it could give rise to burn-out of the wires.)

4) Specification of power source

5) Confirm that electrical capacity is sufficient.

6) Be sure that the starting voltage is maintained at more than 90 percent of the rated voltage marked on the name plate.

7) Confirm that the cable thickness is as specified in the power sources specification.
(Particularly note the relation between cable length and thickness.)

8) Never fail to equip a leakage breaker where it is wet or moist.

9) The following troubles would be caused by voltage drop-down.
- Vibration of a magnetic switch, damage on the contact point there of, fuse breaking, disturbance to the normal function of a overload protection device.
- Proper starting power is not given to the compressor.

10) Use only 1 remote-controller contained in the Cassette type indoor unit, when you combine to use both cassette type indoor unit and different kind of indoor unit.
After setting the ESP value in the Duct Type Indoor Unit, the main power turns off and then remove the remote controller.

HAND OVER

Teach the customer the operation and maintenance procedures, using the operation manual (air filter cleaning, temperature control, etc.).

Optional Operation

1. Two Thermistor System

(1) Open the rear cover of the wired remote-controller to set the mode.

(2) Select one of three selectable modes as follows.

- Position 1: The room temperature is controlled by the thermistor of the main body.
- Position 2: The room themperature is controlled by the thermistor of the wired remote-controller, control the temperature according to the position of wired remote-controller.
- Position 3: The room temperature is controlled by lower temperature between the temperature of main body and of remote-controller sensor.

(3) Move the slide switch to set position.

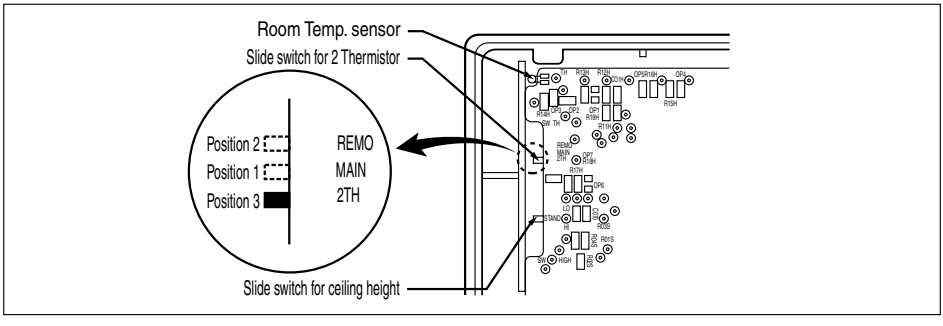

(4) Close the rear cover and check if it works normally.

CAUTION:

- **Select the position after counselling with a customer.**
- **In case of cooling mode, room temperature is controlled by the main body sensor.**
- **To control the room temperature by a wired remote controller, install controller(room temp. sensor) to sense the temperature more accurately.**
- **Manufactured in the position 3.**

2. Adjusting air volume to the height of ceiling (Cassette type)

You can choose the RPM(or air volume) of indoor motor according to the height of ceiling to supply the comfortable atmosphere to consumers.

Procedure

1. Choose the selectable position in the table after measuring the height of ceiling.

Ceiling height	Mode of slide switch	Change of air volume	Remark
more than 3.3m	High Ceiling	Increasing	Manufactured in standard mode
2.7~3.3m	Standard	-	
less than 2.7m	Low Ceiling	Decreasing	

2. In the case of changing the height as "high" or "low", open the rear cover of the wired remote-controller.
3. Move the slide switch to the set position.

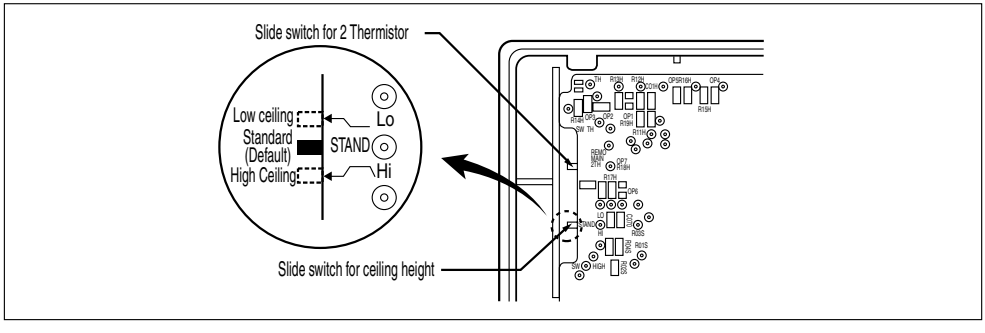

4. Close the rear cover and check if it works normally.

3. E.S.P.(External Static Pressure) Setting (Duct type)

(1) Open the rear cover of the wired remote-controller to set the mode.
(2) Select one of three selectable modes as follows.

■ Without Zone System

1. Position V-H, F-H:
   • This position sets the maximum E.S.P as a default set.
2. Position V-L:
   • This position sets the minimum E.S.P as a default set.

■ With Zone System

1. Position V-H:
   • Maximum E.S.P setting & Fan speed is varied according to the state of dampers by micom.
2. Position F-H:
   • Maximum E.S.P setting & Fan speed doesn't vary according to the opening & Closing of dampers.
3. Position V-L:
   • Minimum E.S.P setting & Fan speed is varied according to the state of dampers by micom.

* Maximum : 24k-6mmAq
Minimum : 0mmAq

(3) Move the slide switch to set position.

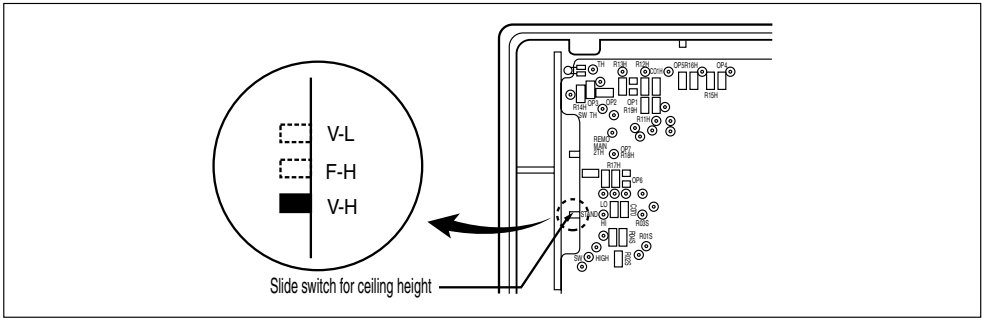

(4) Close the rear cover and check if it works normally.

CAUTION:
• Select the position after checking duct work and E.S.P of the unit.
• Maunfactured in the position F-H.

4. How to Set E.S.P?

Procedure of RPM change:

Ex) External Static pressure is 6mmAq for 36k.

• To protect the unit, compressor is designed to be off during E.S.P. setting.

1 Push the "On/Off" button.
The unit will start.

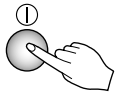

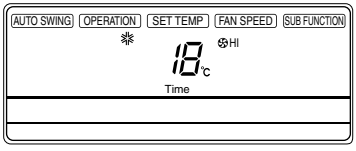

2 Push the "Timer" and "Wind" button simultaneously for more then 3 seconds.



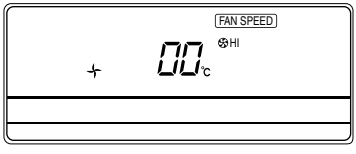

3 Push the "Up" of "Down" button for E.S.P adjustment.
And, adjust the number which you want.(In this example, the number is "220". Refer to the table 1 on the next page.)

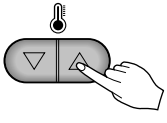

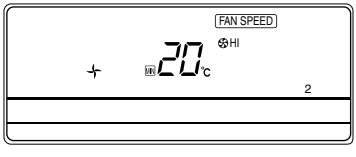

Note: The range of selection is from 1~254. Since, the display is two Digit only.
If the range selection is above 100 then the third digit will appear in the screen as shown.

4 Shift the fan speed mode by pressing the fan speed button.
And then, Adjust numbers of next steps by repeating the stage 3.
(In this example, the numbers are "235" and "243" respectly)

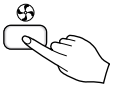

5 Push the "Timer" and "Wind" button simultaneously for more than 3 seconds.
Then, Wind Data is memorized by the EEPROM of the main PCB.

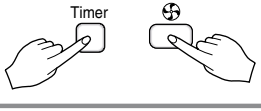

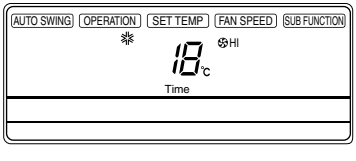

[Table. 1]

Static Pressure(mmAq)			**0**	**2**	**4**	**6**	**8**	**10**	**12**	**14**	**15**
Model Name	Step	CMM(CFM)	Setting Value								
24 k	High	18(636)	220	205	190	50	1				
	Med	16.5(583)	235	230	220	200	100				
	Low	14(494)	250	240	235	230	210				
30 k	High	26.5(936)	153	150	150	148	130	1			
	Med	23(812)	173	173	175	175	170	155			
	Low	20(706)	190	190	190	190	190	190			
36 k	High	32(1130)	230	230	225	220	150	1			
	Med	29(1024)	240	238	237	235	230	220			
	Low	26.5(936)	245	245	243	243	240	240			

Note: 1. Be sure to set the value refering table 1. Unexpected set value will cause malfunction.

2. Table 1 is based at 230V. According to the fluctuation of voltage, air flow rate varies.

Installation guide at the seaside

⚠CAUTION

1. Air conditioners should not be installed in areas where corrosive gases, such as acid or alkaline gas, are produced.
2. Do not install the product where it could be exposed to sea wind (salty wind) directly. It can result corrosion on the product. Corrosion, particularly on the condenser and evaporator fins, could cause product malfunc-tion or inefficient performance.
3. If outdoor unit is installed close to the seaside, it should avoid direct exposure to the sea wind. Otherwise it needs additional anticorrosion treatment on the heat exchanger.

Selecting the location(Outdoor Unit)

1) If the outdoor unit is to be installed close to the seaside, direct exposure to the sea wind should be avoided. Install the outdoor unit on the opposite side of the sea wind direction.

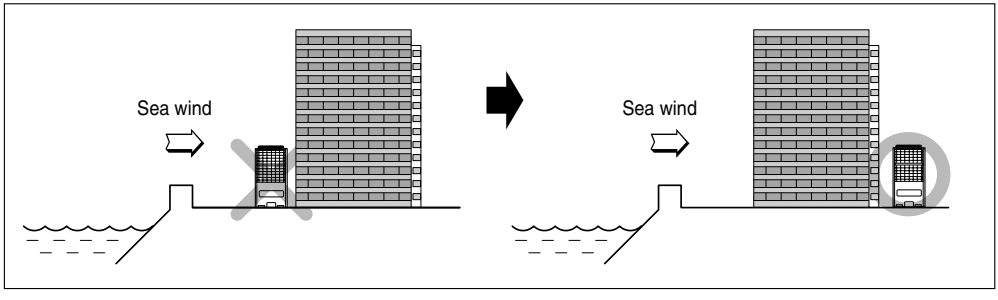

2) In case, to install the outdoor unit on the seaside, set up a windbreak not to be exposed to the sea wind.

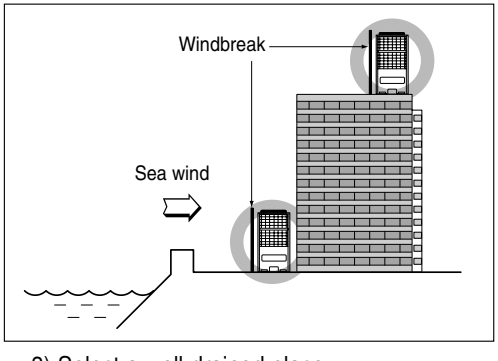

- It should be strong enough like concrete to prevent the sea wind from the sea.
- The height and width should be more than 150% of the outdoor unit.
- It should be keep more than 70 cm of space between outdoor unit and the windbreak for easy air flow.

3) Select a well-drained place.

❊ 1. If you can't meet above guide line in the seaside installation, please contact LG Electronics for the additional anticorrosion treatment.

2. Periodic (more than once/year) cleaning of the dust or salt particles stuck on the heat exchanger by using water


LG
Life's Good