LG
Life's Good

ENGLISH

TÜRKÇE

INSTALLATION MANUAL

AIR CONDITIONER

- Please read this installation manual completely before installing the product.
- Installation work must be performed in accordance with the national wiring standards by authorized personnel only.
- Please retain this installation manual for future reference after reading it thoroughly.

TYPE : WALL MOUNTED

www.lg.com

P/NO : MFL67737208

CONTENTS

Installation Requirements

Safety Precautions.....3

Introduction.....6

Symbols used in this manual.....6

Installation.....7

Installation Parts 7

Installation Tools 7

Installation Map.....8

Select the best Location 8

Fixing Installation Plate 9

Drill a Hole in the Wall.....9

Flaring Work.....10

Installation of Indoor Unit.....11

Connecting the Cables.....15

Checking the Drainage 16

Test Running.....17

Required Parts

- ❏ Some pieces of type "A" screws
- ❏ Connecting cable
- ❏ Installation guide map
- ❏ Pipes: Gas side
  Liquid side
- ❏ Insulation materials
- ❏ Additional drain pipe
  (Outer diameter .....15.5mm)
- ❏ Some pieces of type "B" screws
- ❏ Some pieces of type "C" screws

Required Tools

- ❏ Level gauge
- ❏ Screw driver
- ❏ Electric drill
- ❏ Hole core drill(ø70mm)
- ❏ Horizontal meter
- ❏ Flaring tool set
- ❏ Specified torque wrenches
  1.8kg.m, 4.2kg.m, 5.5kg.m,
  6.6kg.m
  (different depending on model No.)
- ❏ Spanner.....Half union
- ❏ A glass of water
- ❏ Hexagonal wrench(4mm)
- ❏ Gas-leak detector
- ❏ Vacuum pump
- ❏ Gauge manifold
- ❏ Owner's manual
- ❏ Thermometer
- ❏ Remote controller holder

ENGLISH

Safety Precautions

To prevent the injury of the user or other people and property damage, the following instructions must be followed.

■ Be sure to read before installing the air conditioner.
■ Be sure to observe the cautions specified here as they include important items related to safety.
■ Incorrect operation due to ignoring instruction will cause harm or damage. The seriousness is classified by the following indications.

⚠WARNING	This symbol indicates the possibility of death or serious injury.
⚠CAUTION	This symbol indicates the possibility of injury or damage to properties only.

■ The meanings of the symbols used in this manual are as shown below.

⃠	**Be sure not to do.**
❗	**Be sure to follow the instruction.**

⚠WARNING

■ Installation

Always perform grounding.

- Otherwise, it may cause electrical shock.

Don't use a power cord, a plug or a loose socket which is damaged.

- Otherwise, it may cause a fire or electrical shock.

For installation of the product, always contact the service center or a professional installation agency.

- Otherwise, it may cause a fire, electrical shock, explosion or injury.

Securely attach the electrical cover to indoor and pipe cover to outdoor unit.

- If the electrical part cover to indoor unit and pipe cover to outdoor unit are not attached securely, it could result in a fire or electric shock due to dust, water, etc.

Always install an air leakage breaker and a dedicated switching board.

- No installation may cause a fire and electrical shock.

Do not keep or use flammable gases or combustibles near the air conditioner.

- Otherwise, it may cause a fire or the failure of product.

Ensure that an installation frame of the outdoor unit is not damaged due to use for a long time.

- It may cause injury or an accident.

Do not disassemble or repair the product randomly.

- It will cause a fire or electrical shock.

There is a risk of fire and explosion.

- Inert gas (nitrogen) should be used when you check plumbing leaks, cleaning or repairs of pipes etc. If you are using combustible gases including oxygen, product may have the risk of fires and explosions.

Do not install the product at a place that there is concern of falling down.

- Otherwise, it may result in personal injury.

Use caution when unpacking and installing.

- Sharp edges may cause injury.

Operation

Do not share the outlet with other appliances.

- It will cause an electric shock or a fire due to heat generation.

Do not use the damaged power cord.

- Otherwise, it may cause a fire or electrical shock.

Do not modify or extend the power cord randomly.

- Otherwise, it may cause a fire or electrical shock.

Take care so that the power cord may not be pulled during operation.

- Otherwise, it may cause a fire or electrical shock.

Unplug the unit if strange sounds, smell, or smoke comes from it.

- Otherwise, it may cause electrical shock or a fire.

Keep the flames away.

- Otherwise, it may cause a fire.

Take the power plug out if necessary, holding the head of the plug and do not touch it with wet hands.

- Otherwise, it may cause a fire or electrical shock.

Do not use the power cord near the heating tools.

- Otherwise, it may cause a fire and electrical shock.

Do not open the inlet of the indoor/outdoor unit during operation.

- Otherwise, it may cause electrical shock and failure.

Do not allow water to run into electrical parts.

- Otherwise, it may cause the failure of machine or electrical shock.

Hold the plug by the head when taking it out.

- It may cause electric shock and damage.

Never touch the metal parts of the unit when removing the filter.

- They are sharp and may cause injury.

Do not step on the indoor/outdoor unit and do not put anything on it.

- It may cause an injury through dropping of the unit or falling down.

Do not place a heavy object on the power cord.

- Otherwise, it may cause a fire or electrical shock.

When the product is submerged into water, always contact the service center.

- Otherwise, it may cause a fire or electrical shock.

Take care so that children may not step on the outdoor unit.

- Otherwise, children may be seriously injured due to falling down.

⚠ CAUTION

■ Installation

Install the drain hose to ensure that drain can be securely done.

- Otherwise, it may cause water leakage.

Install the product so that the noise or hot wind from the outdoor unit may not cause any damage to the neighbors.

- Otherwise, it may cause dispute with the neighbors.

Always inspect gas leakage after the installation and repair of product.

- Otherwise, it may cause the failure of product.

Keep level parallel in installing the product.

- Otherwise, it may cause vibration or water leakage.

Thickness of copper pipes used are as shown “Flaring work” Table.

- Never use copper pipes thinner than that in the table even when it is available on the market.

Do not use copper pipes having a collapsed.

- Otherwise, the expansion valve or capillary tube may become blocked with contaminants.

For R410A model, use piping, flare nut and tools which is specified for R410A refrigerant.

- Using of (R22) piping, flare nut and tools may cause abnormally high pressure in the refrigerant cycle (piping), and possibly result in explosion and injury.

It is desirable that the amount of residual oil less than 40 mg/10m.

■ Operation

Avoid excessive cooling and perform ventilation sometimes.

- Otherwise, it may do harm to your health.

Use a soft cloth to clean. Do not use wax, thinner, or a strong detergent.

- The appearance of the air conditioner may deteriorate, change color, or develop surface flaws.

Do not use an appliance for special purposes such as preserving animals vegetables, precision machine, or art articles.

- Otherwise, it may damage your properties.

Do not place obstacles around the flow inlet or outlet.

- Otherwise, it may cause the failure of appliance or an accident.

Introduction

Symbols used in this Manual

This symbol alerts you to the risk of electric shock.

This symbol alerts you to hazards that may cause harm to the air conditioner.

NOTICE **This symbol indicates special notes.**

ENGLISH

Installation

Read carefully, and then follow step by step.

Installation Parts

Installation plate		Type "A" screw
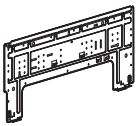 The feature can be changed according a type of model.		
Type "B" screw	Type "C" screw	Remote control holder
		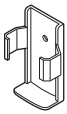

Installation Tools

Figure	Name	Figure	Name
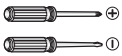	Screw driver		Multi-meter
	Electric drill		Hexagonal wrench
	Measuring tape, Knife	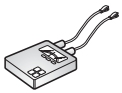	Ammeter
	Hole core drill		Gas-leak detector
	Spanner	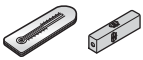	Thermometer, Level
	Torque wrench		Flaring tool set

Installation Map

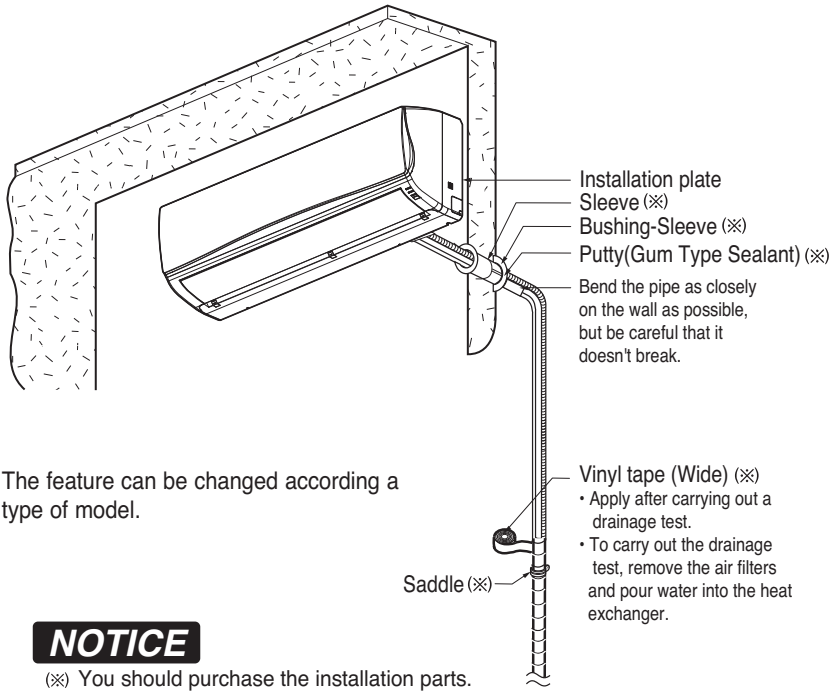

- The feature can be changed according a type of model.

NOTICE

(※) You should purchase the installation parts.

Select the best Location

Indoor unit

1. There should not be any heat or steam near the unit.
2. Select a place where there are no obstacles around of the unit.
3. Make sure that condensation drainage can be conveniently routed away.
4. Do not install near a doorway.
5. Ensure that the interval between a wall and the left (or right) of the unit is more than 100mm. The unit should be installed as high as possible on the wall, allowing a minimum of 200mm from ceiling.
6. Use a metal detector to locate studs to prevent unnecessary damage to the wall.

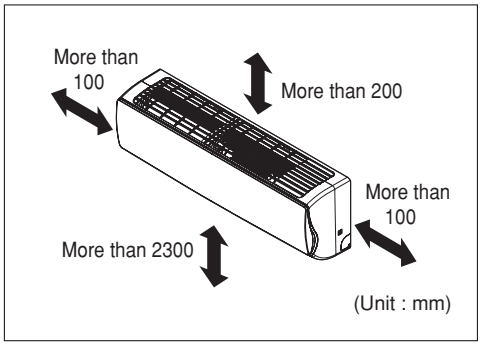

⚠ CAUTION

Install the indoor unit on the wall where the height from the floor is more than 2300mm.

Fixing Installation Plate

1. Measure the wall and mark the centerline. It is also important to use caution concerning the location of the installation plate. Routing of the wiring to power outlets is through the walls typically. Drilling the hole through the wall for piping connections must be done safely.

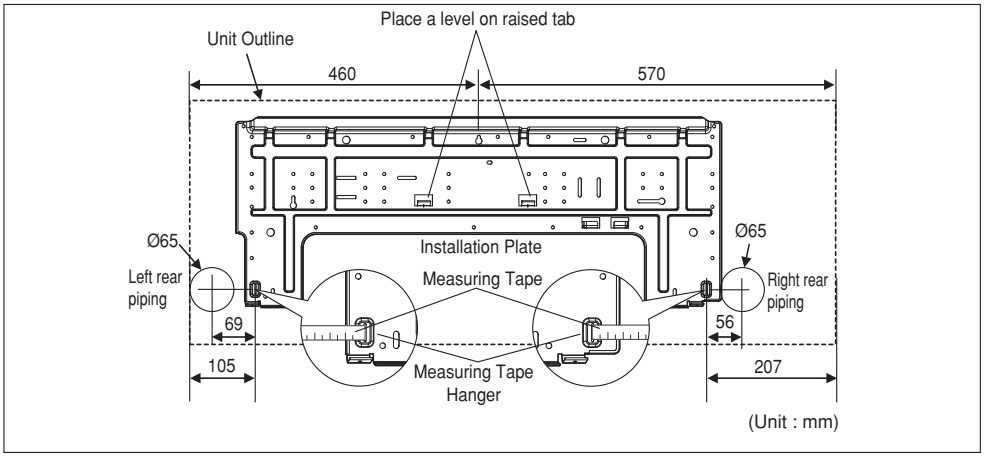

2. The wall you select should be strong and solid enough to prevent vibration
   - Mount the installation plate on the wall with type "A" screws. If mounting the unit on a concrete wall, use anchor bolts.
   - Mount the installation plate horizontally by aligning the centerline using Horizontal meter .

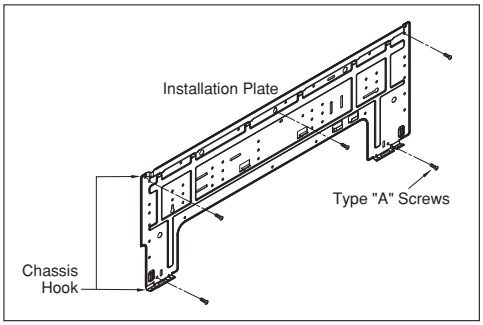

Drill a Hole in the Wall

- Drill the piping hole with a ø65 hole core drill. Drill the piping hole at either the right or the left with the hole slightly slanted to the outdoor side.

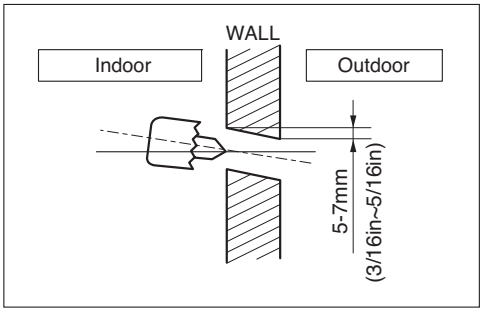

Flaring Work

Main cause for gas leakage is due to defect of flaring work. Carry out correct flaring work in the following procedure.

Cut the pipes and the cable.

1. Use the piping kit accessory or the pipes purchased locally.
2. Measure the distance between the indoor and the outdoor unit.
3. Cut the pipes a little longer than measured distance.
4. Cut the cable 1.5m longer than the pipe length.

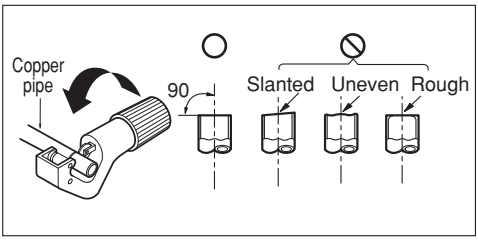

Burrs removal

1. Completely remove all burrs from the cut cross section of pipe/tube.
2. While removing burrs put the end of the copper tube/pipe in a downward direction while removing burrs location is also changed in order to avoid dropping burrs into the tubing.

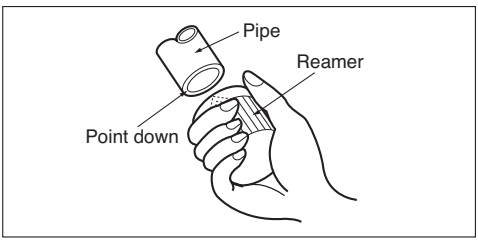

Putting nut on

• Remove flare nuts attached to indoor and outdoor unit, then put them on pipe/tube having completed burr removal.
(not possible to put them on after finishing flare work)

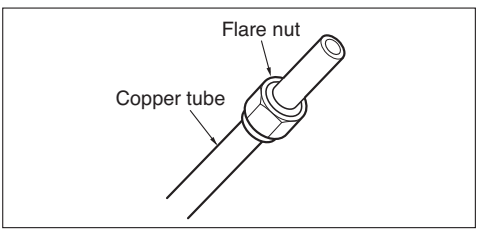

Flaring work

1. Firmly hold copper pipe in a bar with the dimension shown in below table table below.
2. Carry out flaring work with the flaring tool.

Outside diameter		A	Thickness
mm	inch	mm	mm
Ø6.35	1/4"	1.1~1.3	0.7
Ø9.52	3/8"	1.5~1.7	0.8
Ø12.7	1/2"	1.6~1.8	0.8
Ø15.88	5/8"	1.6~1.8	1.0
Ø19.05	3/4"	1.9~2.1	1.0

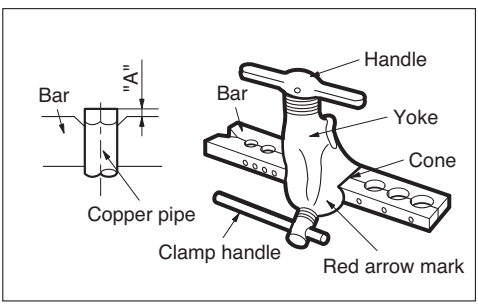

Check

1. Compare the flared work with the figure by.
2. If a flared section is defective, cut it off and do flaring work again.

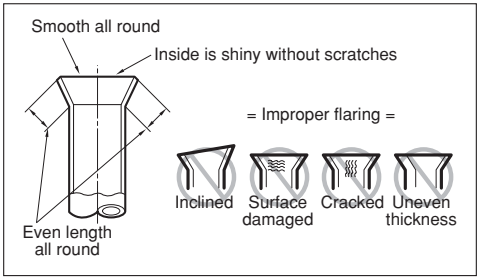

Installation of Indoor Unit

1. Hook the indoor unit onto the upper portion of the installation plate.(engage the three hooks at the top of the indoor unit with the upper edge of the installation plate) Ensure that the hooks are properly seated on the installation plate by moving it left and right

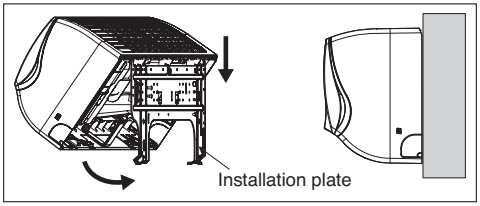

2. Unlock the tubing holder from the chassis and mount between the chassis and installation plate in order to separate the bottom side of the indoor unit from the wall

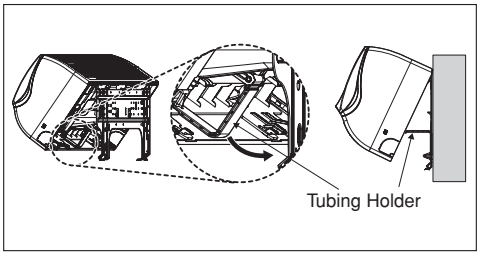

Connecting the Piping

1. Pull the screw cap at the bottom of the indoor unit
2. Remove the chassis cover from the unit by loosing 3 screws
   (Be careful not to scratch Horizontal Vane Main!)

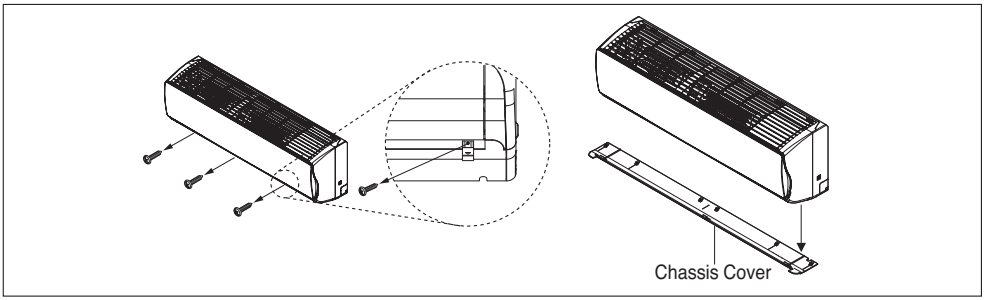

3. Pull back the tubing holder.
4. Remove pipe port cover and position the tubing.

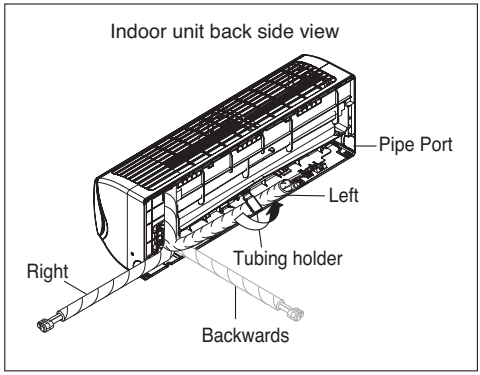

⚠ CAUTION

Installation Information. For right piping. Follow the instruction below.

Good case

- Press on the tubing cover and unfold the tubing to downward slowly. And then bend to the left side slowly.

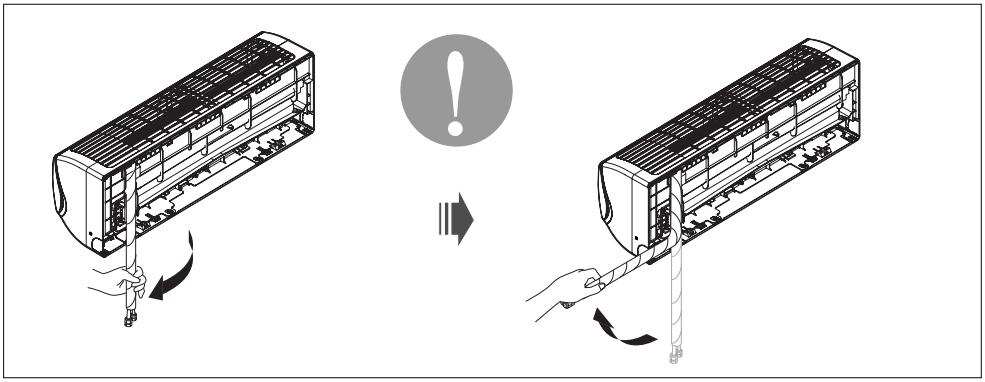

Bad case

- Following bending case from right to left directly may cause damage to the tubing.

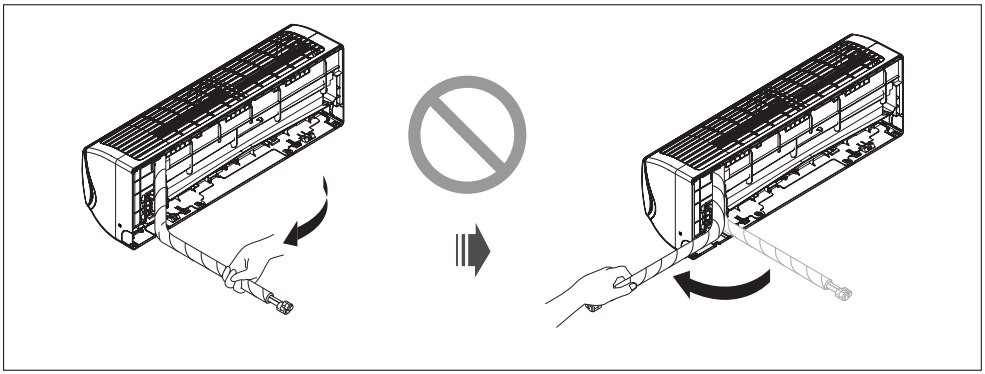

⚠ CAUTION

If the drain hose is routed inside the room insulate the hose with an insulation material* so that dripping from sweating (condensation) will not damage furniture or floors.

* Foamed polyethylene or equivalent is recommended.

<Left side piping>

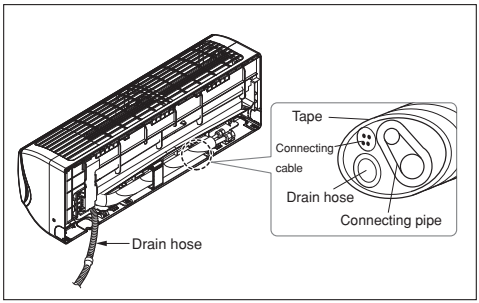

<Right side piping>

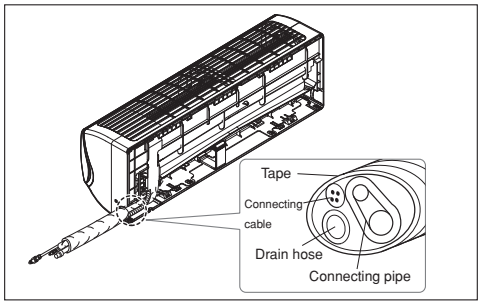

Connecting the installation pipe and drain hose to the indoor unit.

1. Align the center of the pipes and sufficiently tighten the flare nut by hand

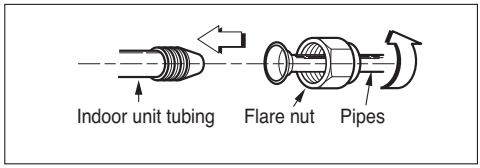

2. Tighten the flare nut with a wrench

Outside diameter		Torque
mm	inch	kgf·m
Ø6.35	1/4	1.8~2.5
Ø9.52	3/8	3.4~4.2
Ø12.7	1/2	5.5~6.5
Ø15.88	5/8	6.3~8.2
Ø19.05	3/4	9.9~12.1

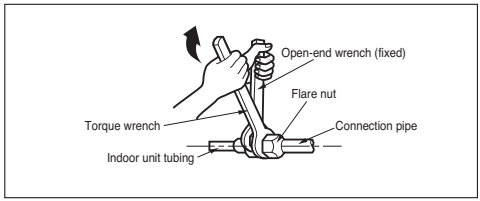

3. When needed to extend the drain hose of indoor unit, assembly the drain pipe as shown on the drawing

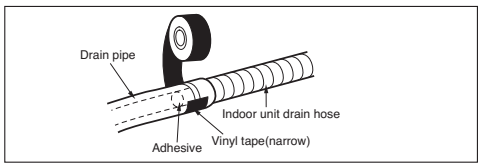

Wrap the insulation material around the connecting portion.

1. Overlap the connection pipe insulation material and the indoor unit pipe insulation material. Bind them together with vinyl tape so that there may be no gap.
2. Set the tubing cutting line upward.
   Wrap the area which accommodates the rear piping housing section with vinyl tape.
3. Bundle the piping and drain hose together by wrapping them with vinyl tape sufficient enough to cover where they fit into the rear piping housing section.

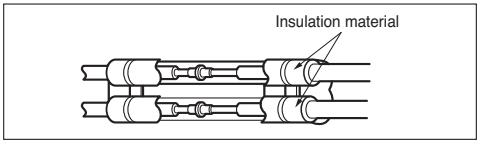

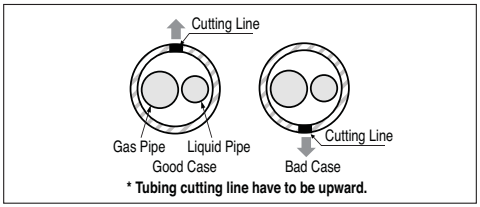

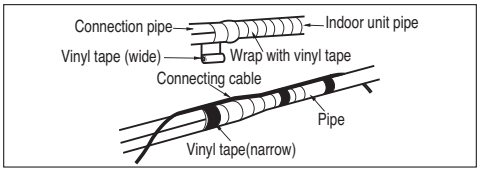

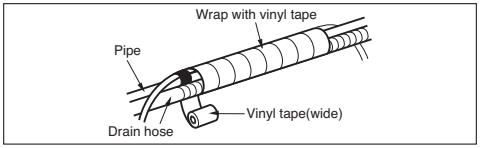

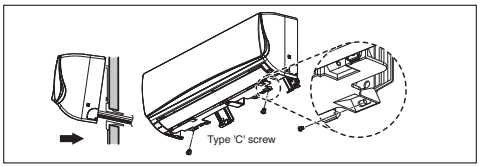

Finishing the indoor unit installation

1. Mount the tubing holder in the original positon.
2. Ensure that the hooks are properly seated on the installation plate by moving it left and right.
3. Press the lower left and right sides of the unit against the installation plate until the hooks engage into their slots (clicking sound).
4. Finish the assembly by screwing the unit to the installation plate by using two pieces of type "C" screws. And assemble a chassis cover.

Connecting the Cables

Indoor unit

Connect the cable to the indoor unit by connecting the wires to the terminals on the control board individually according to the outdoor unit connection. (Ensure that the color of the wires of the outdoor unit and the terminal No. are the same as those of the indoor unit.)

1. Insert the connecting cable through the bottom side of indoor unit and connect the cable (You can see detail contents in 'Connecting the cables' section)
2. Secure the cable onto the control board with the cable retainer.
3. Tape the tubing pipe, drain hose and the connection cable. Be sure that the drain hose is located at the lowest side of the bundle. Locating at the upper side can cause overflow from the drain pan through the inside of the unit.

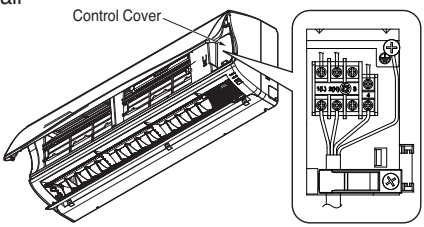

❊ Field wiring shall be done such that the currentcarrying conductors become taut before the earthing conductor if the cord slips out of the cord anchorage.

Checking the Drainage

To check the drainage.

1. Pour a glass of water on the evaporator.
2. Ensure the water flows through the drain hose of the indoor unit without any leakage and goes out the drain exit.

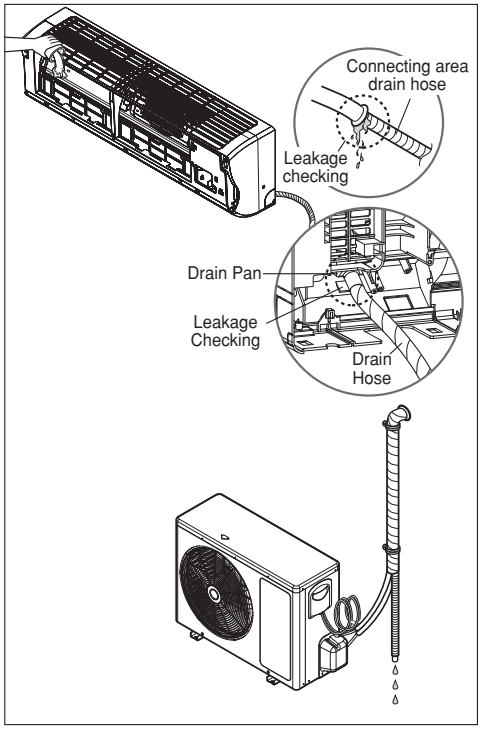

Drain piping

1. The drain hose should point downward for easy drain flow.

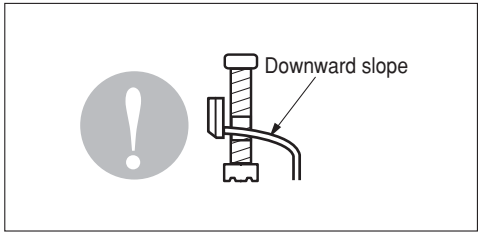

2. Do not make drain piping like the following.

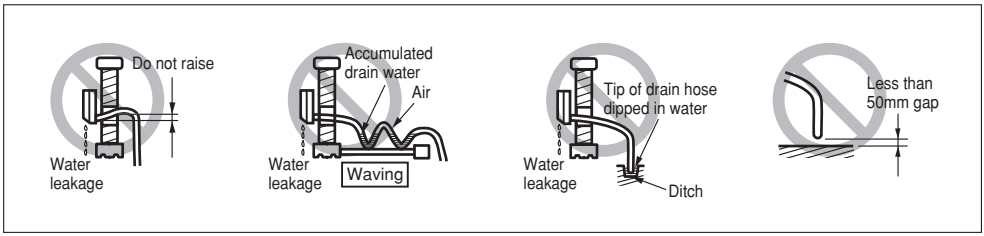

Test Running

1. Check that all tubing and wiring are properly connected.
2. Check that the gas and liquid side service valves are fully open.

Prepare remote controller

1. Remove the battery cover by pulling it according to the arrow direction.
2. Insert new batteries making sure that the (+) and (–) of battery are installed correctly.
3. Reattach the cover by pushing it back into position.

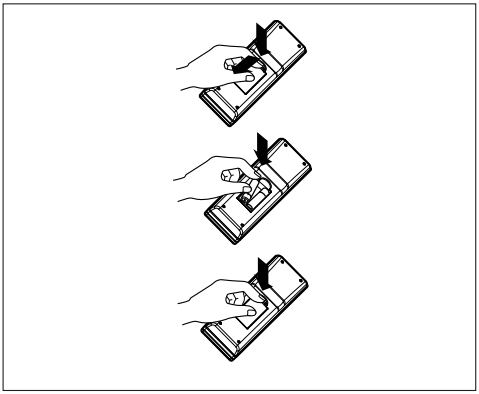

NOTICE

- Use 2 AAA(1.5volt) batteries. Do not use rechargeable batteries.
- Remove the batteries from the remote controller if the system is not used for a long time.

Installation of filter

1. Pull out the triple filter and allergy free filter from the separately packed plastic bag.
2. Insert the triple filter into the left case and insert the allergy free filter into the right case.
3. Detach two nitto tapes from the plasma filter.

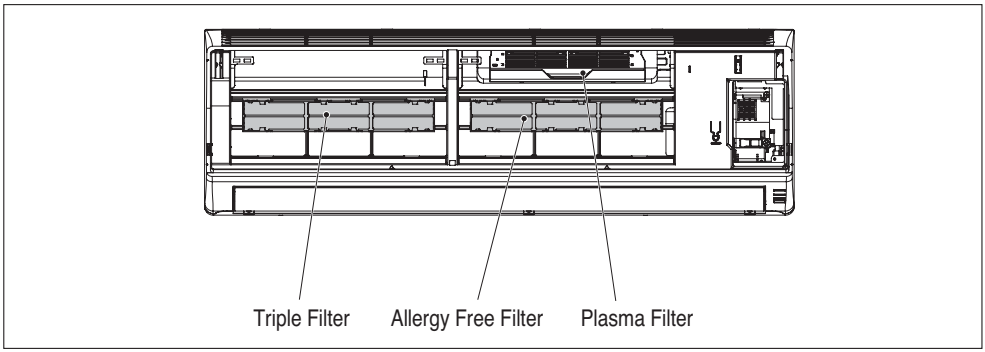

LG
Life's Good