LG
Life's Good

ENGLISH
ITALIANO
ESPAÑOL
FRANCAIS
DEUTSCH

INSTALLATION MANUAL

AIR CONDITIONER

- Please read this installation manual completely before installing the product.
- Installation work must be performed in accordance with the national wiring standards by authorized personnel only.
- Please retain this installation manual for future reference after reading it thoroughly.

TYPE : VENTILATOR

P/NO : 3828A20469K

www.lg.com

TABLE OF CONTENTS

Installation Requirements	Required Parts	Required Tools

Safety Precaution.....3

Introduction 6

Symbols Used in this manual 6

Feature Dimension Diagram 6

Installation 11

Installation Map .....11 — • **Screws** • **Nuts** • **Ceiling Fixing Bolt(M10~12)** • **Washer** — • **Screw Driver** • **Spanner**

Installation of Main Body ...14

Connection of Duct.....14 — • **Aluminium Tape** • **Screws** — • **Cutter**

Method to Connect Power Cord .....16 — • **Cutter**

How to Connect Remote Controller(Accessory) 17

Name and Function of Remote Controller 17

Installation instruction.....18 — • **Screw Driver**

Group control.....20

Installer Setting -How to enter installer setting mode 22

How to connect Central Controller(Accessory) 24

Trial Operation 25

Method to Operate and Select Air Volume –Ventilation Single Operation 25

Method to Operate and Select Air Volume – Interlinked Operation with Ventilation...26

In case of finding a problem at a trial operation.....27

Safety Precautions

To prevent injury to the user or other people and property damage, the following instructions must be followed.

■ Incorrect operation due to ignoring instruction will cause harm or damage. The seriousness is classified by the following indications.

⚠WARNING	This symbol indicates the possibility of death or serious injury.
⚠CAUTION	This symbol indicates the possibility of injury or damage.

■ Meanings of symbols used in this manual are as shown below.

	**Be sure not to do.**
	**Be sure to follow the instruction.**

⚠WARNING

■ Installation

Do not use a defective or underrated circuit breaker. Use this appliance on a dedicated circuit.

- There is risk of fire or electric shock.

For electrical work, contact the dealer, seller, a qualified electrician, or an Authorized Service Center.

- Do not disassemble or repair the product. There is risk of fire or electric shock.

Always ground the product.

- There is risk of fire or electric shock.

Install the panel and the cover of control box securely.

- There is risk of fire or electric shock.

Always install a dedicated circuit and breaker.

- Improper wiring or installation may cause fire or electric shock

Use the correctly rated breaker or fuse.

- There is risk of fire or electric shock.

Do not modify or extend the power cable.

- There is risk of fire or electric shock.

Do not install, remove, or re-install the unit by yourself (customer).

- There is risk of fire, electric shock, explosion, or injury.

Be cautious when unpacking and installing the product.

- Sharp edges could cause injury.

For installation, always contact the dealer or an Authorized Service Center.

- There is risk of fire, electric shock, explosion, or injury.

Do not install the product on a defective installation stand.

- It may cause injury, accident, or damage to the product.

Do not let the product run for a long time when the humidity is very high and a door or a window is left open.

- Moisture may condense and wet or damage furniture.

For re-installation of the installed product, always contact the dealer or an Authorized Service Center.

- There is risk of fire, electric shock, explosion or injury.

Do not open the maintenance cover of the main body during operation.

- Otherwise, it may cause electrical shock.

Use the outdoor air suction hole with the net installed to ensure that birds could not come in.

- Remove estrange things like the bird's nest. Otherwise, it may cause scarcity of indoor oxygen.

Install the air intake where polluted air can not be directly sucked in.

- It may cause various accidents, including suffocation, due to the suction of harmful gasses(CO, etc.)

Do not install this product in a refrigerated warehouse, heated swimming pool or other location where the temperature and humidity are significantly different.

- There is risk of electrical shock, malfunctioning.

Install this product in an environment where the temperature ranges from –10°C to +45°C and the relative humidity is less than 80%. It condensation is expected to form, heat up the fresh outside air using a duct heater etc.

Install this product in and environments where the outside air intake meets the following conditions: temperature range is between –15°C and +40°C and the relative humidity is 80% or less.

Use the designated electrical wires for the terminal board connections, and connect the wires securely so that they will not become disconnected. (Failure to ensure proper connections may cause fire.)

When passing metal ducts through wooden buildings clad with metal laths, wire laths or metal, these ducts must be installed in such a way that they will not make electrical contact with the metal laths, wire laths or metal sheets. (Power leakage can cause ignition)

■ Operation

Avoid fire equipment

- There is risk of fire.

When the product is soaked (flooded or submerged), contact an Authorized Service Center.

- There is risk of fire or eletric shock.

Don't touch a dedicated circuit or breaker with wet hands.

- There is risk of electric shock.

When the product is not be used for a long time, disconnect the power supply plug or turn off the breaker.

- There is risk of product damage or failure, or unintended operation.

Do not store or use flammable gas or combustibles near the product.

- There is risk of fire or failure of product.

When flammable gas leaks, turn off the gas and open a window for ventilation before turn the product on.

- Do not use the telephone or turn switches on or off. There is risk of explosion or fire

Be cautious that water could not enter the product.

• There is risk of fire, electric shock, or product damage.

Turn the breaker off when cleaning or maintaining the product.

• There is risk of electric shock.

The outside ducts must be tilted at a gradient (1/30 or more) down toward the outdoor area from the ventilator unit, and properly insulated. (The entry of rain water may cause power leaks, fire or damage to household property.)

Glove should be worn when doing the installation work. (There is risk of injury.)

⚠CAUTION

■ Installation

Don't connect the ground wire to the window frame or water cock.

• There is risk of electric shock.

Do not install the product at a smoky and oily place like kitchen or factory.

• Otherwise. oil may adhere to the filter or heating exchanger and cause trouble.

Install the product in an insulated space from outdoor air.

• In case of installing the product outside of the insulated layer, dewing occurs inside of the main body in winter.And it causes electrical shock or falling of condensed water.

Keep level even when installing the product.

• To avoid vibration or water leakage.

Use two or more people to lift and transport the product.

• Avoid personal injury.

Do not install the product where it will be exposed to sea wind (salt spray) directly.

• It may cause corrosion on the product. Corrosion, particularly on the condenser and evaporator fins, could cause product malfunction or inefficient operation.

■ Operation

Use a soft cloth to clean. Do not use harsh detergents, wax or thinner, etc.

• Otherwise, color or surface of the oroduct mav deteriorate.

Clean the filter and the heat exchanger regularly and use the gloves for cleaning.

• Adhering to a mass of dust may cause the deterioration of air volume.

Do not use the product for special purposes, such as preserving foods, works of art, etc. It is a consumer ventilator, not a precision refrigeration system.

• There is risk of damage or loss of property.

Do not block the inlet or outlet of air flow.

• It may cause product failure.

Do not step on or put anyting on the product.

• There is risk of personal injury and failure of product.

Introduction

Symbols used in this Manual

This symbol alerts you to the risk of electric shock.

This symbol alerts you to hazards that could cause harm to the product.

NOTICE **This symbol indicates special notes.**

Feature Dimension Diagram

Model : LZ-H015GBA2

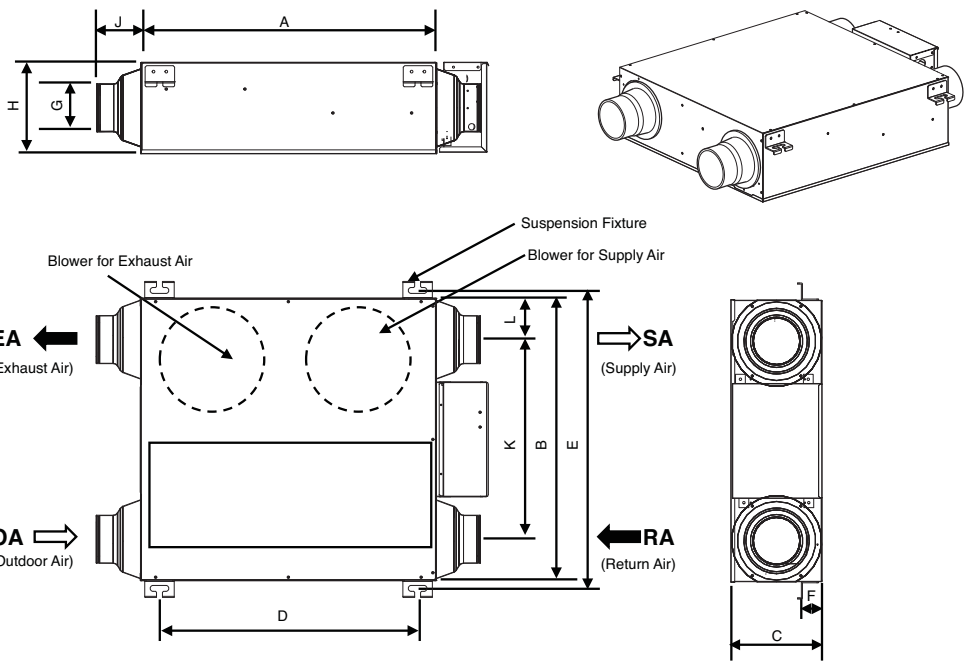

Unit : mm

Model	Figure			Pitch of Suspension Fixture			Nominal Diameter	Duct Connection Flange			Duct Pitch		Weight
	A	B	C	D	E	F		G	H	J	K	L	kg
LZ-H015GBA2	605	570	185	525	603	40	100	97	184	90	394	100	22

❊ It necessary to secure sufficient space for maintenance more than the dimensions described in the product service.

Model : LZ-H025GBA2 / LZ-H035GBA2

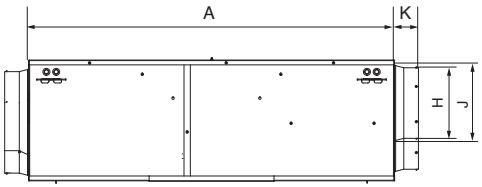

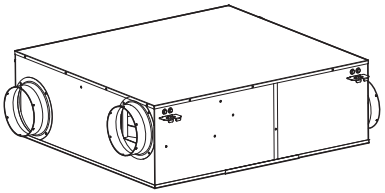

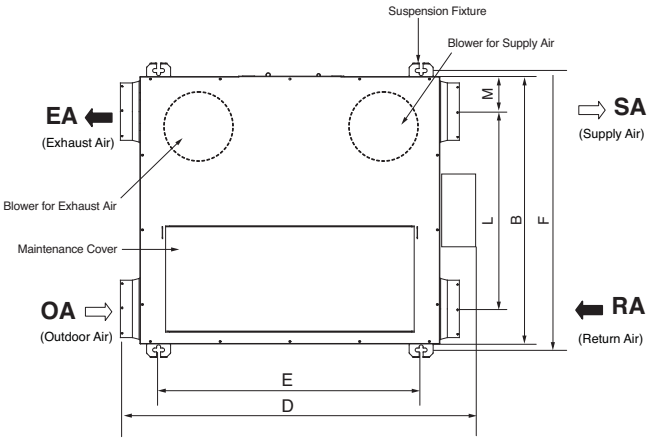

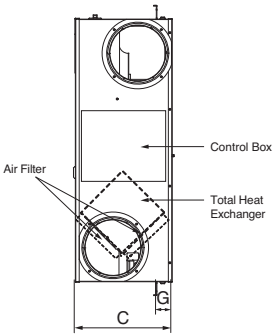

Unit : mm

Model	Figure				Pitch of Suspension Fixture			Nominal Diameter	Duct Connection Flange			Duct Pitch		Weight
	A	B	C	D	E	F	G		H	J	K	L	M	kg
LZ-H025GBA2 LZ-H035GBA2	750	680	250	850	657	711	40	150	146	155	50	502	89.2	32

❊ It necessary to secure sufficient space for maintenance more than the dimensions described in the product service.

Model : LZ-H050GBA2

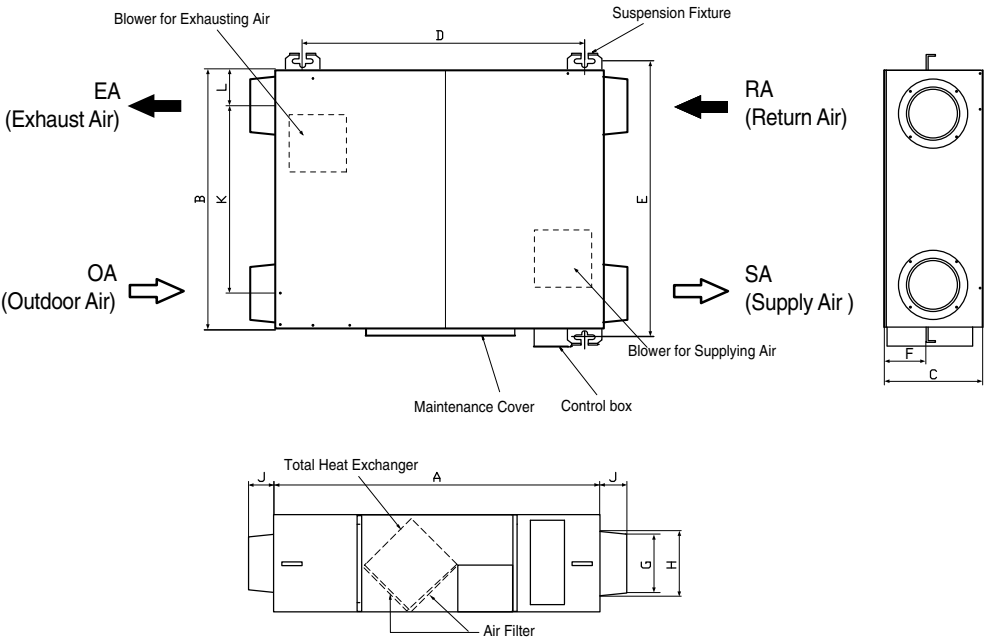

Unit : mm

Model	Figure			Pitch of Suspension Fixture			Nominal Diameter	Duct Connection Flange			Duct Pitch		Weight
	A	B	C	D	E	F		G	H	J	K	L	kg
LZ-H050GBA2	1014	988	273	939	1025	135	200	194	252	96	590	198	44

❊ It necessary to secure sufficient space for maintenance more than the dimensions described in the product service.

Model : LZ-H080GBA2 / LZ-H100GBA2

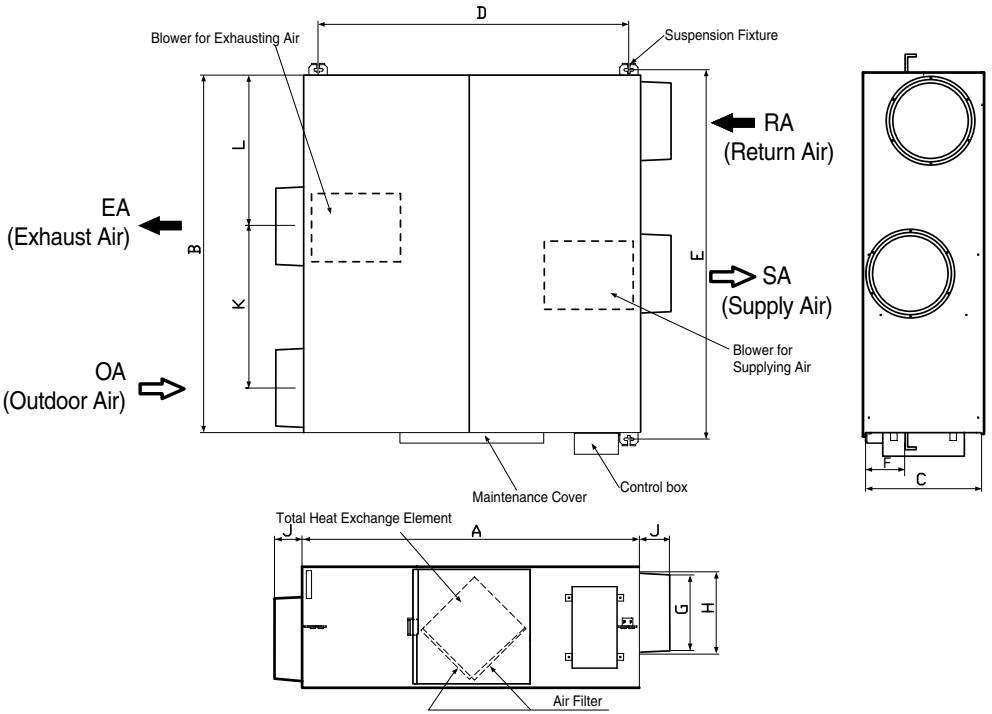

Unit : mm

Model	Figure			Pitch of Suspension Fixture			Nominal Diameter	Duct Connection Flange			Duct Pitch		Weight
	A	B	C	D	E	F		G	H	J	K	L	kg
LZ-H080GBA2 LZ-H100GBA2	1062	1140	365	987	1176	180	250	242	253	98	513	481	60

❊ It necessary to secure sufficient space for maintenance more than the dimensions described in the product service.

Model : LZ-H150GBA2 / LZ-H200GBA2

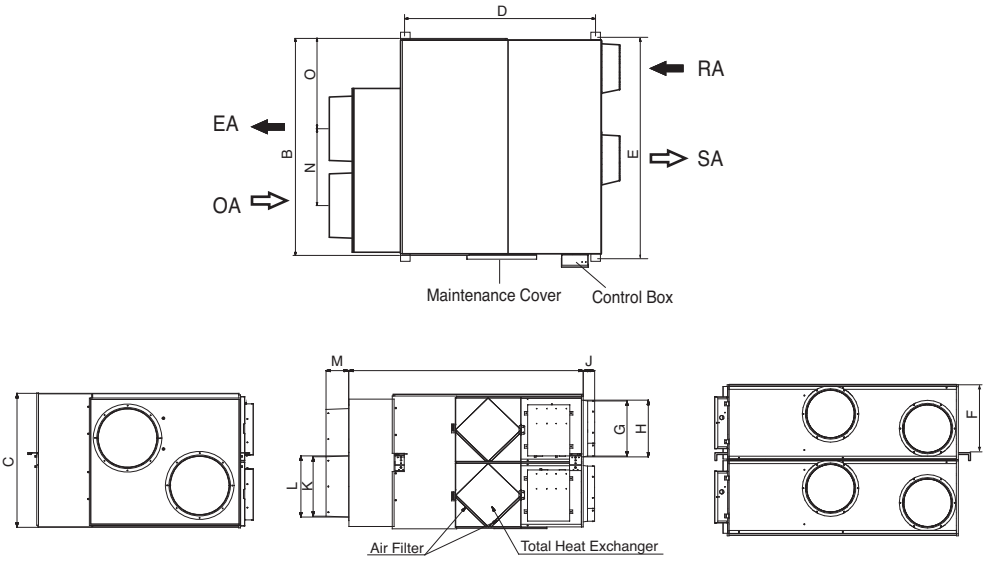

Unit: mm

Model	Figure			Pitch of Suspension Fixture			Duct Connection Flange					Weight
LZ-H150GBA2 LZ-H200GBA2	A	B	C	D	E	F	G	H	J	K	L	(kg)
	1313	1140	738	987	1176	339	242	253	98	340	350	140

✻ It necessary to secure sufficient space for maintenance more than the dimensions described in the product service.

Installation

Installation Map (LZ-H015GBA2/LZ-H025GBA2/LZ-H035GBA2)

■ A PLANE FIGURE

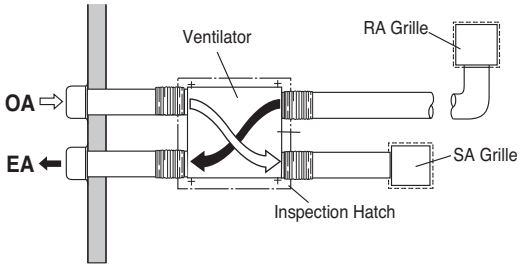

■ A FRONT VIEW

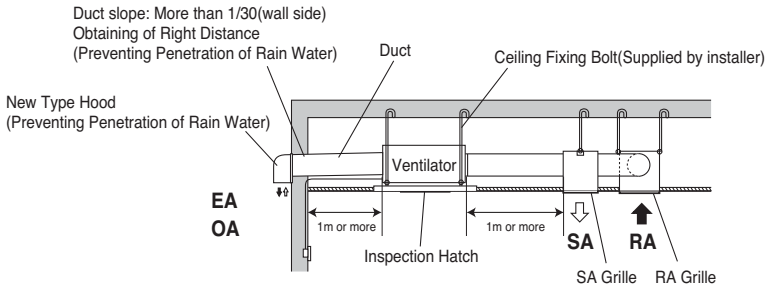

■ THREE DIMENSION VIEW

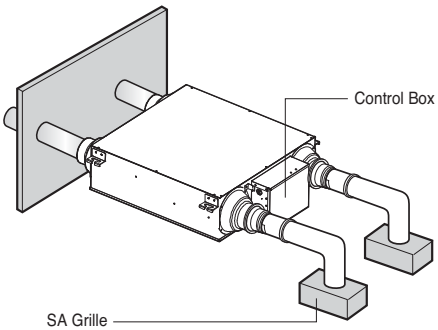

■ INSTALLATION OF MAINTENANCE COVER

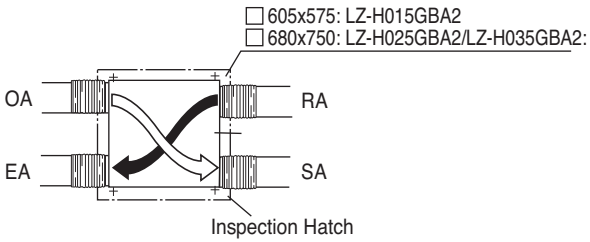

Installation Map (LZ-H050GBA2/LZ-H080GBA2/LZ-H100GBA2)

■ A PLANE FIGURE

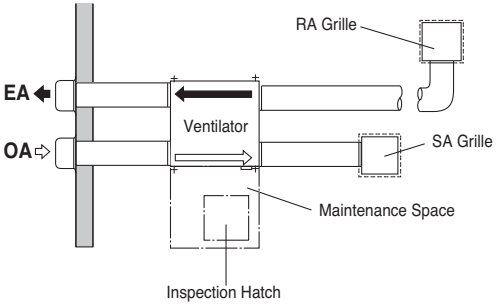

■ A FRONT VIEW

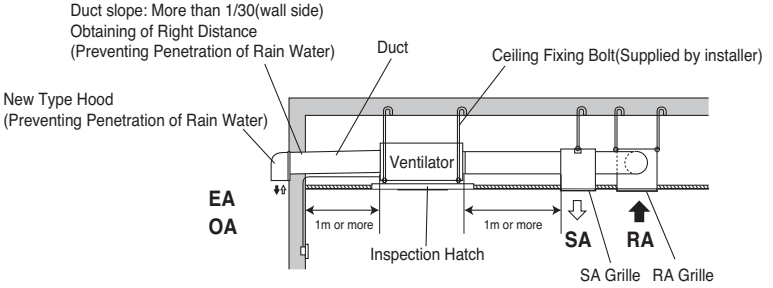

■ THREE DIMENSION VIEW

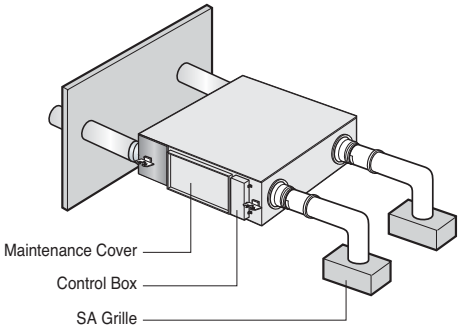

■ INSTALLATION OF MAINTENANCE COVER

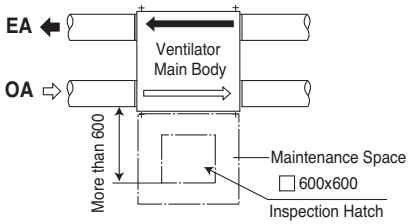

Installation Map (LZ-H150GBA2/LZ-H200GBA2)

■ A PLANE FIGURE

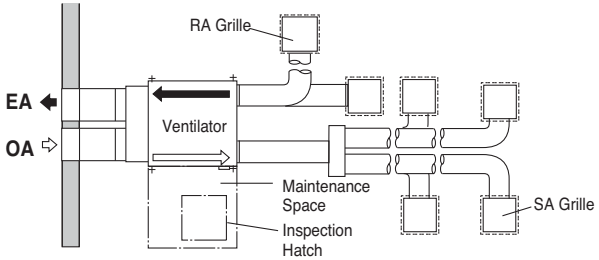

■ A FRONT VIEW

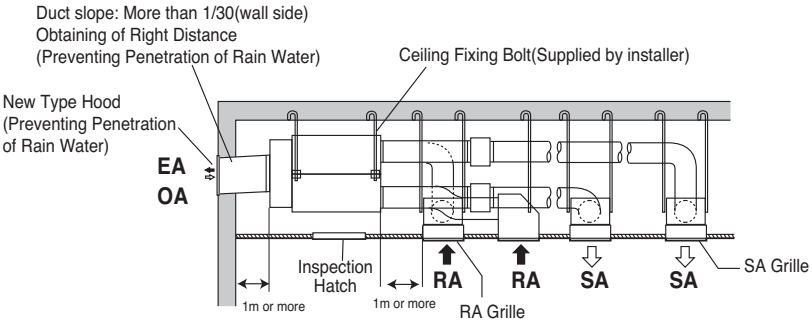

■ THREE DIMENSION VIEW

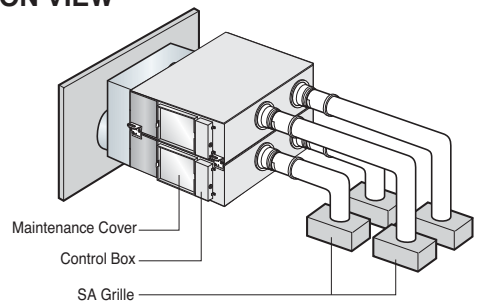

■ INSTALLATION OF MAINTENANCE COVER

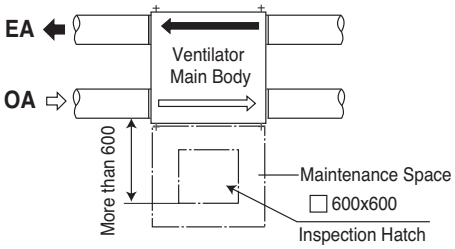

Installation of Main Body

Assembly of Washer, Nut

Tighten the common washer and nut (more than 21mm for the outside diameter of M10, to the commercial ceiling fixing bolt (M10) as shown in the right figure.

- For the ceiling fixing bolt, perform work less than 50mm under the ceiling fixing bracket.

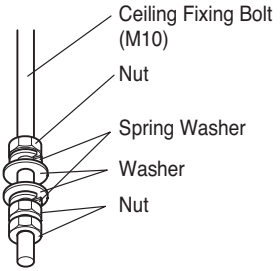

Connection of Duct

1. **After securely connect the duct with the duct connection flange, wrap it with a commercial aluminium tape so that air cannot be leaked.**
2. **Adjust the duct from the ceiling so that no force is applied to the main body of the ventilation system.**
3. **Always use two ducts at the outdoor with the heat insulating material for prevention of dewing.**

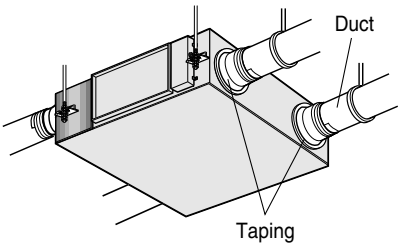

CAUTION:

- **Check that there are no foreign materials (paper, vinyl, etc) or cutoff powders in the duct before connecting the duct.**
- **Take care so that shock may not be applied to the damper plate within the main body when performing the duct connection work.**
- **It is recommended to perform adiabatic treatment even to the duct pipe at the indoor side where ambient temperature is expected higher than room temperature when the main body of the ventilation system for cooling in summer.**
- **Take care so that work may not be performed as in the left figure. Otherwise, it may cause reduction of air volume or abnormal noise.**

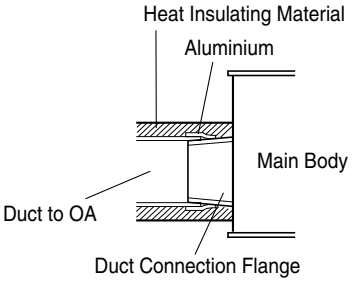



Rapid Bending



Excessive Bending

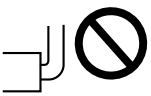

Too Close Bending to Outlet

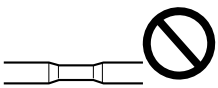

Rapid Reduction of Duct Diameter

CAUTION:

- **In -10°C below ambient temperature, when ventilation is installed the equivalent space in the outdoor and outdoor, It may cause condensation, you must install drainage facilities(Drain Pan) and MD(Moterized Damper) at SA/RA duct.**

Method to Connect Power Cord

1. Release two screws and then open the cover of the control box.

- With reference to the below wiring diagram, accurately connect the main power cords into the terminal block.

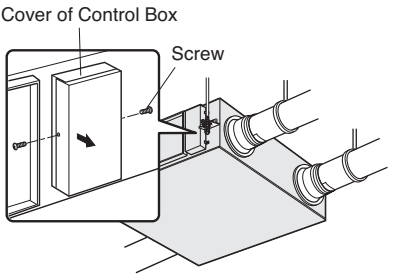

2. After inserting the power cord into the bushing, fully insert it into the terminal block for connection.

- Fix the power cords with the clamp.
- Make sure that the power cords may not be removed by pulling them.

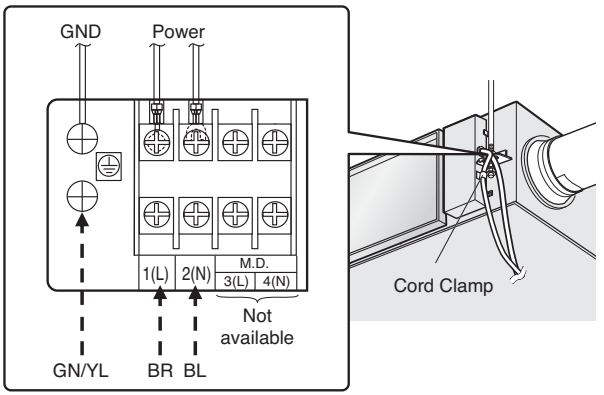

⚠CAUTION

The Power cord connected to the unit should be selected according to the following specifications .

3. Wiring specifications

Wiring specifications	Sheathed wire (should be complied with IEC60245 standard)
Size	0.75 - 1.25mm^2
Length	MAX. 100m
External contact specifications	Normally closed contact (Current tolerance 10mA - 0.5A)

Precautions when laying power wiring

Use round pressure terminals for connections to the power terminal block.

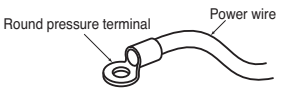

ENGLISH

How to connect Remote Controller(Accessory)

Name and Function of Remote Controller

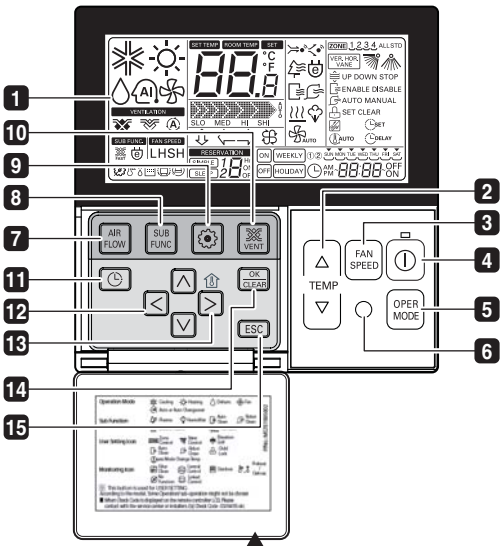

Model : PQRCVSL0
PQRCVSL0QW

Please attach the inform label inside of the door.
Please choose proper language depend on your country.

1. **OPERATION INDICATION SCREEN**
2. **SET TEMPERATURE BUTTON**
3. **FAN SPEED BUTTON**
4. **ON/OFF BUTTON**
5. **OPRATION MODE SELECTION BUTTON**
6. **WIRELESS REMOTE CONTROLLER RECEIVER**
   - Some products don't receive the wireless signals.
7. **AIR FLOW BUTTON**
8. **SUBFUNCTION BUTTON**
9. **FUNCTION SETTING BUTTON**
10. **VENTILATION BUTTON**
11. **RESERVATION**
12. **UP,DOWN,LEFT,RIGHT BUTTON**
    - To check the indoor temperature, press ⇧ > button.
13. **ROOM TEMPERATURE BUTTON**
14. **SETTING/CANCEL BUTTON**
15. **EXIT BUTTON**

※ Some functions may not be operated and displayed depending on the product type.

Accessory

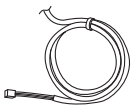

Connection Cable
(1EA, 10m)



Screw
(4 EA)

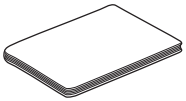

Owner's / Installation manual



Inform label
(8EA-8Languages)

Installation instruction

1. Please fix tightly using provided screw after placing remote controller setup board on the place where you like to setup.

- Please set it up not to bend because poor setup could take place if setup board bends.
  Please set up remote controller board fit to the reclamation box if there is a reclamation box.

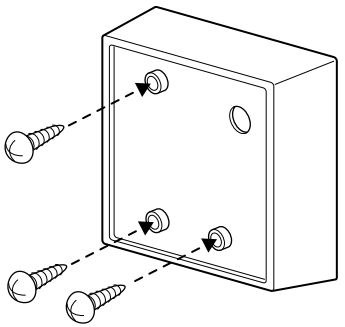

2. Can set up Wired remote controller cable into three directions.

- Setup direction: the surface of wall reclamation, upper, right
- If setting up remote controller cable into upper and right side, please set up after removing remote controller cable guide groove.

❊ Remove guide groove with pliers.

① Reclamation to the surface of the wall
② Upper part guide groove
③ Right part guide groove

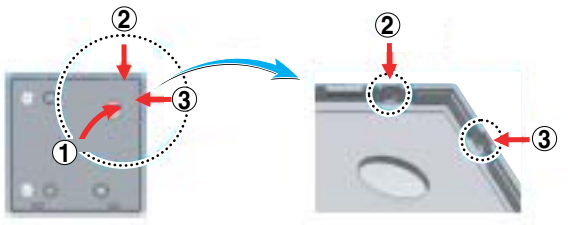

<Wire guide grooves>

3. Please fix remote controller upper part into the setup board attached to the surface of the wall, as the picture below, and then, connect with setup board by pressing lower part.

- Please connect not to make a gap at the remote controller and setup board's upper and lower, right and left part.

<Connecting order>

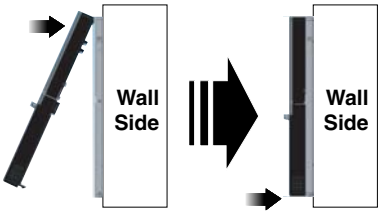

When separating remote controller from setup board, as the picture below, after inserting into the lower separating hole using screw driver and then, spinning clockwise, remote controller is separated.

- There are two separating holes. Please individually separate one at a time.
- Please be careful not to damage the inside components when separating.

<Separating order>

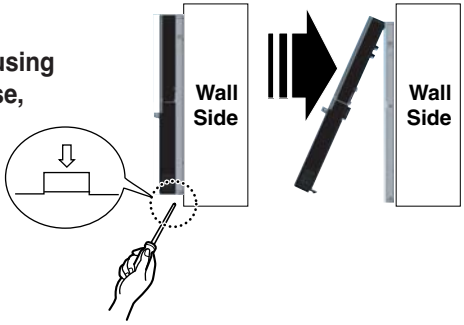

4. Please connect indoor unit and remote controller using connection cable.

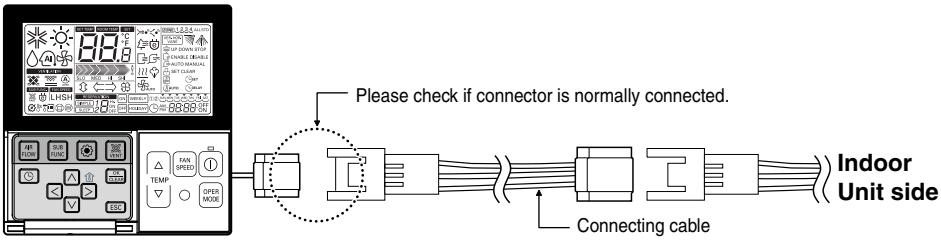

5. Please use extension cable if the distance between wired remote controller and indoor unit is more than 10m.

⚠CAUTION

When installing the wired remote controller, do not bury it in the wall.
(It can cause damage in the temperature sensor.)
Do not install the cable to be 50m or above.
(It can cause communication error.)

- When installing the extension cable, check the connecting direction of the connector of the remote controller side and the product side for correct installation.
- If you install the extension cable in the opposite direction, the connector will not be connected.
- Specification of extension cable: 2547 1007 22# 2 core 3 shield 5 or above.

Group control

1. When installing more than 2 units of air conditioner to one wired remote controller, please connect as the right figure.

- If it is not event communication indoor unit, set the unit as slave.
- Check for event communication through the product manual.

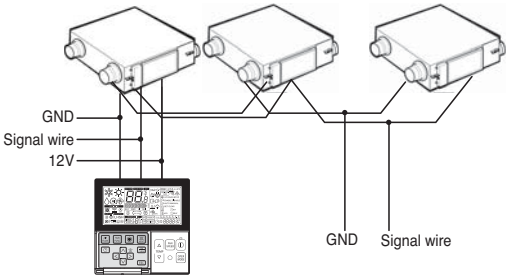

When controlling multiple indoor units with event communication function with one remote controller, you must change the master/slave setting from the indoor unit.

- Indoor units, the master/slave configuration of the product after completion of indoor unit power 'OFF' and then 'ON' the power after 1 minutes elapsed sign up.
- For ceiling type cassette and duct product group, change the switch setting of the indoor PCB.



#1 switch OFF: Master
(Factory default setting)



#1 switch ON: Slave

- For wall-mount type and stand type product, change the master/slave setting with the wireless remote controller. (Refer to wireless remote controller manual for detail)

❊ When installing 2 remote controllers to one indoor unit with event communication function, set the master/slave of the remote controller. (Refer to remote controller master/slave selection)

When controlling the group, some functions excluding basic operation setting, fan level Min/Mid/Max, remote controller lock setting and time setting may be limited.

2. When installing more than 2 wired remote controllers to one air conditioner, please connect as the right picture.

- When installing more than 2 units of wired remote controller to one air conditioner, set one wired remote controller as master and the others all as slaves, as shown in the right picture.
- You cannot control the group as shown in the right for some products.
- Refer to the product manual for more detail.

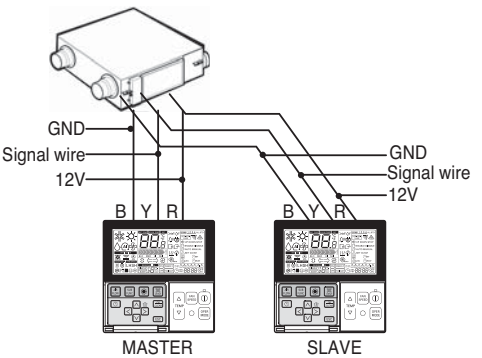

<When simultaneously connecting 2 sets of wired remote controller>

- When controlling in groups, set the master/slaver of the remote controller. Refer to Installer setting section on how to set master/slave for more detail.

• This unit can be used as part of the combined operation system used together with indoor units(Multi-V system air conditioners), or as an independent system for processing outside air.

<Combined operation system with Multi-V system(connected with ventilation units and standard indoor units in a single refrigerant circuit)>

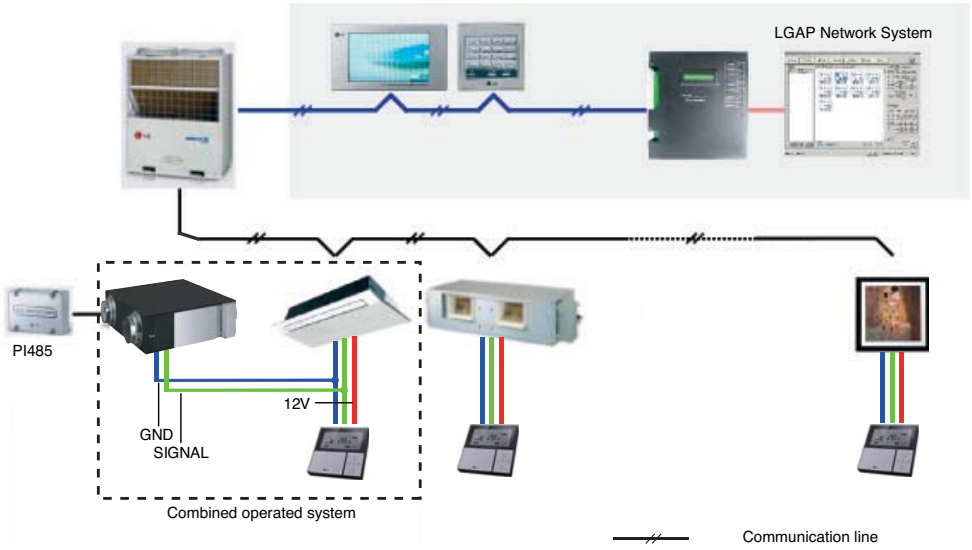

<Independent system (connected only with a ventilation unit in a single refrigerant circuit)>

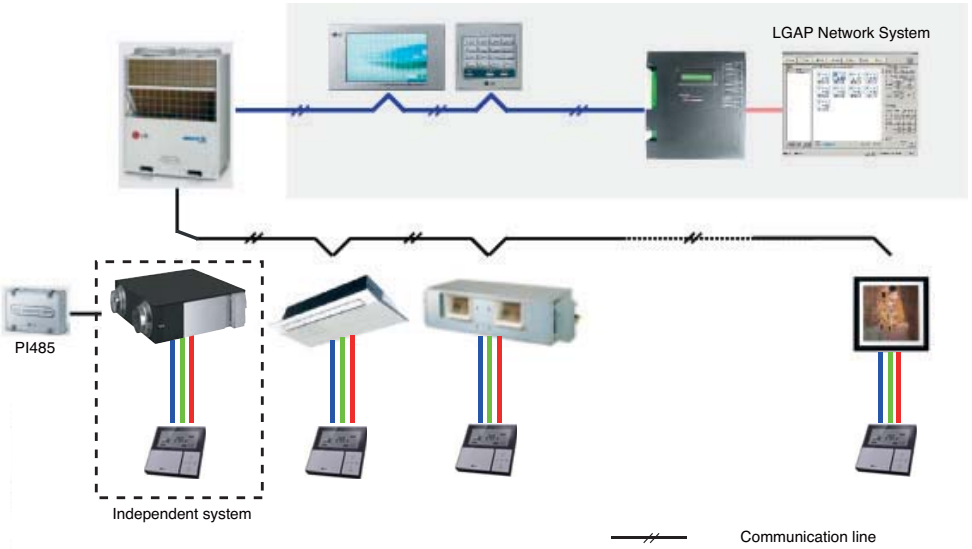

Installer Setting -How to enter installer setting mode

⚠CAUTION

Installer setting mode is to set the detail function of the remote controller.
If the installer setting mode is not set correctly, it can cause problems to the product, user injury or property damage. This must be set by an certificated installer, and any installation or change that is carried out by a non-certificated person should be responsible for the results. In this case, free service cannot be provided.

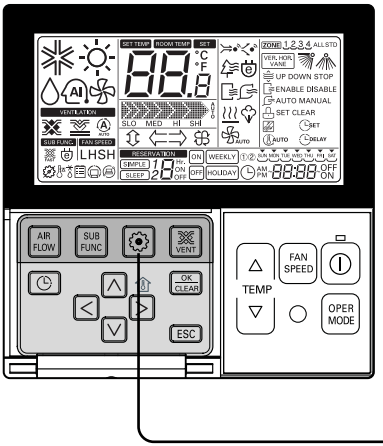

1 If pressing ⚙ button long for 3 seconds, it enters into remote controller setter setup mode.
- If pressing once shortly, it enters into user setup mode. Please press more than 3 seconds for sure.

2 When you enter the setting mode initially, Function code is displayed on the bottom of the LCD screen.

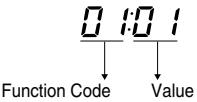

• Some categories of the menu may not be displayed according to the function of the product, or the menu name may be different.

<Installer Setting Code Table>

1) General Ventilation product

No.	Function	Code	Value
1	Test Run	01	01 : Test Run Setup
2	Address Setting	02	00~FF : Address of Central Control
3	SA(Supply Air) ESP	03	<ESP level> <ESP value> <Example>
4	EA(Exhaust Air) ESP	04	01 : Low 0~255 02 : High 03 : Super High 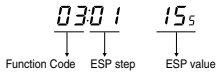
5	Product Direction	05	01 : Normal 02 : Opposite
6	Quick Refresh Priority	06	01 : Supply Air First 02 : Exhaust Air First
7	Master Setting	07	00 : Slave 01 : Master
8	Dry Contact	09	00 : Auto-Off 01 : Auto-On
9	Release Of 3 Minute Delay	10	01 : Set
10	Zone State	11	01 : Variable 02 : Fixed

※ Some contents may not be displayed depending on the product function

How to connect Central Controller(Accessory)

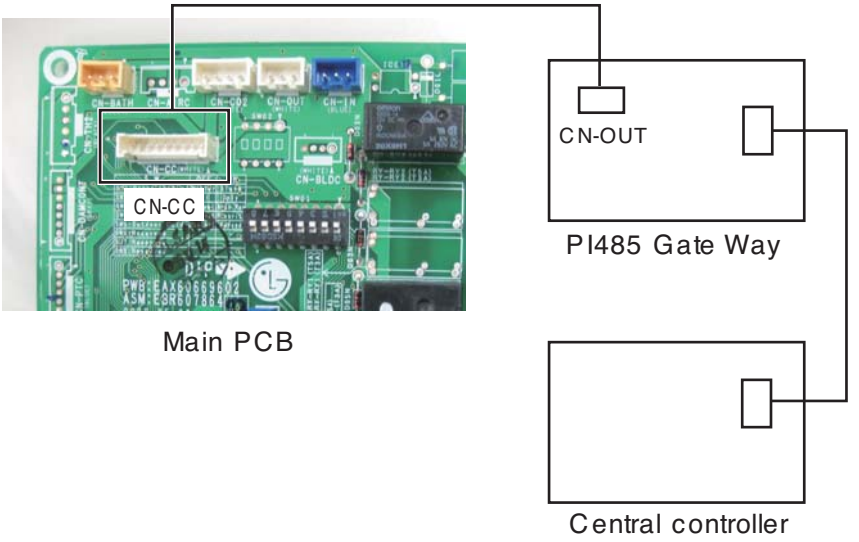

1. Connect between PI485 Gate Way(CN-OUT) and Main PCB(CN-CC).
2. You do not need to set the Option Switch of Main PCB.
3. Please refer to the manual of Accessory for the detail installation method.

Trial Operation

Method to Operate and Select Air Volume –Ventilation Single Operation

It is a function to cool and refresh the indoor air using general ventilation product..

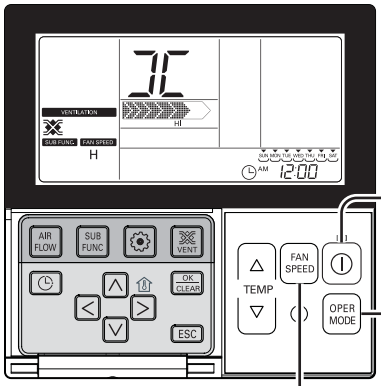

Ventilation single operation

1 Press ⏻ button on the remote controller.



2 Pressing OPER MODE button will change the ventilation mode.



Ventilation mode	Remote Controller Display	Contents
Heat exchange	HE	Circulate indoor air without loss of heat
Normal	CI	Directly circulate indoor air without going through heat exchanger
Automatic	AU	Circulate indoor air with automatically comparing indoor and outdoor air

3 Pressing FAN SPEED button will change the strength of the wind
- Pressing the button can select from 'weak ' strong ' very strong'.
- If CO_2 sensor is installed, it can select from 'weak ' strong ' very strong ' automatic'.



Method to Operate and Select Air Volume – Interlinked Operation with Ventilation.

It is used when air conditioner is interlinked with ventilation product.
It is a function that cools and refreshes indoor air using the ventilation product at the same time operating the air conditioning function.

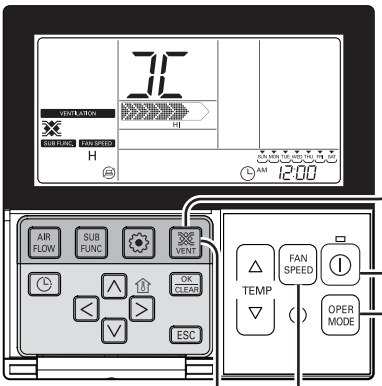

Ventilation interlinked operation

1 Press VENT button on the remote controller control panel.
- It is only used when air conditioner and general ventilation is interlinked.('Interlinked operation' displayed on the remote controller display)



2 Pressing 'Start/Stop' button at ventilation mode will start ventilation.

3 Pressing OPER MODE button will change the ventilation operation mode.
Pressing operation selection button will change the mode in the order of 'Heat exchange ' normal ' automatic'
❊ It only displays on the remote controller display when it is in ventilation mode, and it displays the desired temperature when it returns to air condition mode.



4 Pressing FAN SPEED button in general ventilation mode will change airflow speed.
Pressing airflow speed button will change the mode in the order of 'weak ' strong ' extra strong'.
If CO_2 sensor is installed, it can select from 'weak ' strong ' very strong ' automatic'.



5 Changing back to air conditioner mode
1)Automatic Conversion : when no button is pressed for 15 seconds or longer, it automatically converts back to air conditioner mode.
2) Manual Conversion : Pressing VENT button in ventilation mode will manually convert.

In case of finding a problem at a trial operation

Symptom	Counter-measures
The product doesn't work though you press the 'ON' switch.	• Checking the power(rated power 1 phase, 220-240V, the diameter ø0.6~ø2.0, capacity of breaker)
	• Isn't the fuse connected?
	• Are the PCB and Remote Controller rightly connected?
The fan doesn't run	• Is the outdoor temperature the limit temperature? (Less than -10°C, more than 45°C)
	• In case of the limit temperature - Switch on Option No. 5. - Repower the product and check whether it works or not. - Switch off Option No. 5. and repower the product once again.


LG
Life's Good