LG
Life's Good

ENGLISH
ESPAÑOL
PORTUGUESE

INSTALLATION MANUAL

AIR CONDITIONER

- Please read this installation manual completely before installing the product.
- Installation work must be performed in accordance with the national wiring standards by authorized personnel only.
- Please retain this installation manual for future reference after reading it thoroughly.

TYPE : MULTI TYPE CEILING CASSETTE

P/NO : MFL67793801

www.lg.com

TIPS FOR SAVING ENERGY

Here are some tips that will help you minimize the power consumption when you use the air conditioner. You can use your air conditioner more efficiently by referring to the instructions below:

- Do not cool excessively indoors. This may be harmful for your health and may consume more electricity.
- Block sunlight with blinds or curtains while you are operating the air conditioner.
- Keep doors or windows closed tightly while you are operating the air conditioner.
- Adjust the direction of the air flow vertically or horizontally to circulate indoor air.
- Speed up the fan to cool or warm indoor air quickly, in a short period of time.
- Open windows regularly for ventilation as the indoor air quality may deteriorate if the air conditioner is used for many hours.
- Clean the air filter once every 2 weeks. Dust and impurities collected in the air filter may block the air flow or weaken the cooling / dehumidifying functions.

For your records

Staple your receipt to this page in case you need it to prove the date of purchase or for warranty purposes. Write the model number and the serial number here:

Model number : _____

Serial number : _____

You can find them on a label on the side of each unit.

Dealer's name : _____

Date of purchase : _____

IMPORTANT SAFETY INSTRUCTIONS

READ ALL INSTRUCTIONS BEFORE USING THE APPLIANCE.

Always comply with the following precautions to avoid dangerous situations and ensure peak performance of your product

WARNING

It can result in serious injury or death when the directions are ignored

CAUTION

It can result in minor injury or product damage when the directions are ignored

WARNING

- Installation or repairs made by unqualified persons can result in hazards to you and others.
- Installation MUST conform with local building codes or, in the absence of local codes, with the Nation Electrical Code NFPA 70/ANSI C1-1003 or current edition and Canadian Electrical Code Part1 CSA C.22.1.
- The information contained in the manual is intended for use by a qualified service technician familiar with safety procedures and equipped with the proper tools and test instruments.
- Failure to carefully read and follow all instructions in this manual can result in equipment malfunction, property damage, personal injury and/or death.

Installation

- Do not use a defective or underrated circuit breaker. Use this appliance on a dedicated circuit.
  - There is risk of fire or electric shock.
- For electrical work, contact the dealer, seller, a qualified electrician, or an Authorized Service Center.
  - Do not disassemble or repair the product. There is risk of fire or electric shock.
- Always ground the product.
  - There is risk of fire or electric shock.
- Install the panel and the cover of control box securely.
  - There is risk of fire or electric shock.
- Always install a dedicated circuit and breaker.
  - Improper wiring or installation may cause fire or electric shock.
- Use the correctly rated breaker or fuse.
  - There is risk of fire or electric shock.
- Do not modify or extend the power cable.
  - There is risk of fire or electric shock.
- Do not let the air conditioner run for a long time when the humidity is very high and a door or a window is left open.
  - Moisture may condense and wet or damage furniture.
- Be cautious when unpacking and installing the product.
  - Sharp edges could cause injury. Be especially careful of the case edges and the fins on the condenser and evaporator.
- For installation, always contact the dealer or an Authorized Service Center.
  - There is risk of fire, electric shock, explosion, or injury.

- Do not install the product on a defective installation stand.
  - It may cause injury, accident, or damage to the product.
- Be sure the installation area does not deteriorate with age.
  - If the base collapses, the air conditioner could fall with it, causing property damage, product failure, and personal injury.
- Do not use the aluminum pipe.
  - It will cause gas leakage.
- Use a vacuum pump or Inert (nitrogen) gas when doing leakage test or air purge. Do not compress air or Oxygen and Do not use Flammable gases. Otherwise, it may cause fire or explosion.
  - There is the risk of death, injury, fire or explosion.

Operation

- Do not store or use flammable gas or combustibles near the product.
  - There is risk of fire or failure of product.

⚠ CAUTION

Installation

- Always check for gas (refrigerant) leakage after installation or repair of product.
  - Low refrigerant levels may cause failure of product.
- Install the drain hose to ensure that water is drained away properly.
  - A bad connection may cause water leakage.
- Keep level even when installing the product.
  - To avoid vibration or water leakage.
- Do not install the product where the noise or hot air from the outdoor unit could damage the neighborhoods.
  - It may cause a problem for your neighbors.
- Use two or more people to lift and transport the product.
  - Avoid personal injury.
- Do not install the product where it will be exposed to sea wind (salt spray) directly.
  - It may cause corrosion on the product. Corrosion, particularly on the condenser and evaporator fins, could cause product malfunction or inefficient operation.

TABLE OF CONTENTS

2 TIPS FOR SAVING ENERGY

3 IMPORTANT SAFETY INSTRUCTIONS

6 INTRODUCTION

6 Features

7 INSTALLATION

7 Selection of the best location

8 Ceiling dimension and hanging bolt location

11 Installation of Decoration Panel

12 Drain Piping

14 Wiring Connection

15 Remote Control Preparation

16 Test Running

17 INSTALLATION INSTRUCTIONS

17 Installer Setting -How to enter installer setting mode

17 Installer Setting - Installer Setting Code Table

18 Installer Setting - Setting Address of Central Control

18 Installer Setting - Checking Address of Central Control

18 Dip Switch Setting of Indoor unit PCB

INTRODUCTION

Features

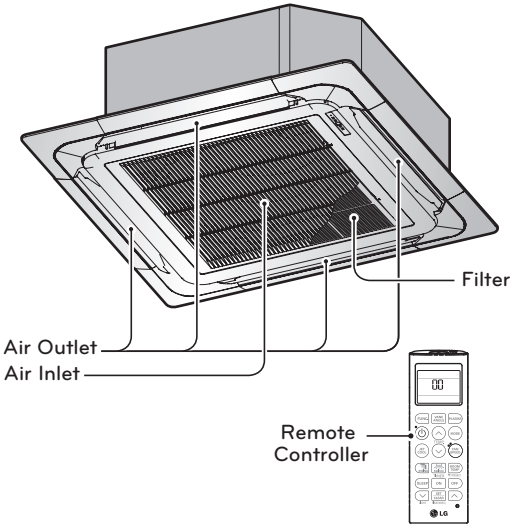

Name	Quantity	Shape	Other
Clamp metal	2 EA		• Paper pattern for installation • Owner's manual • Installation manual
Drain hose	1 EA		
Insulation for fitting	1 set	for gas pipe for liquid pipe	
Washer for hanging bracket	8 EA		
Clamp (Tie Wrap)	4 EA		
Bolt	4 EA		

Screws for fixing panels are attached to decoration panel.

INSTALLATION

Read completely, then follow step by step.

Selection of the best location

There should not be any heat source or steam near the unit.
There should not be any obstacles to the air circulation.
A place where air circulation in the room will be good.
A place where drainage can be easily obtained.
A place where noise prevention is taken into consideration.
Do not install the unit near the door way.
Ensure the spaces indicated by arrows from the wall, ceiling, or other obstacles.
The indoor unit must have the maintenance space.

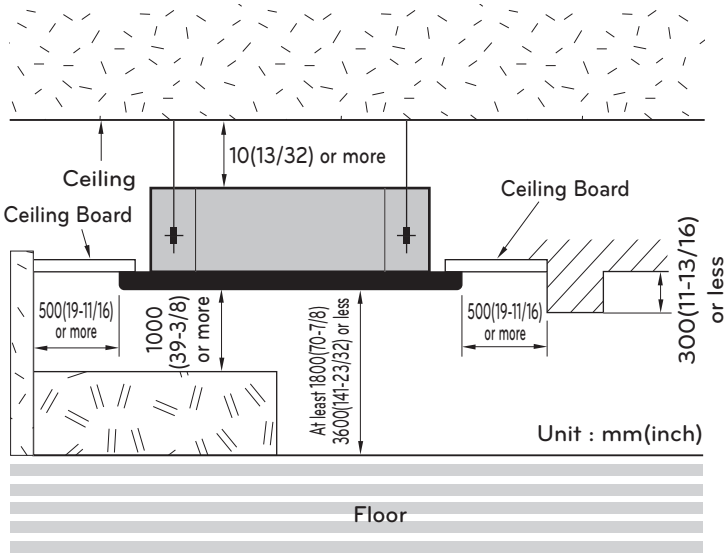

* Please use an annexed sheet or the corrugated cardboard on the bottom of packing as installation sheet.

Annexed sheet

Or

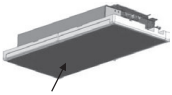

Packing corrugated cardboard on the bottom

* When using the bottom sheet, please use it after separating the installation sheet from packing of the product floor by using a knife etc as a picture below.

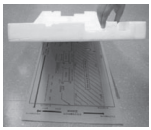

Ceiling dimension and hanging bolt location

The dimensions of the paper model for installation are the same as those of the ceiling opening dimensions.

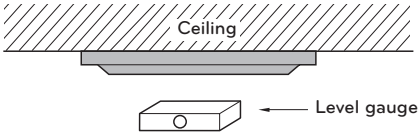

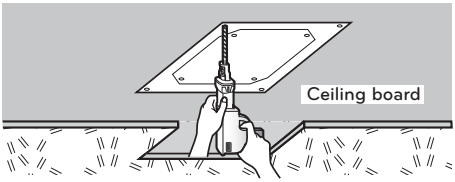

TQ/TR Chassis

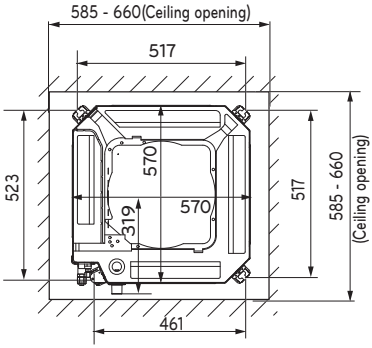

Unit:mm

TM/TN/TP Chassis

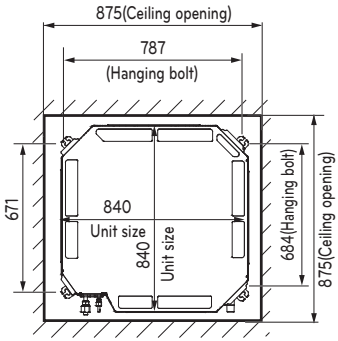

Unit:mm

CAUTION

- This air-conditioner uses a drain pump.
- Install the unit horizontally using a level gauge.
- During the installation, care should be taken not to damage electric wires.

Select and mark the position for fixing bolts and piping hole.

Decide the position for fixing bolts slightly tilted to the drain direction after considering the direction of drain hose.

Drill the hole for anchor bolt on the wall.

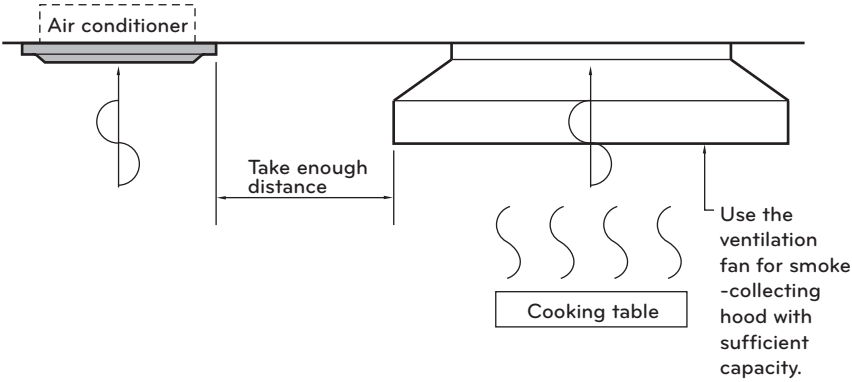

NOTE

• Avoid the following installation location.

1 Such places as restaurants and kitchen where considerable amount of oil steam and flour is generated. These may cause heat exchange efficiency reduction, or water drops, drain pump mal-function. In these cases, take the following actions;
   • Make sure that ventilation fan is enough to cover all noxious gases from this place.
   • Ensure enough distance from the cooking room to install the air conditioner in such a place where it may not suck oily steam.

2 Avoid installng air conditioner in such places where cooking oil or iron powder is generated.

3 Avoid places where inflammable gas is generated.

4 Avoid place where noxious gas is generated.

5 Avoid places near high frequency generators.

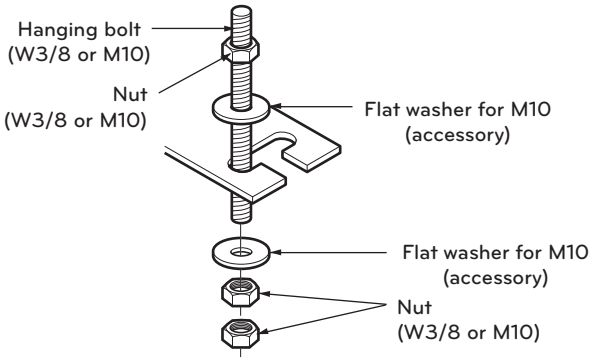

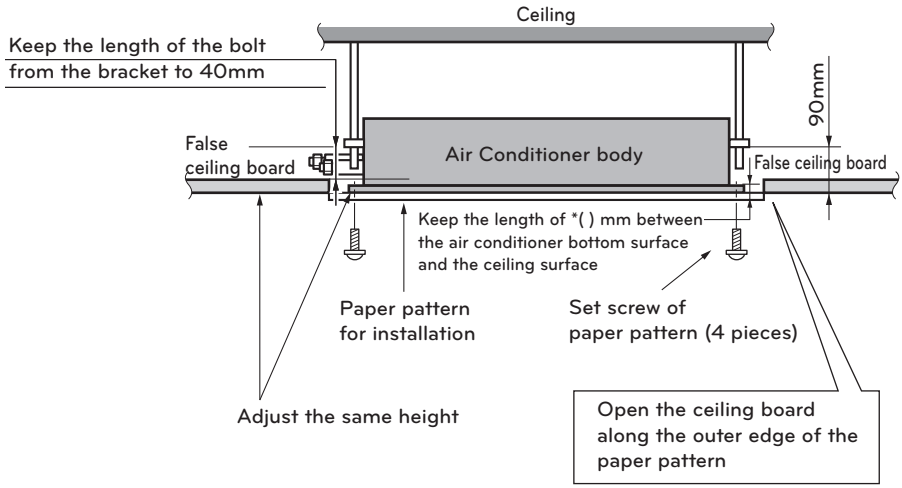

* The following parts are local purchasing.
  ① Hanging Bolt - W 3/8 or M10
  ② Nut - W 3/8 or M10
  ③ Spring Washer - M10
  ④ Plate Washer - M10

⚠ CAUTION

Tighten the nut and bolt to prevent the unit from falling.

*( ) → TQ/TR : 31 - 34mm
TP : 15mm

Installation of Decoration Panel

The decoration panel has its installation direction.

Before installing the decoration panel, always remove the paper template.

1 Temporarily fix two decoration panel fixing screws (hexagon M5 screw) on the unit body. (Tighten by amount 10mm in length.)
The fixing screws (hexagon M5 screw) are included the indoor unit box.

2 Remove the air inlet grille from the decoration panel. (Remove the hook for the air inlet grille cord.)

3 Hook the decoration panel key hole ( ) on the screws fixed in step above, and slide the panel so that the screws reach the key hole edge.

4 Retighten completely two temporarily fixed screws and other two screws. (Total 4 screws)

5 Connect the louver motor connector and display connector.

6 After tightening these screws, install the air inlet grille (including the air filter).

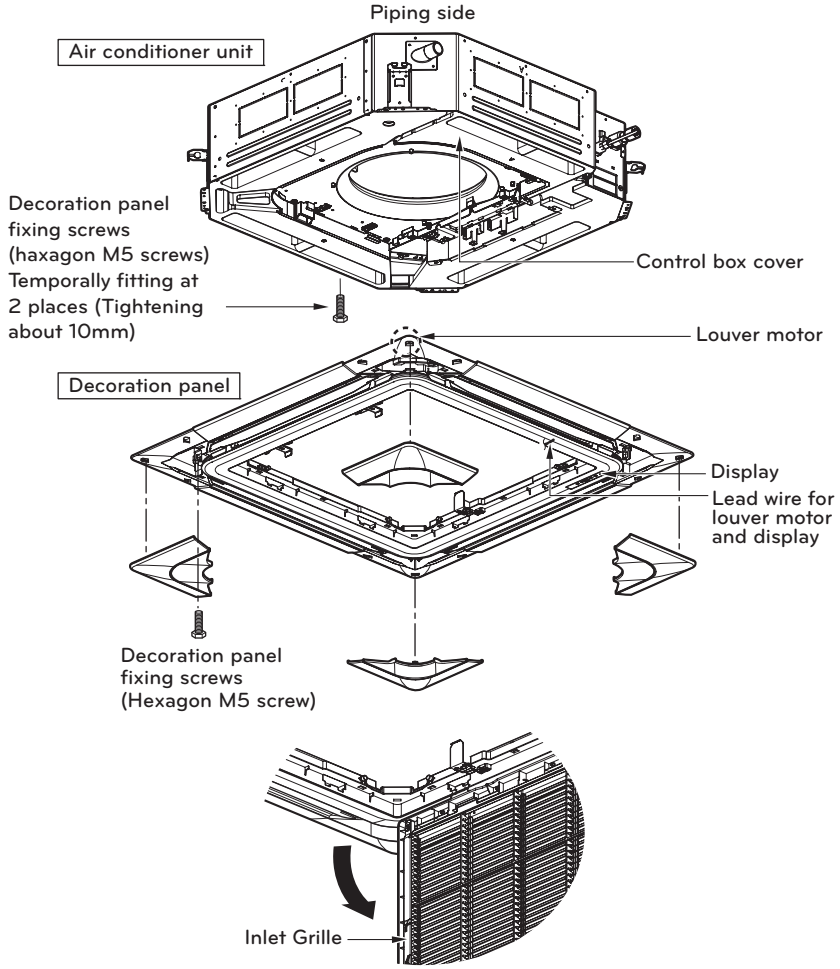

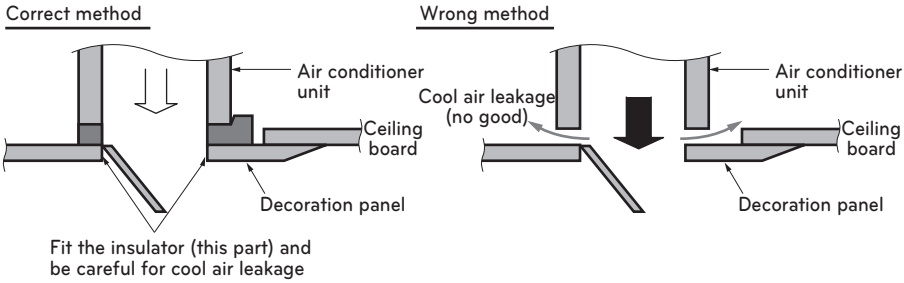

CAUTION

Install certainly the decoration panel.
Cool air leakage causes sweating. ➔ Water drops fall.

Drain Piping

- Drain piping must have down-slope (1/50 to 1/100): be sure not to provide up-and-down slope to prevent reversal flow.
- During drain piping connection, be careful not to exert extra force on the drain port on the indoor unit.
- The outside diameter of the drain connection on the indoor unit is 32mm.
  - Piping material: Polyvinyl chloride pipe VP-25 and pipe fittings
- Be sure to install heat insulation on the drain piping.
  - Heat insulation material: Polyethylene foam with thickness more than 8 mm.

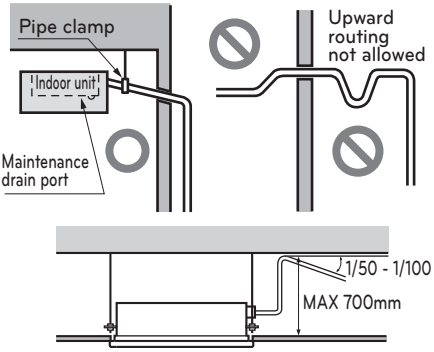

Drain test

The air conditioner uses a drain pump to drain water.

Use the following procedure to test the drain pump operation:

- Connect the main drain pipe to the exterior and leave it provisionally until the test comes to an end.
- Feed water to the flexible drain hose and check the piping for leakage.
- Be sure to check the drain pump for normal operating and noise when electrical wiring is complete.
- When the test is complete, connect the flexible drain hose to the drain port on the indoor unit.

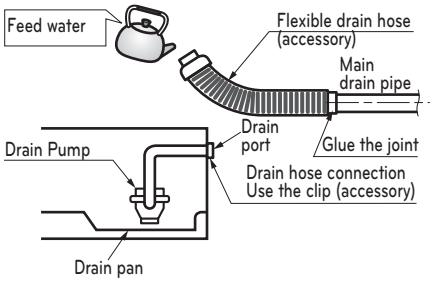

CAUTION

The supplied flexible drain hose should not be curved, neither screwed.
The curved or screwed hose may cause a leakage of water.

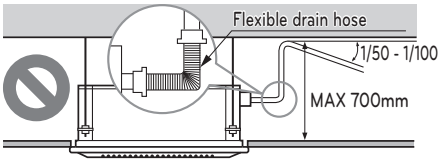

CAUTION

After the confirmation of the above conditions, prepare the wiring as follows:

1 Never fail to have an individual power specialized for the air conditioner. As for the method of wiring, be guided by the circuit diagram posted on the inside of control box cover.
2 Provide a circuit breaker switch between power source and the unit.
3 The screws which fasten the wiring in the casing of electrical fittings are liable to come loose from vibrations to which the unit is subjected during the course of transportation. Check them and make sure that they are all tightly fastened. (If they are loose, it could give rise to burn-out of the wires.)
4 Specification of power source
5 Confirm that electrical capacity is sufficient.
6 Be sure that the starting voltage is maintained at more than 90 percent of the rated voltage marked on the name plate.
7 Confirm that the cable thickness is as specified in the power sources specification. (Particularly note the relation between cable length and thickness.)
8 Never fail to equip a leakage breaker where it is wet or moist.
9 The following troubles would be caused by voltage drop-down.
   - Vibration of a magnetic switch, damage on the contact point, fuse breaking, disturbance by the normal function of an overload protection device.
   - Proper starting power is not given to the compressor.

Wiring Connection

Connect the wires to the terminals on the control board individually according to the outdoor unit connection.

Ensure that the color of the wires of outdoor unit and the terminal No. are the same as those of indoor unit respectively.

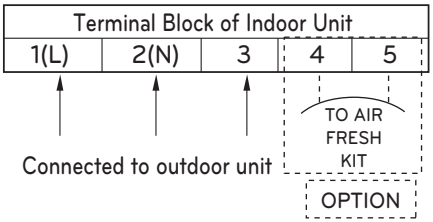

Precautions when laying power wiring

Use round pressure terminals for connections to the power terminal block.

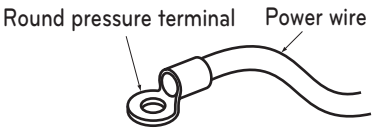

When none are available, follow the instructions below.

- Do not connect wiring of different thicknesses to the power terminal block. (Slack in the power wiring may cause abnormal heat.)
- When connecting wiring which is the same thickness, do as shown in the figure below.

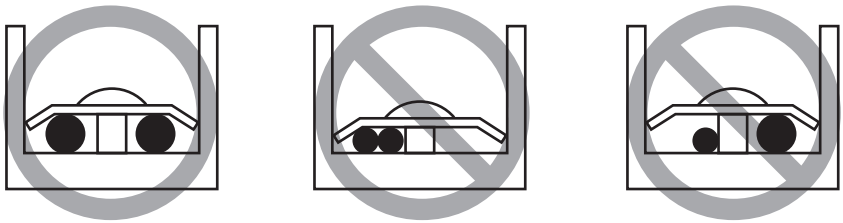

WARNING

Make sure that the screws of the terminal are free from looseness.

Remote Control Preparation

HOW TO MOUNT ONTO A WALL

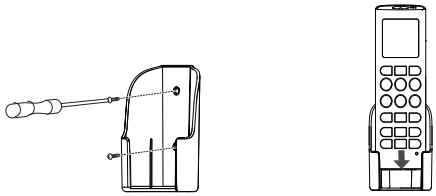

1 Remove the battery cover from the remote controller.
- Slide the cover according to the arrow direction.

2 Insert the two batteries.
- Be sure that the (+) and (-) directions are correct.
- Be sure that both batteries are new.

3 Re-attach the cover.
- Slide it back into position.

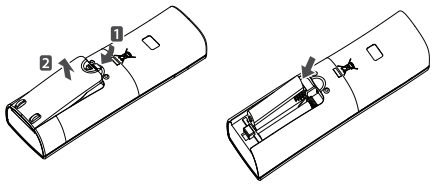

- Do not use rechargeable batteries, such batteries differ from standard dry cells in shape, dimensions, and performance.
- Romove the batteries from the remote controller if the air conditioner is not going to be used for some long time.

Test running

PRECAUTIONS IN TEST RUN

The initial power supply must provide at least 90% of the rated voltage.
Otherwise, the air conditioner should not be operated.

CAUTION

- For test run, carry out the cooling operation firstly even during heating season. If heating operation is carried out firstly, it leads to the trouble of compressor. Then attention must be paid.

Test operation

- During the TEST OPERATION, the unit operates in cooling mode at high speed fan, regardless of room temperature and resets in 18 minutes. During test operation, if remote controller signal is received, the unit operates as remote controller sets. If you want to use this operation, Press and hold the ON/OFF button for 3 - 5 seconds, then the buzzer sound 1 'beep'. If you want to stop the operation, re-press the button.

[Ceiling Cassette Type]

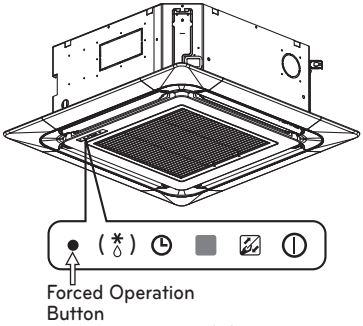

( ) : Heat pump only

Connection of power supply

- Connect the power supply cord to the independent power supply.
  Circuit breaker is required.

Evaluation of the performance

- Measure the pressure of the gas side service valve.
- Measure the air temperature from inlet and outlet of air conditiioner.
- Ensure the difference between the inlet and outlet temperature is more than 8°C.
- For reference; the gas side pressure at optimum condition is shown on table (cooling).

Refrigerant	Outside ambient TEMP.	The pressure of the gas side service valve
R22	35°C(95°F)	4 - 5 kg/cm^{2}G (56,8 - 71,0 P.S.I.G.)
R410A	35°C(95°F)	8.5-9.5 kg/cm^{2}G (120 - 135 P.S.I.G.)

NOTE

- If the actual pressure is higher than shown, the system is most likely overcharged, and charge should be removed. If the actual pressure are lower than shown, the system is most likely undercharged, and charge should be added.

INSTALLATION INSTRUCTIONS

Installer Setting -How to enter installer setting mode

⚠ CAUTION

Installer setting mode is to set the detail function of the remote controller.
If the installer setting mode is not set correctly, it can cause problems to the product, user injury or property damage. This must be set by an certificated installer, and any installation or change that is carried out by a non-certificated person should be responsible for the results. In this case, free service cannot be provided.

1. With the JET COOL button pressed, press the RESET button.
2. By using the TEMPERATURE SETTING button, set function code and setting value. (Please refer the Installer Setting Code Table.)
3. Press the ON/OFF button toward the indoor unit 1 time.
4. Reset the remote controller to use the general operation mode.

Installer Setting - Installer Setting Code Table

Installer Setting Code Table

No.	Function	Function Code	Setting Value	Remote Controller LCD
1	Ceiling Height Selection	1	1 : Standard	1.1
			2 : Low	1.2
			3 : High	1.3
			4 : Super High	1.4
2	Group Control	2	0 : Set to Master	2.0
			1 : Set to Slave	2.1
			2 : Check Master/Slave	2.2

Ceiling Height Selection & Group Control
Indoor unit connected to wired remote controller operate as wired remote controller setting. Please refer to the wired remote controller accessory manual for more details.

Installer Setting - Setting Address of Central Control

1. With the MODE button pressed, press the RESET button.
2. By using the temperature setting button, set the indoor unit address.
   - Setting range : 00 - FF
3. After setting the address, press the ON/OFF button toward the indoor unit 1 time.
4. The indoor unit will display the set address to complete the address setting.
   - The address display time and method can differ by the indoor uint type.
5. Reset the remote controller to use the general operation mode.

Installer Setting - Checking Address of Central Control

1. With the PLASMA button pressed, press the RESET button.
2. Press the ON/OFF button toward the indoor unit 1 time, and the indoor unit will display the set address in the display window.
   - The address display time and method can differ by the indoor unit type.
3. Reset the remote controller to use the general operation mode.

Dip Switch Setting of Indoor unit PCB

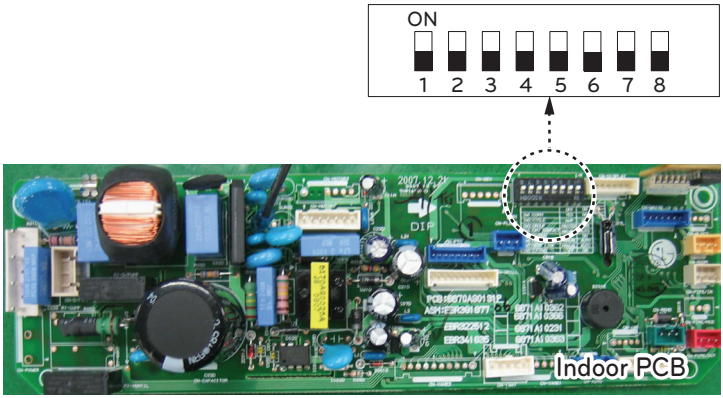

	Function	Description	Setting Off	Setting On	Default
SW3	Group Control	Selection of Master or Slave	Master	Slave	Off
SW4	Dry Contact Mode	Selection of Dry Contact Mode	Wired/Wireless remote controller Selection of Manual or Auto operation Mode	Auto	Off

NOTE

Please refer to the wired remote controller accessory manual for more details about ‘Group Control’ & ‘Dry Contact Mode’.

LG

Life's Good