LG
Life's Good

ENGLISH

INSTALLATION MANUAL

Damper Controller

- Please read this installation manual completely before installing the product.
- Installation work must be performed in accordance with the national wiring standards by authorized personnel only.
- Please retain this installation manual for future reference after reading it thoroughly.

P/NO : 3828A20132W

www.lg.com

TIPS FOR SAVING ENERGY

Here are some tips that will help you minimize the power consumption when you use the air conditioner. You can use your air conditioner more efficiently by referring to the instructions below:

- Do not cool excessively indoors. This may be harmful for your health and may consume more electricity.
- Block sunlight with blinds or curtains while you are operating the air conditioner.
- Keep doors or windows closed tightly while you are operating the air conditioner.
- Adjust the direction of the air flow vertically or horizontally to circulate indoor air.
- Speed up the fan to cool or warm indoor air quickly, in a short period of time.
- Open windows regularly for ventilation as the indoor air quality may deteriorate if the air conditioner is used for many hours.
- Clean the air filter once every 2 weeks. Dust and impurities collected in the air filter may block the air flow or weaken the cooling / dehumidifying functions.

For your records

Staple your receipt to this page in case you need it to prove the date of purchase or for warranty purposes. Write the model number and the serial number here:

Model number :

Serial number :

You can find them on a label on the side of each unit.

Dealer's name :

Date of purchase :

IMPORTANT SAFETY INSTRUCTIONS

READ ALL INSTRUCTIONS BEFORE USING THE APPLIANCE.

Always comply with the following precautions to avoid dangerous situations and ensure peak performance of your product

⚠ WARNING

It can result in serious injury or death when the directions are ignored

⚠ CAUTION

It can result in minor injury or product damage when the directions are ignored

⚠ WARNING

- Installation or repairs made by unqualified persons can result in hazards to you and others.
- Installation of all field wiring and components MUST conform with local building codes or, in the absence of local codes.
- The information contained in the manual is intended for use by a qualified service technician familiar with safety procedures and equipped with the proper tools and test instruments.
- Failure to carefully read and follow all instructions in this manual can result in equipment malfunction, property damage, personal injury and/or death.

Installation

- Don't install the controller in the nearby computer, automatic door, elevator.
  - Otherwise, it will cause the abnormal operation.
- Don't install the controller in the nearby extremely humid or trembling area.
  - There is risk of product damage.
- Avoid direct sun-rays and heat source.
  - There is risk of product damage.
- Use standard parts(connector).
  - Do not disassemble or repair the product. There is risk of fire or electric shock.
- For electrical work, contact the dealer, seller, a qualified electrician, or an Authorized Service Center.
  - Do not disassemble or repair the product. There is risk of fire or electric shock.
- Do not install, remove, or re-install the unit by yourself (customer).
  - There is risk of fire, electric shock, explosion, or injury.
- For installation, always contact the dealer or an Authorized Service Center.
  - There is risk of fire, electric shock, explosion, or injury.
- Turn the main power off when cleaning, manitaining or installing the product.
  - There is risk of fire, electric shock.

Operation

- When the product is soaked (flooded or submerged), contact an Authorized Service Center.
  - There is risk of fire or electric shock.
- Be cautious that water could not enter the product.
  - There is risk of fire, electric shock, or product damage.
- Don’t handle the controller with wet-hand.
  - There is risk of fire or electric shock.
- Don’t pull the lead wire.
  - There is risk of fire, electric shock, or product damage.
- Do not lay on heavy things on power cords.
  - It may cause fire or electric shock.

TABLE OF CONTENTS

2 TIPS FOR SAVING ENERGY

3 IMPORTANT SAFETY INSTRUCTIONS

5 COMPONENTS

6 FUNCTIONS & SETTING THE NUMBER OF ZONES

7 SETTING THE REMOTE CONTROLLER

8 HOW TO INSTALL

9 ATTENTION

10 CIRCUIT DIAGRAM

11 TEST OPERATION

11 TROUBLESHOOTING

COMPONENTS

1. Damper Controller Assembly .....1 EA
2. Cover .....1 EA
3. Screw .....2 EA
4. Installation Manual .....1 EA

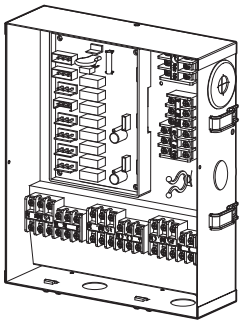

Damper Controller Assembly

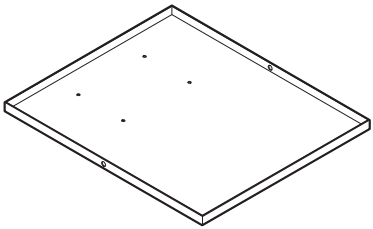

Cover

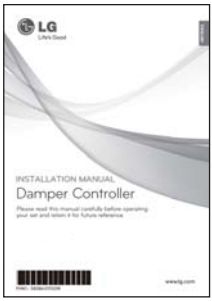

Installation Manual

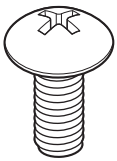

Screw

FUNCTIONS & SETTING THE NUMBER OF ZONES

1. Wired remote controller controlls on/off of damper controller.
2. Maximum controllable number of damper controller is 8.
3. Fan starts operation 60 seconds later after damper controller operation.
4. It's possible to control only in zone new type.
5. If you connect two remote controllers with one indoor unit, you must set the zone number both remote controllers.

SETTING THE REMOTE CONTROLLER

Installer Setting - Setting the Zone Number Installed

CAUTION

- If you set zone number incorrectly, the product may malfunction especially in zone control. This function must be carried out by a certificated-technician.
- If you connect two remote controllers with one indoor unit, you must change the 'zone number installed' of both remote controllers with same value.

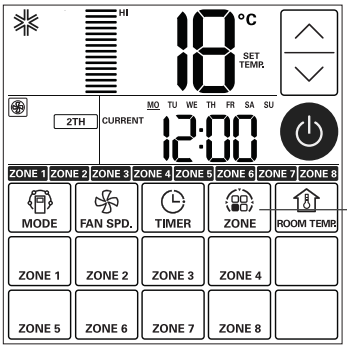

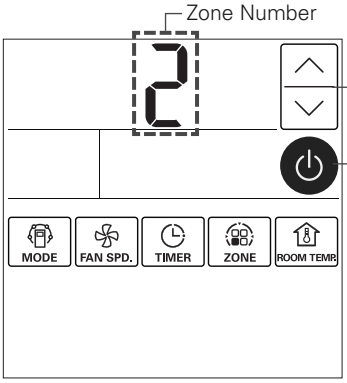

1 Press the ZONE button for 3secs.



2 Press the button to increase/decrease the installed number of zone .
You can select zone number from 2 to 8.

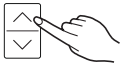

3 Press the button to confirm.



HOW TO INSTALL

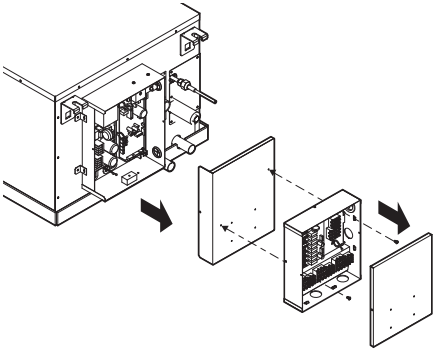

1. Open the cover of indoor unit control box and damper controller ,and Assemble the damper controller to the cover of indoor unit control box

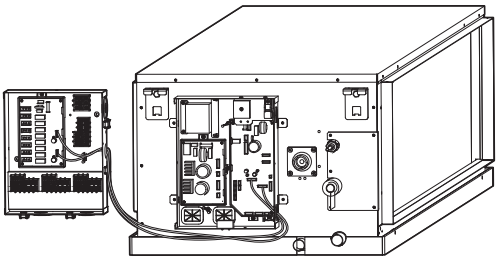

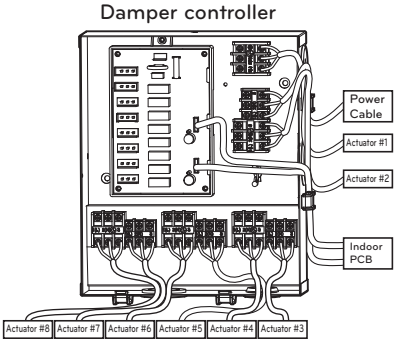

2. Connect the lead wires between main PCB and damper controller.

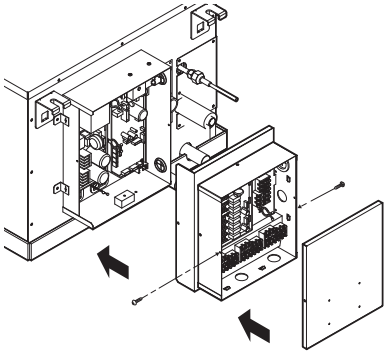

3. Connect the power cord to Damper controller and actuator. This wiring work should be performed in Accordance with notional wiring standards and recommended wiring duct and conduit.

CAUTION

More than 3 Damper Acturator installation needed to take out knock out

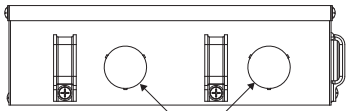

4. Assemble the damper controller to indoor unit and then assemble cover of damper controller.

ATTENTION

1. Be sure to fasten the wire with cord clamp in the damper controller case.
2. Be sure to check damper controller is operating nomally when electrical wiring is completed.
3. It is possible to use 3-position control actuator(on/off).

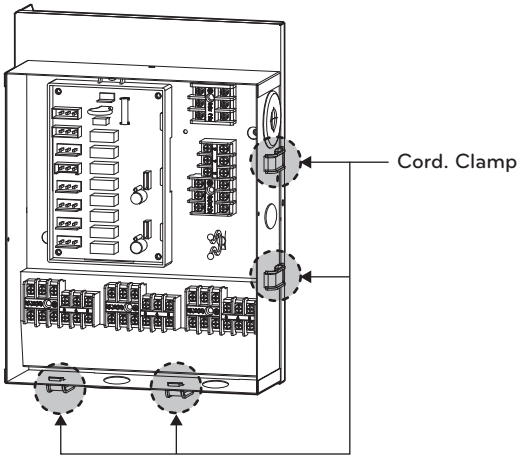

4. Determine the specification of damper controller's cord by adding up the power consumption of all actuators used.
5. The total current must not exceed 5 amps.
6. According to an acturator, if necessary, a transformer can be used.
7. Belows are listed kinds of acturators that can be used.
   ① Voltage : 220-240V
   ② Wiring diagram of acturator

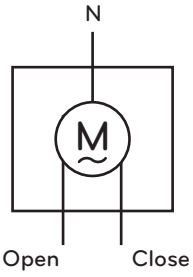

3-position control actuator

ENGLISH

CIRCUIT DIAGRAM

1. Be sure to fasten the wire with cord clamp in the damper controller case.
2. Be sure to check damper controller is operating nomally when electrical wiring is completed.
3. It is possible to use 3-position control actuator(on/off).

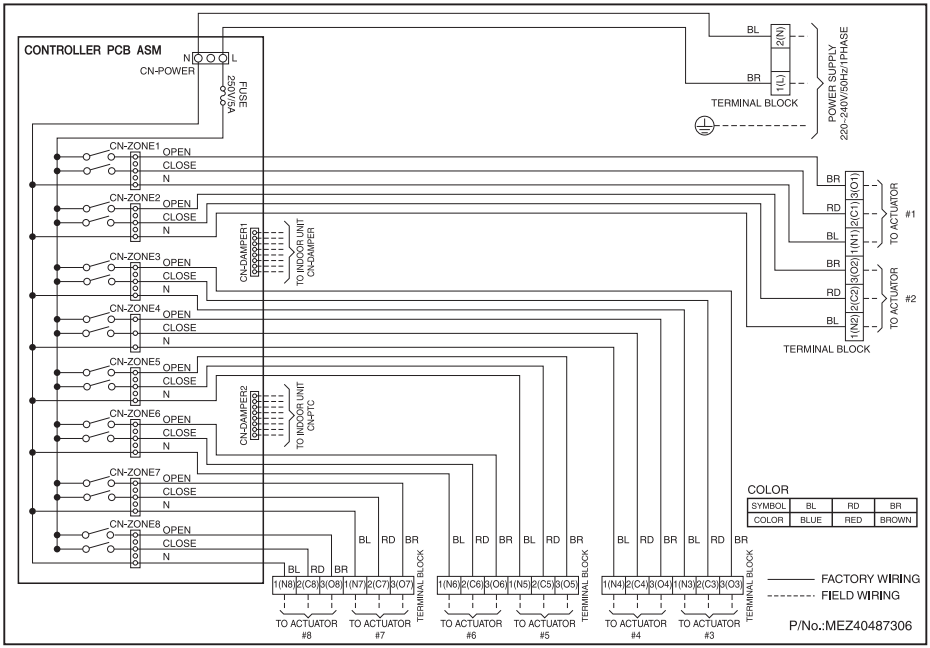

* This Product uses a separate 220~240V Power Supply with other products.

* Power Cable (Included Earth) : 3C x 1.0mm^2(CV)

TEST OPERATION

- Before test operation, be sure all information is understood completely, and follow the guide-line of manual.
- Connect the power and turn on with wired remote controller.
- Check the damper operation when wired remote controller is controlled.
- At damper controller operating, check abnormal noise.

TROUBLE STOOTING

Problem	Cause	Remedy
Damper Controller does not work	No power supply	Check electrical connection and Voltage of the power supply.
	Wring is wrong	Check electrical connection of the Actuator
	Damper controller is broken	Check electrical and mechanical part.


LG
Life's Good