LG
Life's Good

ENGLISH | ITALIANO | ESPAÑOL | FRANÇAIS | DEUTSCH | ΕΛΛΗΝΙΚΆ | ČEŠTINA | NEDERLANDS | POLSKI | LIMBA ROMÂNĂ | PORTUGUESE

MAGYAR | БЪЛГАРСКИ | SRPSKI | HRVATSKI | SVENDKA | NORSK | SUOMI | DANSK

INSTALLATION MANUAL

AIR CONDITIONER

- Please read this installation manual completely before installing the product.
- Installation work must be performed in accordance with the national wiring standards by authorized personnel only.
- Please retain this installation manual for future reference after reading it thoroughly.

TYPE : Ceiling Concealed Duct - Low Static

P/NO : MFL67798104

www.lg.com

TABLE OF CONTENTS

Installation Requirements	Required Parts	Required Tools
Installation Parts 3		
Safety Precautions.....4		
Installation		
Selection of the best location 7	❏ Four type "A" screws ❏ Connecting cable	❏ Level gauge ❏ Screw driver ❏ Electric drill ❏ Hole core drill
Ceiling opening dimension and hanging bolt location 8	❏ Pipes: Gas side Liquid side (Refer to Product Data) ❏ Insulation materials ❏ Additional drain pipe	❏ Flaring tool set ❏ Specified torque wrenches (different depending on model No.) ❏ Spanner .....Half union
Indoor Unit Installation.....9		
Wiring Connection 9		❏ A glass of water ❏ Screw driver
Part name and functions 11		
Checking the Drainage.....12		❏ Hexagonal wrench ❏ Gas-leak detector ❏ Vacuum pump ❏ Gauge manifold
Drain Piping 13		
Dip Switch Setting 15		❏ Owner's manual ❏ Thermometer
Group Control Setting.....16		
E.S.P Table 21		

Installation Parts

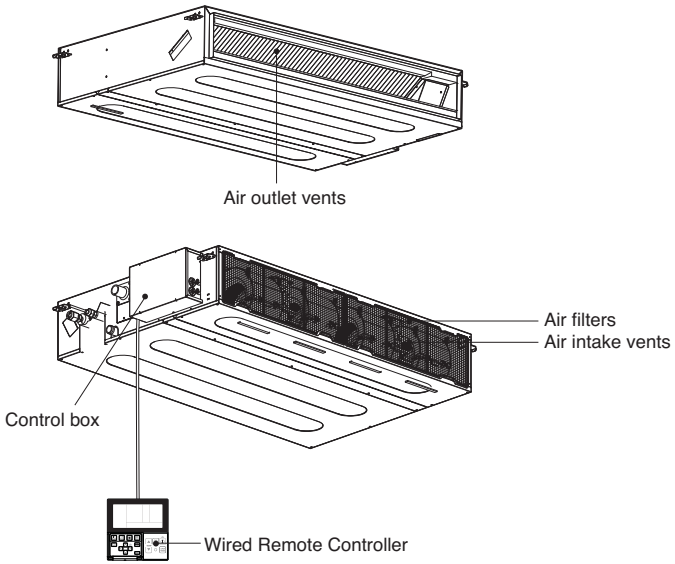

Name	Drain hose	Clamp metal	Washer for hanging bracket	Clamp (Tie Wrap)	Insulation for fitting	Other
Quantity	1 EA	2 EA	8 EA	4 EA	1 set	
Shape					for gas pipe for liquid pipe	• Owner's manual • Installation manual

• Screws for fixing panels are attached to decoration panel.

Safety Precautions

To prevent injury to the user or other people and property damage, the following instructions must be followed.
- Be sure to read before installing the air conditioner.
- Be sure to observe the cautions specified here as they include important items related to safety.
- Incorrect operation due to ignoring instruction will cause harm or damage. The seriousness is classified by the following indications.

⚠ WARNING	This symbol indicates the possibility of death or serious injury.
⚠ CAUTION	This symbol indicates the possibility of injury or damage to properties only.

- Meanings of symbols used in this manual are as shown below.

⃠	**Be sure not to do.**
❗	**Be sure to follow the instruction.**

⚠ WARNING

Installation

Do not use a defective or underrated circuit breaker. Use this appliance on a dedicated circuit.

- There is risk of fire or electric shock.

For electrical work, contact the dealer, seller, a qualified electrician, or an Authorized Service Center.

- Do not disassemble or repair the product. There is risk of fire or electric shock.

Always ground the product.

- There is risk of fire or electric shock.

Install the panel and the cover of control box securely.

- There is risk of fire or electric shock.

Always install a dedicated circuit and breaker.

- Improper wiring or installation may cause fire or electric shock.

Use the correctly rated breaker or fuse.

- There is risk of fire or electric shock.

Do not modify or extend the power cable.

- There is risk of fire or electric shock.

Do not let the air conditioner run for a long time when the humidity is very high and a door or a window is left open.

- Moisture may condense and wet or damage furniture.

Be cautious when unpacking and installing the product.

- Sharp edges could cause injury. Be especially careful of the case edges and the fins on the condenser and evaporator.

For installation, always contact the dealer or an Authorized Service Center.

- There is risk of fire, electric shock, explosion, or injury.

Do not install the product on a defective installation stand.

- It may cause injury, accident, or damage to the product.

Be sure the installation area does not deteriorate with age.

- If the base collapses, the air conditioner could fall with it, causing property damage, product failure, and personal injury.

Use a vacuum pump or Inert (nitrogen) gas when doing leakage test or air purge. Do not compress air or Oxygen and Do not use Flammable gases. Otherwise, it may cause fire or explosion.

- There is the risk of death, injury, fire or explosion.

■ Operation

Do not store or use flammable gas or combustibles near the product.

- There is risk of fire or failure of product.

⚠ CAUTION

■ Installation

Always check for gas (refrigerant) leakage after installation or repair of product.

- Low refrigerant levels may cause failure of product.

Install the drain hose to ensure that water is drained away properly.

- A bad connection may cause water leakage.

Keep level even when installing the product.

- To avoid vibration or water leakage.

Do not install the product where the noise or hot air from the outdoor unit could damage the neighborhoods.

- It may cause a problem for your neighbors.

Use two or more people to lift and transport the product.

- Avoid personal injury.

Do not install the product where it will be exposed to sea wind (salt spray) directly.

- It may cause corrosion on the product. Corrosion, particularly on the condenser and evaporator fins, could cause product malfunction or inefficient operation.

If you eat the liquid from the batteries, brush your teeth and see doctor. Do not use the remote if the batteries have leaked.

- The chemicals in batteries could cause burns or other health hazards.

Installation

Selection of the best location

Indoor unit

Install the air conditioner in the location that satisfies the following conditions.

- The place shall easily bear a load exceeding four times the indoor unit's weight.
- The place shall be able to inspect the unit as the figure.
- The place where the unit shall be leveled.
- The place shall easily connect with the outdoor unit.
- The place where the unit is not affected by an electrical noise.
- The place where air circulation in the room will be good .
- There should not be any heat source or steam near the unit

Confirm the positional relationship between the unit and suspension bolts.

- Installation the ceiling opening to clean the filter or service under the product.

(Unit: mm)

Capacity (kBtu/h)	A	B
5/7/9	800	800
12/15/18	800	1000
21/24	800	1200

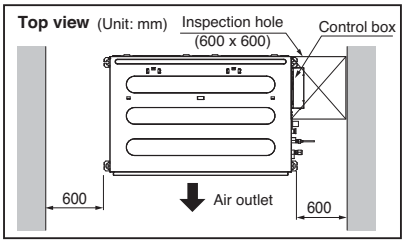

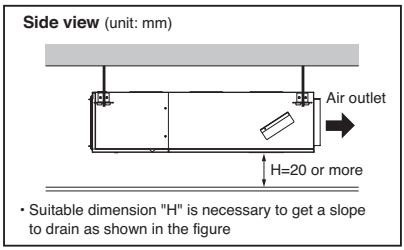

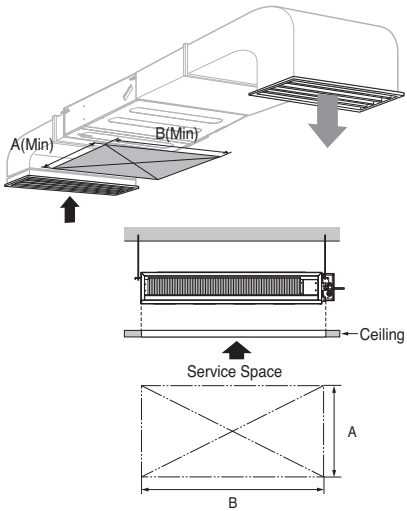

Ceiling dimension and hanging bolt location

Installation of Unit

Install the unit above the ceiling correctly.

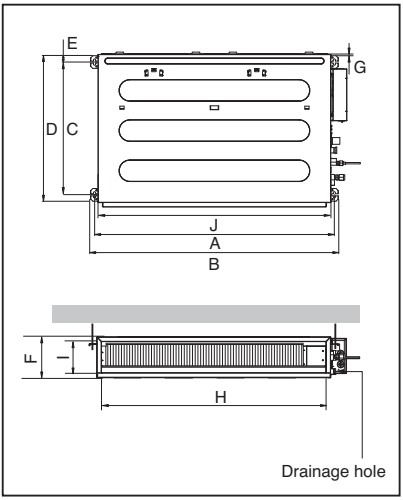

POSITION OF SUSPENSION BOLT

- Apply a joint-canvas between the unit and duct to absorb unnecessary vibration.
- Apply a filter Accessory at air return hole.

(Unit:mm)

Dimension / Capacity(kBtu/h)	A	B	C	D	E	F	G	H	I	J
5/7/9	733	772	628	700	36	190	20	660	155	700
12/15/18	933	972	628	700	36	190	20	860	155	900
21/24	1133	1172	628	700	36	190	20	1060	155	1100

※ Install the unit leaning to a drainage hole side as a figure for easy water drainage.

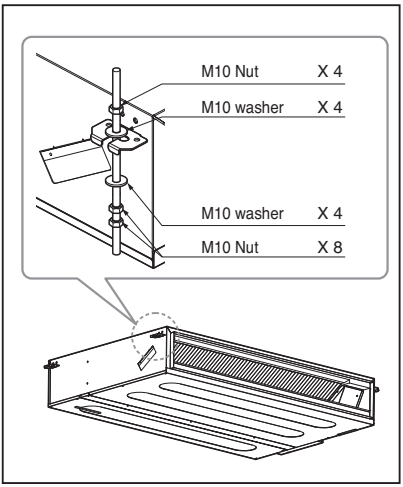

POSITION OF CONSOLE BOLT

- A place where the unit will be leveled and that can support the weight of the unit.
- A place where the unit can withstand its vibration.
- A place where service can be easily performed.

Indoor Unit Installation

- Select and mark the position for fixing bolts.
- Drill the hole for set anchor on the face of ceiling.

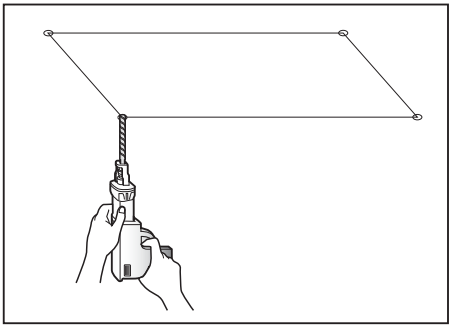

- Insert the set anchor and washer onto the suspension bolts for locking the suspension bolts on the ceiling.
- Mount the suspension bolts to the set anchor firmly.
- Secure the installation plates onto the suspension bolts (adjust level roughly) using nuts, washers and spring washers.

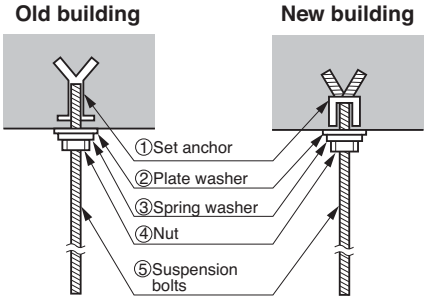

CAUTION : Tighten the nut and bolt to prevent unit falling.

Wiring Connection

Connect the wires to the terminals on the control board individually according to the outdoor unit connection.

- Ensure that the color of the wires of outdoor unit and the terminal No. are the same as those of indoor unit respectively.

L1/L2/L3 Series

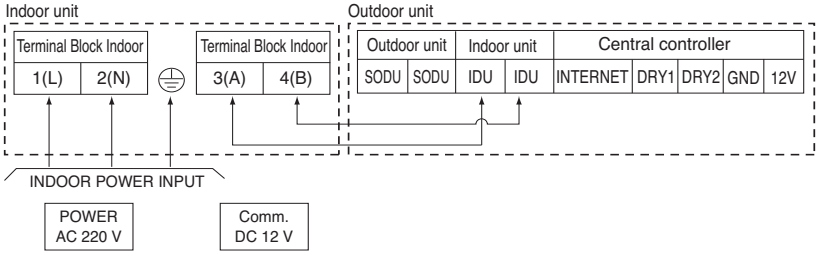

WARNING : Make sure that the screws of the terminal are free from looseness.

CAUTION : The Power cord connected to the unit should be selected according to the following specifications. (Cable type CV approved by IEC 60502-1)

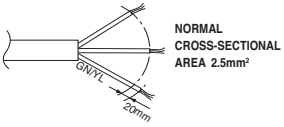

CAUTION:

After the confirmation of the above conditions, prepare the wiring as follows:

1) Never fail to have an individual power specialized for the air conditioner. As for the method of wiring, be guided by the circuit diagram posted on the inside of control box cover.

2) Provide a circuit breaker switch between power source and the unit.

3) The screws which fasten the wiring in the casing of electrical fittings are liable to come loose from vibrations to which the unit is subjected during the course of transportation. Check them and make sure that they are all tightly fastened. (If they are loose, it could give rise to burn-out of the wires.)

4) Specification of power source

5) Confirm that electrical capacity is sufficient.

6) Be sure that the starting voltage is maintained at more than 90 percent of the rated voltage marked on the name plate.

7) Confirm that the cable thickness is as specified in the power sources specification. (Particularly note the relation between cable length and thickness.)

8) Never fail to equip a leakage breaker where it is wet or moist.

9) The following troubles would be caused by voltage drop-down.

- Vibration of a magnetic switch, damage on the contact point, fuse breaking, disturbance by the normal function of an overload protection device.
- Proper starting power is not given to the compressor.

Part name and functions

• Low static duct type in case of suction from back side.

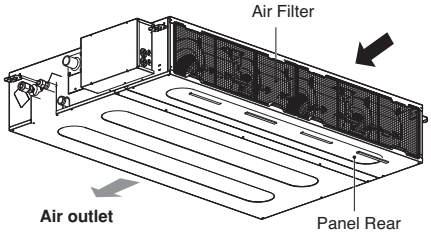

• Low static duct type in case of suction from bottom side.
In this case, reposition the Panel rear part and bend the lower part so that it will match the hole position of cabinet case as shown in the figure.

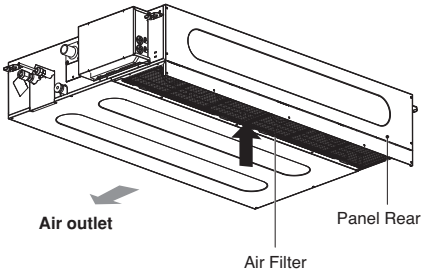

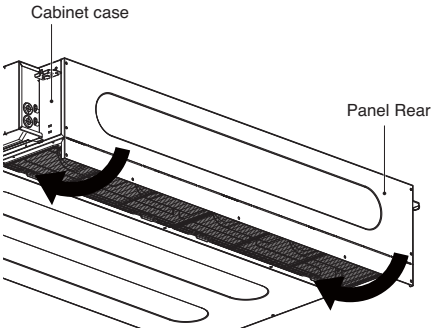

INSULATION, OTHERS

Insulate the joint and tubes completely.

THERMAL INSULATION All thermal insulation must comply with local requirement.

INDOOR UNIT

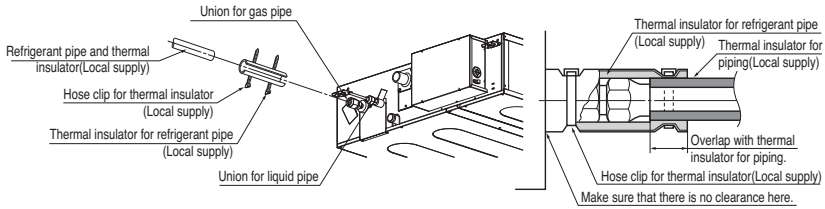

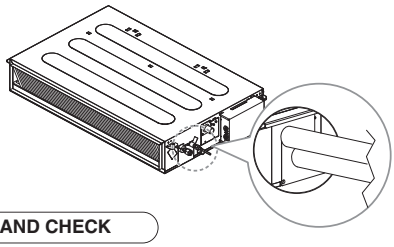

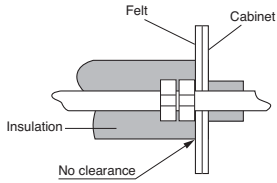

TEST AND CHECK

■ ***After all workings are finished, check the working and operation.***

- Air distribution ..... Is the air circulation good?
- Drain ..... Is the drainage smoothly and no sweating?
- Gas leakage ..... Is the piping connection correctly?
- Wiring ..... Is the wiring connection correctly?
- Lock-bolt ..... Is the lock-bolt of compressor loosened?
- Insulation Is the unit fully insulated?
- Ground Is the unit safely grounded?

Checking the Drainage

1. Remove the Air Filter.

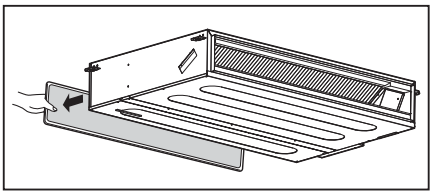

2. Check the drainage.

- Spray one or two glasses of water upon the evaporator.
- Ensure that water flows drain hose of indoor unit without any leakage.

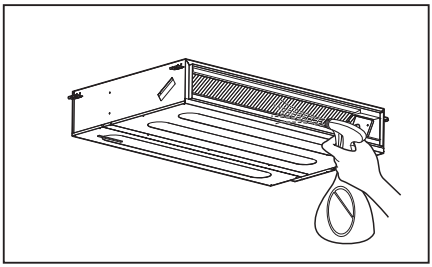

CAUTION

1. **Install declination** of the indoor unit is very **important for the drain** of the duct type air conditioner.
2. Minimum thickness of the insulation for the connecting pipe shall be 19mm.

Front of view

- The unit must be horizontal or declined to the drain hose connected when finished installation.

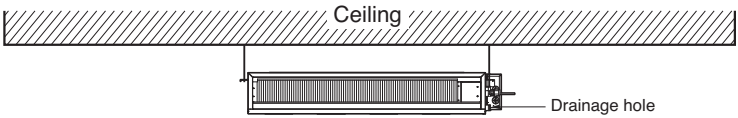

Drain Pump use

Drain Piping

- Drain piping must have down-slope (1/50 to 1/100): be sure not to provide up-and-down slope to prevent reversal flow.
- During drain piping connection, be careful not to exert extra force on the drain port on the indoor unit.
- The outside diameter of the drain connection on the indoor unit is 32mm.

Piping material: Polyvinyl chloride pipe VP-25 and pipe fittings

- Be sure to install heat insulation on the drain piping.

Heat insulation material: Polyethylene foam with thickness more than 8 mm.

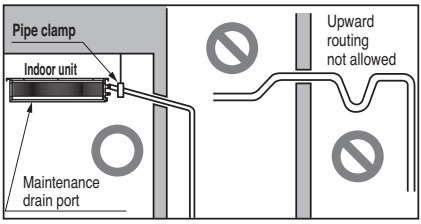

Drain test

The air conditioner uses a drain pump to drain water.
Use the following procedure to test the drain pump operation:

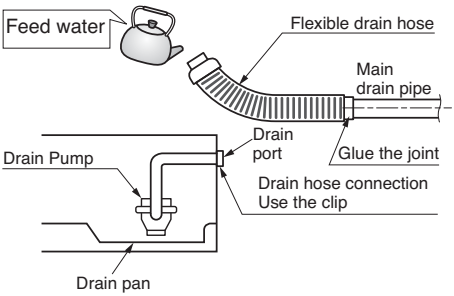

- Connect the main drain pipe to the exterior and leave it provisionally until the test comes to an end.
- Feed water to the flexible drain hose and check the piping for leakage.
- Be sure to check the drain pump for normal operating and noise when electrical wiring is complete.
- When the test is complete, connect the flexible drain hose to the drain port on the indoor unit.

CAUTION : The supplied flexible drain hose should not be curved, neither screwed. The curved or screwed hose may cause a leakage of water.

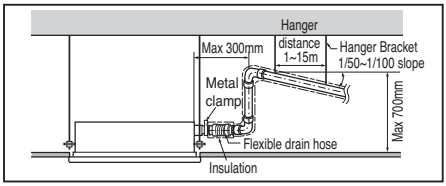

WIERED REMOTE CONTROLLER INSTALLATION

• Since the room temperature sensor is in the remote controller, the remote controller box should be installed in a place away from direct sunlight, high humidity and direct supply of cold air to maintain proper space temperature.
Install the remote controller about 5ft(1.5m) above the floor in an area with good air circulation at an average temperature.

Do not install the remote controller where it can be affected by:

- Drafts, or dead spots behind doors and in corners.
- Hot or cold air from ducts.
- Radiant heat from sun or appliances.
- Concealed pipes and chimneys.
- Uncontrolled areas such as an outside wall behind the remote controller.
- This remote controller is equipped with a seven segment LED. display. For proper display of the remote controller LED's, the remote controller should be installed properly as shown in Fig.1.
(The standard height is 1.2~1.5 m from floor level.)

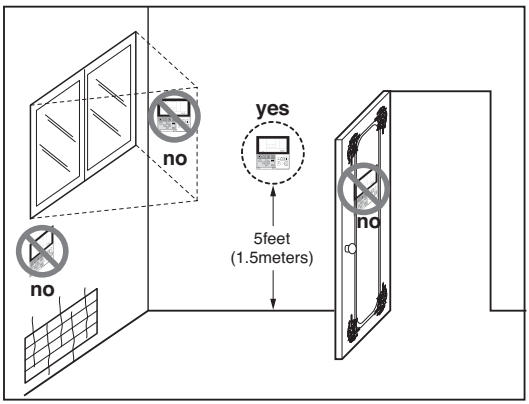

Fig.1 Typical locations for remote controller

Note :

While installing accessory parts such as Wired remote controller, Emergency heater etc, please refer the respected installation manual provided with them.

HAND OVER

Teach the customer the operation and maintenance procedures, using the operation manual.
(air filter cleaning, temperature control, etc.)

Dip Switch Setting

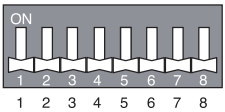

	Function	Description	Setting Off	Setting On	Default
SW1	Communication	N/A (Default)	-	-	Off
SW2	Cycle	N/A (Default)	-	-	Off
SW3	Group Control	Selection of Master or Slave	Master	Slave	Off
SW4	Dry Contact Mode	Selection of Dry Contact Mode	Wired/Wireless remote controller Selection of Manual or Auto operation Mode	Auto	Off
SW5	Installation	Fan continuous operation	Continuous operation Removall	-	Off
SW6	Heater linkage	N/A	-	-	Off
SW7	Ventilator linkage	Selection of Ventilator linkage	Linkage Removal	Working	Off
	Vane selection (Console)	Selection of up/down side Vane	Up side + Down side Vane	Up side Vane Only	
	Region selection	Selection tropical region	General model	Tropical model	
SW8	Etc.	Spare	-	-	Off

⚠ CAUTION

For Multi V Models, Dip switch 1, 2, 6, 8 must be set OFF.

Group Control Setting

1. Group Control 1

■ **Wired remote controller 1 + Standard Indoor Units**

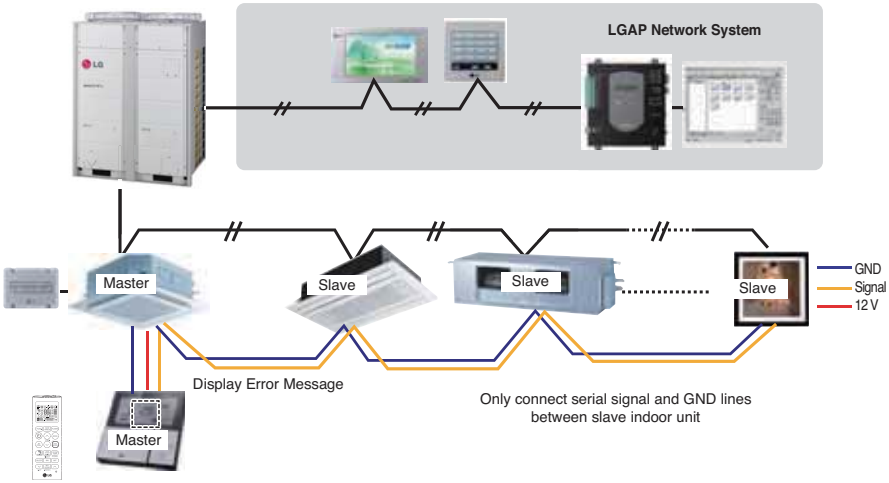

■ **Dip Switch in PCB (Cassette and Duct Type indoor units)**

① **Master Setting**
- No. 3 Off

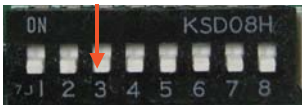

② **Slave Setting**
- No. 3 On

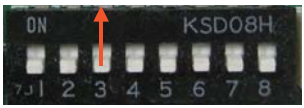

1. It is possible to 16 indoor units(Max) by one wired remote controller.
Set only one indoor unit to Master, set the others to Slave.

2. It is possible to connect with every type of indoor units.

3. It is possible to use wireless remote controller at the same time.

4. It is possible to connect with Dry Contact and Central controller at the same time.
- The Master indoor unit is possible to recognize Dry Contact and Central Controller only.
- In case of Central controller and Group controller at the same time, it is possible to connect standard 2series indoor units or later since Feb. 2009.
- In case of Central controller setting, the Central controller can control indoor units after setting only the address of master indoor unit.
- Slave indoor unit will be operated like master indoor unit.
- Slave indoor unit can not be individually controlled by Central controller.
- Some remote controller can't perform with Dry Contact and Central controller at the same time. So contact us further information about it.

5. In case of any error occurs at indoor unit, display on the wired remote controller.
Exception of the error indoor unit, an individual indoor unit control possibility.

6. In case of Group Control, it is possible to use following functions.
- Selection of operation options (operation/stop/mode/set temperature)
- Control of flow rate (High/Middle/Low)
- It is not possible at some functions.

❊ Master/Slave setting of indoor units be set possible using a PCB Dip Switch.

❊ It is possible to connect indoor units since Feb. 2009.
In the other cases, please contact LGE.

❊ It can be the cause of malfuctions when there is no setting of master and slave.

2. Group Control 2

■ **Wired remote controllers + Standard Indoor Units**

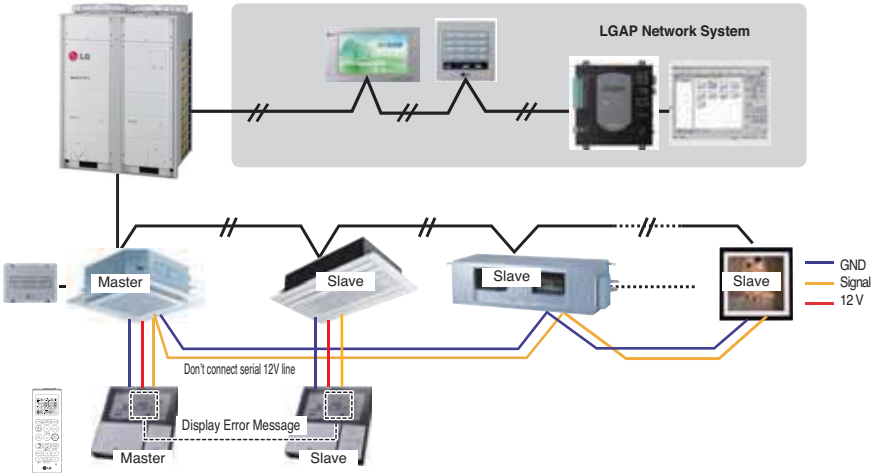

❊ **It is possible to control N indoor units by wired remote controller M units. (M+N≤17 Units)**
Set only one indoor unit to Master, set the others to Slave.
Set only one wired remote controller to Master, set the others to Slave.
Other than those, it is same with the Group Control 1.

3. Group Control 3

■ **Mixture connection with indoor units and Fresh Air Intake Unit**

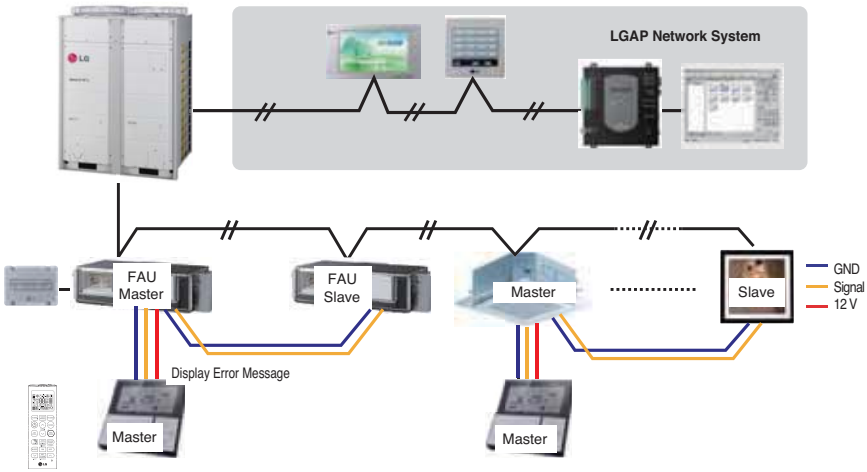

❊ **In case of connecting with standard indoor unit and Fresh Intake Unit, separate Fresh Air Intake Unit with standard units.**
(Because setting temperature are different.)

❊ **Other than those, it is same with Group Control 1.**

* FAU : Fresh Air Intake Unit
Standard: Standard Indoor Unit

4. 2 Remote Control

■ **Wired remote controller 2 + Indoor unit 1**

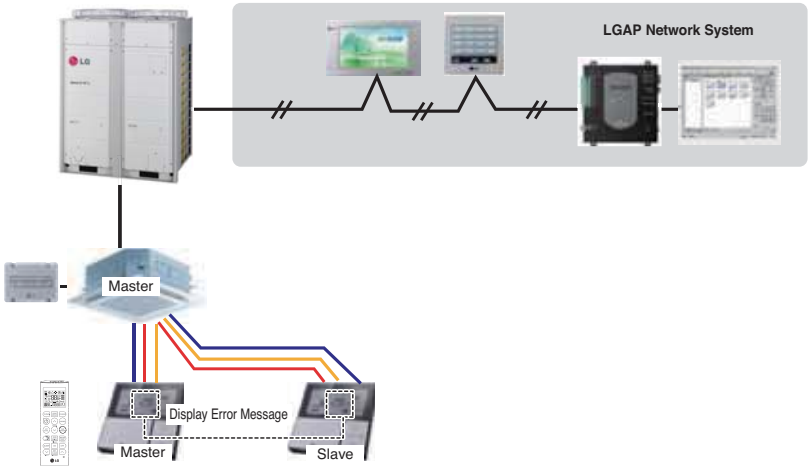

1. **It is possible to connect two wired remote controllers with one indoor unit.**
2. **Every types of indoor unit is possible to connect two remote controller.**
3. **It is possible to use wireless remote controller at the same time.**
4. **It is possible to connect with Dry Contact and Central controller at the same time.**
5. **In case of any error occurs at indoor unit, display on the wired remote controller.**
6. **There isn't limits of indoor unit function.**

❈ Maximum 2wired remote controllers can be connected with 1 indoor unit.

5. Accessories for group control setting

It is possible to set group control by using below accessories.

Indoor unit 2 EA +Wired remote controller	Indoor unit 1 EA +Wired remote controller 2EA
❊ PZCWRCG3 cable used for connection 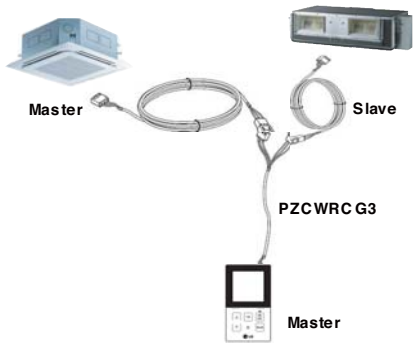	❊ PZCWRC2 cable used for connection 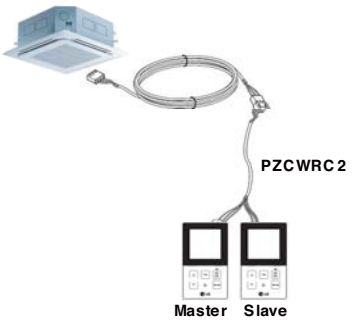

E.S.P Table

ARNU05GL1G2, ARNU07GL1G2, ARNU09GL1G2 (Unit : CMM)

Setting Value	Static Pressure(mmAq(Pa))					
	0 (0)	1 (10)	2 (20)	3 (29)	4 (39)	5 (49)
60	-	-	-	-	-	-
65	5.03	-	-	-	-	-
70	5.60	4.85	-	-	-	-
75	6.19	5.44	4.57	-	-	-
80	6.79	6.05	5.17	-	-	-
85	7.41	6.67	5.80	4.80	-	-
90	8.05	7.31	6.43	5.44	-	-
95	8.71	7.96	7.09	6.09	4.97	-
100	9.38	8.63	7.76	6.76	5.64	-
105	10.07	9.32	8.45	7.45	6.33	5.08
110	-	10.03	9.16	8.16	7.04	5.79
115	-	-	9.88	8.88	7.76	6.51
120	-	-	-	9.62	8.50	7.25
125	-	-	-	10.38	9.26	8.01
130	-	-	-	-	10.03	8.78

ARNU12GL2G2, ARNU15GL2G2, ARNU18GL2G2 (Unit : CMM)

Setting Value	Static Pressure(mmAq(Pa))					
	0 (0)	1 (10)	2 (20)	3 (29)	4 (39)	5 (49)
75	6.50	-	-	-	-	-
80	7.34	6.70	-	-	-	-
85	8.20	7.55	6.69	-	-	-
90	9.07	8.43	7.56	6.47	-	-
95	9.96	9.32	8.45	7.36	-	-
100	10.87	10.22	9.36	8.27	6.96	-
105	11.79	11.15	10.28	9.19	7.89	6.35
110	12.73	12.09	11.22	10.14	8.83	7.30
115	13.69	13.05	12.18	11.09	9.78	8.25
120	14.67	14.02	13.16	12.07	10.76	9.23
125	15.66	15.01	14.15	13.06	11.75	10.22
130	16.67	16.02	15.16	14.07	12.76	11.23
135	-	-	16.18	15.10	13.79	12.26
140	-	-	-	16.14	14.83	13.30
145	-	-	-	-	15.89	14.36

ARNU21GL3G2, ARNU24GL3G2 (Unit : CMM)

Setting Value	Static Pressure(mmAq(Pa))					
	0 (0)	1 (10)	2 (20)	3 (29)	4 (39)	5 (49)
85	10.19	-	-	-	-	-
90	12.18	10.71	11.09	-	-	-
95	13.81	12.34	12.19	-	-	-
100	15.16	13.69	13.38	10.71	-	-
105	16.30	14.83	14.36	11.85	-	-
110	17.31	15.85	15.23	12.86	10.97	-
115	18.27	16.80	16.07	13.82	11.93	-
120	19.26	17.79	16.93	14.80	12.91	10.49
125	20.34	18.87	17.89	15.88	13.99	11.57
130	21.60	20.13	19.01	17.14	15.25	12.83
135	-	21.64	20.36	18.66	16.76	14.35
140	-	-	22.01	20.50	18.61	16.19
145	-	-	-	22.75	20.86	18.44

Note :

1. The above table shows the correlation between the air rates and E.S.P.
2. Please refer wired remote controller manual for E.S.P setting procedure.

LG
Life's Good