LG
Life's Good

ENGLISH

INSTALLATION MANUAL
AIR CONDITIONER

- Please read this installation manual completely before installing the product.
- Installation work must be performed in accordance with the national wiring standards by authorized personnel only.
- Please retain this installation manual for future reference after reading it thoroughly.

TYPE : ART COOL Mirror

P/NO : MFL67855418

www.lg.com

TIPS FOR SAVING ENERGY

Here are some tips that will help you minimize the power consumption when you use the air conditioner. You can use your air conditioner more efficiently by referring to the instructions below:

- Do not cool excessively indoors. This may be harmful for your health and may consume more electricity.
- Block sunlight with blinds or curtains while you are operating the air conditioner.
- Keep doors or windows closed tightly while you are operating the air conditioner.
- Adjust the direction of the air flow vertically or horizontally to circulate indoor air.
- Speed up the fan to cool or warm indoor air quickly, in a short period of time.
- Open windows regularly for ventilation as the indoor air quality may deteriorate if the air conditioner is used for many hours.
- Clean the air filter once every 2 weeks. Dust and impurities collected in the air filter may block the air flow or weaken the cooling / dehumidifying functions.

For your records

Staple your receipt to this page in case you need it to prove the date of purchase or for warranty purposes. Write the model number and the serial number here:

Model number :

Serial number :

You can find them on a label on the side of each unit.

Dealer's name :

Date of purchase :

IMPORTANT SAFETY INSTRUCTIONS

READ ALL INSTRUCTIONS BEFORE USING THE APPLIANCE.

Always comply with the following precautions to avoid dangerous situations and ensure peak performance of your product

⚠ WARNING

It can result in serious injury or death when the directions are ignored

⚠ CAUTION

It can result in minor injury or product damage when the directions are ignored

⚠ WARNING

- Installation or repairs made by unqualified persons can result in hazards to you and others.
- Installation work must be performed in accordance with the National Electric Code by qualified and authorized personnel only.
- The information contained in the manual is intended for use by a qualified service technician familiar with safety procedures and equipped with the proper tools and test instruments.
- Failure to carefully read and follow all instructions in this manual can result in equipment malfunction, property damage, personal injury and/or death.

Installation

- Don't use a power cord, a plug or a loose socket which is damaged.
  - Otherwise, it may cause a fire or electrical shock.
- For electrical work, contact the dealer, seller, a qualified electrician, or an Authorized Service Center.
  - Do not disassemble or repair the product. There is risk of fire or electric shock.
- Always ground the product.
  - There is risk of fire or electric shock.
- Install the panel and the cover of control box securely.
  - There is risk of fire or electric shock.
- Always install a dedicated circuit and breaker.
  - Improper wiring or installation may cause fire or electric shock.
- Use the correctly rated breaker or fuse.
  - There is risk of fire or electric shock.
- Do not modify or extend the power cable.
  - There is risk of fire or electric shock.
- Do not let the air conditioner run for a long time when the humidity is very high and a door or a window is left open.
  - Moisture may condense and wet or damage furniture.
- Be cautious when unpacking and installing the product.
  - Sharp edges could cause injury. Be especially careful of the case edges and the fins on the condenser and evaporator.
- For installation, always contact the dealer or an Authorized Service Center.
  - There is risk of fire, electric shock, explosion, or injury.

- Do not install the product on a defective installation stand.
  - It may cause injury, accident, or damage to the product.
- Be sure the installation area does not deteriorate with age.
  - If the base collapses, the air conditioner could fall with it, causing property damage, product failure, and personal injury.
- There is a risk of fire and explosion.
  - Inert gas (nitrogen) should be used when you check plumbing leaks, cleaning or repairs of pipes etc.
    If you are using combustible gases including oxygen, product may have the risk of fires and explosions.
- Use a vacuum pump or Inert (nitrogen) gas when doing leakage test or air purge. Do not compress air or Oxygen and do not use flammable gases. Otherwise, it may cause fire or explosion.
  - There is the risk of death, injury, fire or explosion.

Operation

- Do not store or use flammable gas or combustibles near the product.
  - There is risk of fire or failure of product.

⚠ CAUTION

Installation

- Always check for gas (refrigerant) leakage after installation or repair of product.
  - Low refrigerant levels may cause failure of product.
- Install the drain hose to ensure that water is drained away properly.
  - A bad connection may cause water leakage.
- Keep level even when installing the product.
  - To avoid vibration or water leakage.
- Do not install the product where the noise or hot air from the outdoor unit could damage the neighborhoods.
  - It may cause a problem for your neighbors.
- Use two or more people to lift and transport the product.
  - Avoid personal injury.
- Do not install the product where it will be exposed to sea wind (salt spray) directly.
  - It may cause corrosion on the product. Corrosion, particularly on the condenser and evaporator fins, could cause product malfunction or inefficient operation.
- Thickness of copper pipes used are as shown “Flaring work” Table.
  - Never use copper pipes thinner than that in the table even when it is available on the market
- Do not use copper pipes having a collapsed.
  - Otherwise, the expansion valve or capillary tube may become blocked with contaminants.
- For R410A model, use piping, flare nut and tools which is specified for R410A refrigerant.
  - Using of (R22) piping, flare nut and tools may cause abnormally high pressure in the refrigerant cycle (piping), and possibly result in explosion and injury.
- It is desirable that the amount of residual oil less than 40 mg/10m.

TABLE OF CONTENTS

3 IMPORTANT SAFETY INSTRUCTIONS

6 INSTALLATION PARTS

7 INSTALLATION TOOLS

7 INSTALLATION MAP

8 INSTALLATION

8 Select the best Location
8 Fixing Installation Plate
9 Drill a Hole in the Wall
9 Flaring Work
9 - Cut the pipes and the cable
9 - Burrs removal
9 - Putting nut on
9 - Flaring work
10 - Check
10 Connecting the Piping
10 - Good case
11 - Bad case
11 - Installation of Indoor Unit
11 - Piping
12 - Connecting the installation pipe and drain hose to the indoor unit.
13 - Wrap the insulation material around the connecting portion.
13 - Finishing the indoor unit installation
14 Checking the Drainage
14 - To check the drainage.
14 - Drain piping
15 Installation of filters
15 Test Running
15 - Prepare remote controller

INSTALLATION PARTS

Name	Quantity	Shape
Installation plate	1 EA	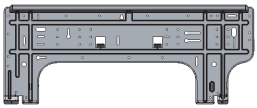 The feature can be changed according a type of model.
Type "A" screw	5 EA	
Type "B" screw	2 EA	
Type "C" screw	2 EA	
Remote control holder	1 EA	

Screws for fixing panels are attached to decoration panel.

INSTALLATION TOOLS

Figure	Name	Figure	Name
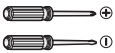	Screw driver		Multi-meter
	Electric drill		Hexagonal wrench
	Measuring tape, Knife	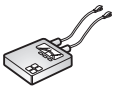	Ammeter
	Hole core drill		Gas-leak detector
	Spanner	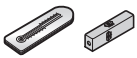	Thermometer, Level
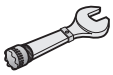	Torque wrench		Flaring tool set

INSTALLATION MAP

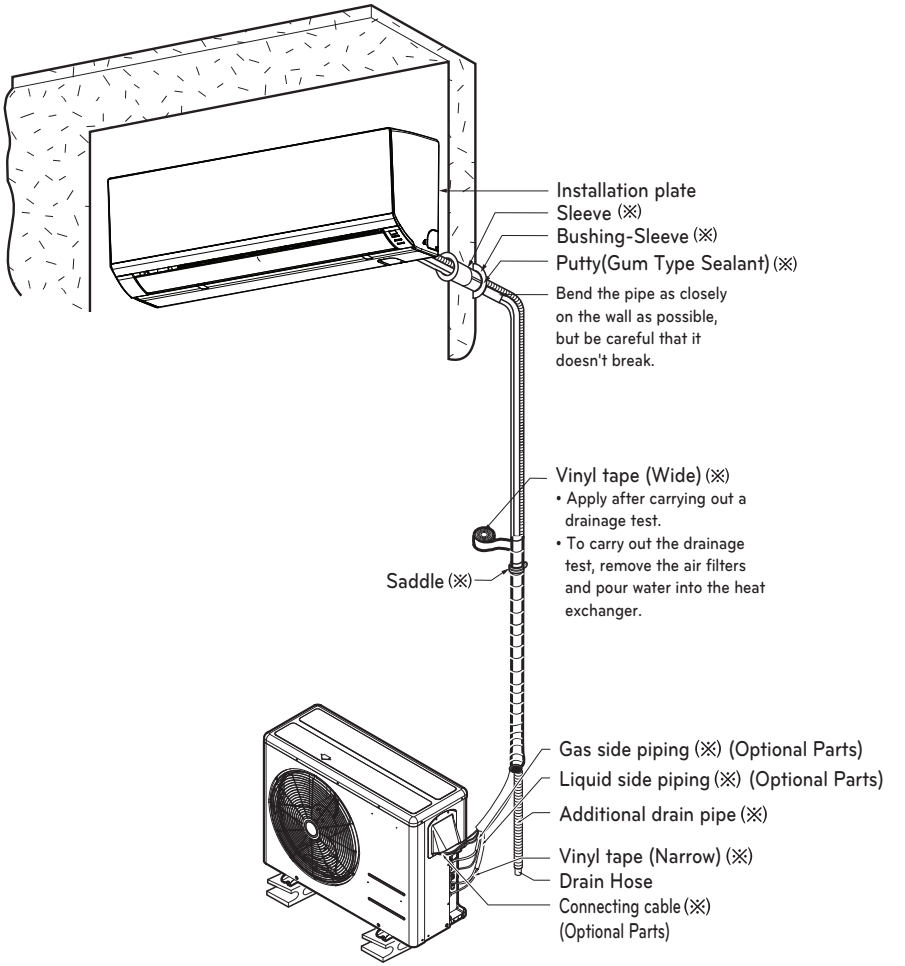

* The feature can be changed according a type of model.

NOTE

- You should purchase the installation parts.

INSTALLATION

Select the best Location

- There should not be any heat or steam near the unit.
- Select a place where there are no obstacles around of the unit.
- Make sure that condensation drainage can be conveniently routed away.
- Do not install near a doorway.
- Ensure that the interval between a wall and the left (or right) of the unit is more than 100mm. The unit should be installed as high as possible on the wall, allowing a minimum of 200mm from ceiling.
- Use a metal detector to locate studs to prevent unnecessary damage to the wall.

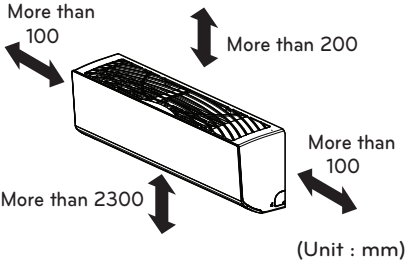

* The feature can be changed according a type of model.

CAUTION

Install the indoor unit on the wall where the height from the floor is more than 2300mm.

Fixing Installation Plate

The wall you select should be strong and solid enough to prevent vibration.

1 Before installation, confirm the position of a screw between chassis and installation plate.

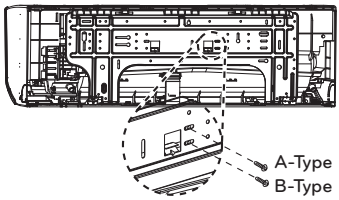

2 Mount the installation plate on the wall with type "A" screws. If mounting the unit on a concrete wall, use anchor bolts.
- Mount the installation plate horizontally by aligning the centerline using Horizontal meter .

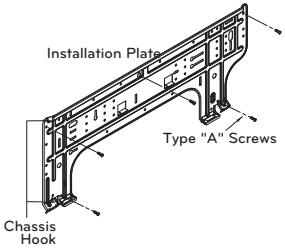

3 Measure the wall and mark the centerline. It is also important to use caution concerning the location of the installation plate. Routing of the wiring to power outlets is through the walls typically. Drilling the hole through the wall for piping connections must be done safely.

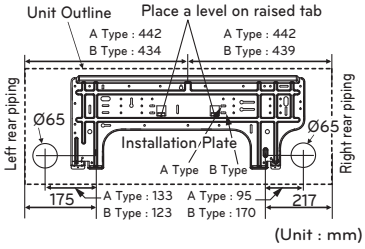

Drill a Hole in the Wall

- Drill the piping hole with a ø65mm hole core drill. Drill the piping hole at either the right or the left with the hole slightly slanted to the outdoor side.

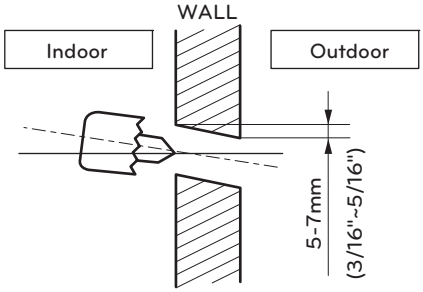

Flaring Work

Main cause for gas leakage is due to defect of flaring work. Carry out correct flaring work in the following procedure.

Cut the pipes and the cable

1 Use the piping kit accessory or the pipes purchased locally.
2 Measure the distance between the indoor and the outdoor unit.
3 Cut the pipes a little longer than measured distance.
4 Cut the cable 1.5m longer than the pipe length.

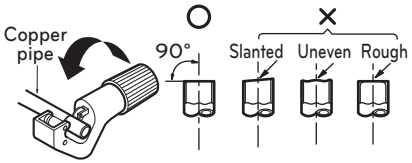

Burrs removal

1 Completely remove all burrs from the cut cross section of pipe/tube.
2 While removing burrs put the end of the copper tube/pipe in a downward direction while removing burrs location is also changed in order to avoid dropping burrs into the tubing.

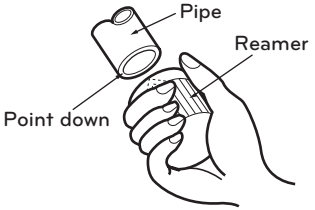

Putting nut on

- Remove flare nuts attached to indoor and outdoor unit, then put them on pipe/tube having completed burr removal.
(not possible to put them on after finishing flare work)

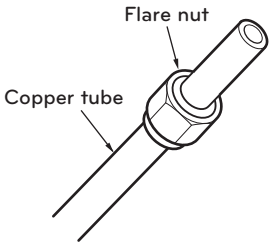

Flaring work

1 Firmly hold copper pipe in a bar with the dimension shown in below table table below.
2 Carry out flaring work with the flaring tool.

Outside diameter		A	Thickness
mm	inch	mm	mm
Ø6.35	1/4"	1.1~1.3	0.7
Ø9.52	3/8"	1.5~1.7	0.8
Ø12.7	1/2"	1.6~1.8	0.8
Ø15.88	5/8"	1.6~1.8	1.0
Ø19.05	3/4"	1.9~2.1	1.0

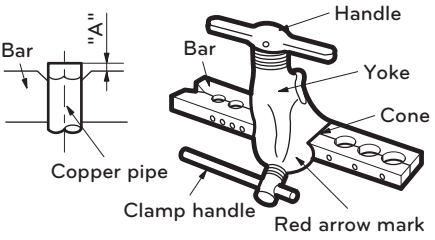

Check

1 Compare the flared work with the figure by.

2 If a flared section is defective, cut it off and do flaring work again.

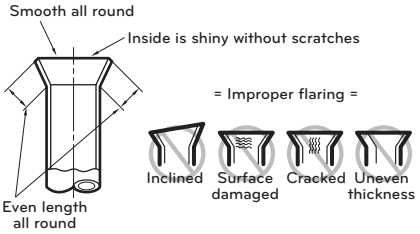

Connecting the Piping

1 Pull the screw cap at the bottom of the indoor unit

2 Remove the chassis cover from the unit by loosing 2 screws

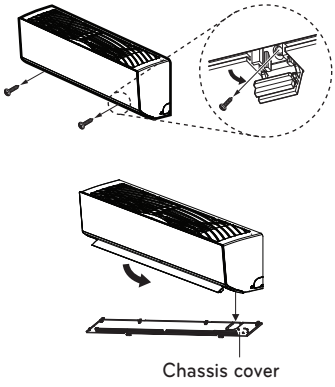

3 Pull back the tubing holder.

4 Remove pipe port cover and positioning the tubing

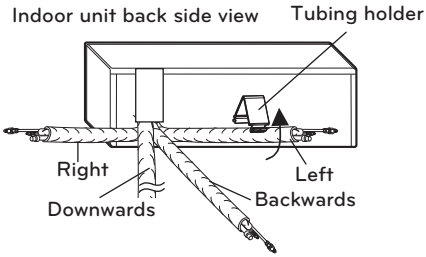

* The feature can be changed according a type of model.

Good case

- Press on the tubing cover and unfold the tubing to downward slowly. And then bend to the left side slowly.

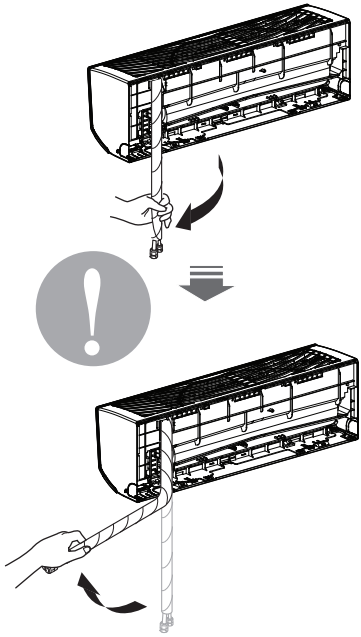

Bad case

- Following bending case from right to left directly may cause damage to the tubing.

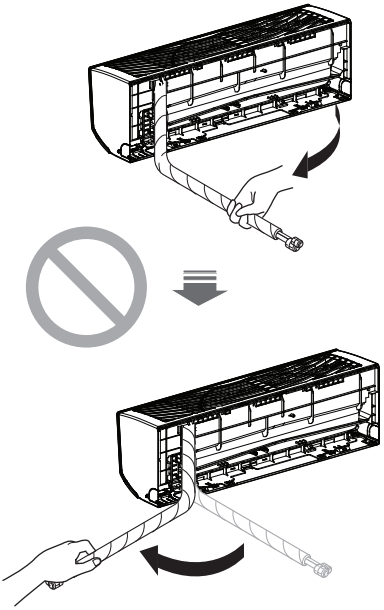

* The feature can be changed according a type of model.

> ⚠ CAUTION
>
> Installation Information. For right piping. Follow the instruction above.

Installation of Indoor Unit

1 Hook the indoor unit onto the upper portion of the installation plate.(engage the three hooks at the top of the indoor unit with the upper edge of the installation plate) Ensure that the hooks are properly seated on the installation plate by moving it left and right

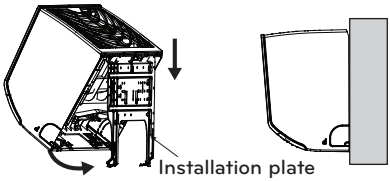

2 Unlock the tubing holder from the chassis and mount between the chassis and installation plate in order to separate the bottom side of the indoor unit from the wall.

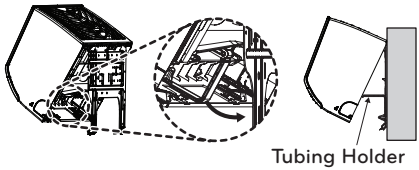

* The feature can be changed according a type of model.

Piping

1 Insert the connecting cable through the bottom side of indoor unit and connect the cable (You can see detail contents in 'Connecting the cables' section)

<Left side piping>

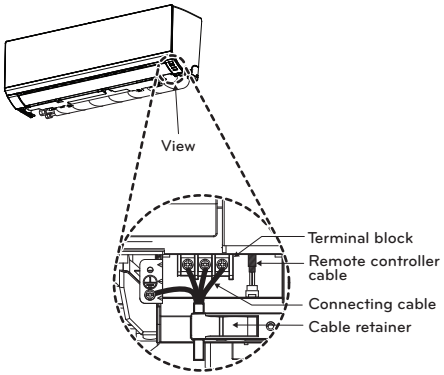

<Right side piping>

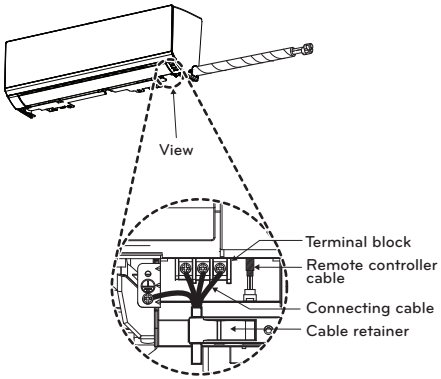

2 Secure the cable onto the control board with the cable retainer.

3 Tape the tubing pipe, drain hose and the connection cable. Be sure that the drain hose is located at the lowest side of the bundle. Locating at the upper side can cause overflow from the drain pan through the inside of the unit.

<Left side piping>

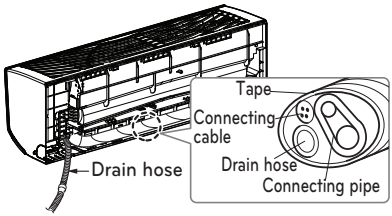

<Right side piping>

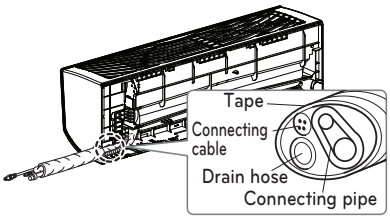

* The feature can be changed according a type of model.

Connecting the installation pipe and drain hose to the indoor unit.

1 Align the center of the pipes and sufficiently tighten the flare nut by hand

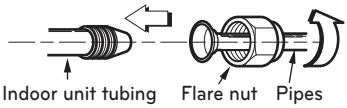

2 Tighten the flare nut with a wrench

Outside diameter		Torque
mm	inch	kgf.m
Ø6.35	1/4	1.8~2.5
Ø9.52	3/8	3.4~4.2
Ø12.7	1/2	5.5~6.5
Ø15.88	5/8	6.3~8.2
Ø19.05	3/4	9.9~12.1

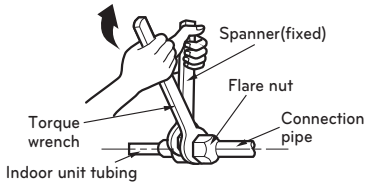

3 When needed to extend the drain hose of indoor unit, assembly the drain pipe as shown on the drawing

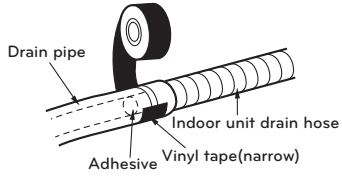

Wrap the insulation material around the connecting portion.

1 Overlap the connection pipe insulation material and the indoor unit pipe insulation material. Bind them together with vinyl tape so that there may be no gap.

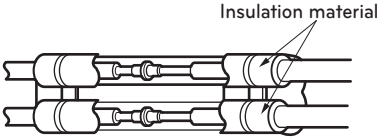

2 Set the tubing cutting line upward.
Wrap the area which accommodates the rear piping housing section with vinyl tape.

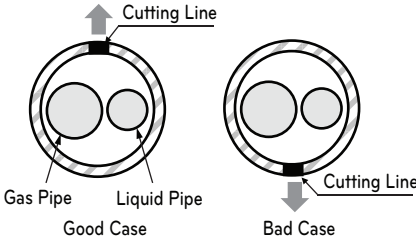

* Tubing cutting line have to be upward.

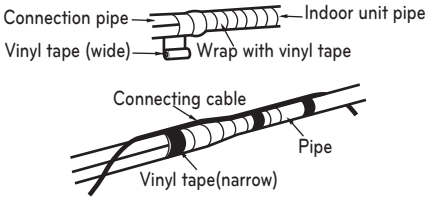

3 Bundle the piping and drain hose together by wrapping them with vinyl tape sufficient enough to cover where they fit into the rear piping housing section.

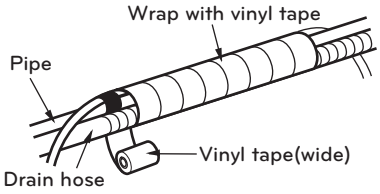

Finishing the indoor unit installation

1 Mount the tubing holder in the original positon.

2 Ensure that the hooks are properly seated on the installation plate by moving it left and right.

3 Press the lower left and right sides of the unit against the installation plate until the hooks engage into their slots (clicking sound).

4 Finish the assembly by screwing the unit to the installation plate by using two pieces of type "C" screws. And assemble a chassis cover.

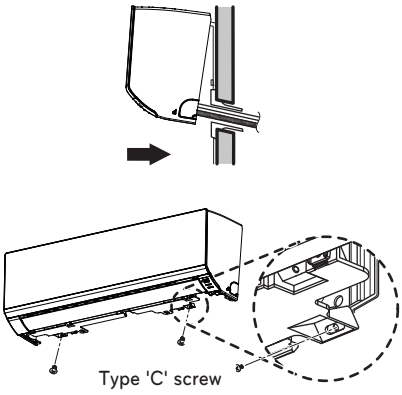

* The feature can be changed according to type of model

Checking the Drainage

To check the drainage.

1 Pour a glass of water on the evaporator.

2 Ensure the water flows through the drain hose of the indoor unit without any leakage and goes out the drain exit.

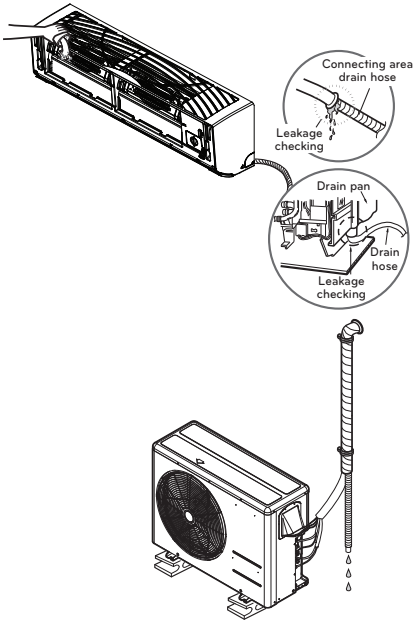

Drain piping

1 The drain hose should point downward for easy drain flow.

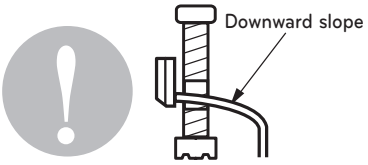

2 Do not make drain piping like the following.

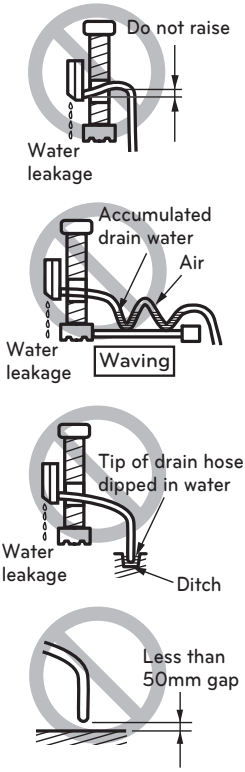

* The feature can be changed according a type of model.

Installation of filters

1 Pull out the [Allergy free filter + Triple Filter] from the separately packed plastic bag.
2 Detach the two nitto tapes from the filter.
3 Insert the filter into the filter case.
4 Detach two nitto tapes from the plasma filter.

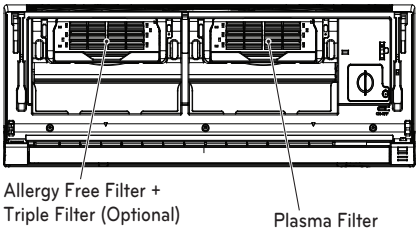

* The feature can be changed according a type of model.

Test Running

- Check that all tubing and wiring are properly connected.
- Check that the gas and liquid side service valves are fully open.

Prepare remote controller

1 Remove the battery cover by pulling it according to the arrow direction.
2 Insert new batteries making sure that the (+) and (–) of battery are installed correctly.
3 Reattach the cover by pushing it back into position.

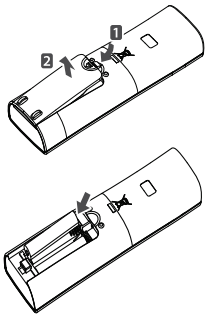

NOTE

- Use 2 AAA(1.5volt) batteries. Do not use rechargeable batteries.
- Remove the batteries from the remote controller if the system is not used for a long time


LG
Life's Good