LG
Life's Good

ENGLISH

TÜRKÇE

INSTALLATION MANUAL

AIR CONDITIONER

- Please read this installation manual completely before installing the product.
- Installation work must be performed in accordance with the national wiring standards by authorized personnel only.
- Please retain this installation manual for future reference after reading it thoroughly.

TYPE : Air-to-Water Heat Pump (For High Temperature)

P/NO : MFL69166505

www.lg.com

TABLE OF CONTENTS

1. SAFETY PRECAUTIONS....3
2. INSTALLATION PARTS....6
3. GENERAL INFORMATION....7
4. INSTALLATION....8
TRANSPORTING THE UNIT....8
SELECTION OF THE BEST LOCATION....9
INSTALLATION SPACE....10
COLLECTIVE / CONTINUOUS INSTALLATION FOR ROOF TOP USE....14
FOUNDATION FOR INSTALLATION....15
WATER PIPING AND WATER CIRCUIT CONNECTION....16
SANITARY WATER TANK AND SANITARY WATER TANK KIT....20
INSTALLATION SCENES....21
REFRIGERANT PIPING....23
FLARE SHAPE AND FLARE NUT TIGHTENING TORQUE....24
OPENING SHUTOFF VALVE....24
CLOSING SHUTOFF VALVE....24
CONNECTING THE PIPES TO THE OUTDOOR UNIT....25
CAUTIONS FOR HANDLING SERVICE VALVE....26
SELECTION OF REFRIGERANT PIPING....27
THE AMOUNT OF REFRIGERANT....27
LEAK TEST AND VACUUM DRYING....28
HOW TO CONNECT WIRINGS....31
CONNECTION METHOD OF THE CONNECTING CABLE (EXAMPLE)....32
CONNECTING CABLES....36
COMMUNICATION AND POWER CABLE....37
WIRING OF MAIN POWER SUPPLY AND EQUIPMENT CAPACITY....38
5. ACCESSORIES INSTALLATION....39
LOCATION OF ACCESSORIES AND EXTERNAL PARTS CONNECTION....39
MAIN PUMP CONNECTION....42
WATER TANK TEMPERATURE SENSOR CONNECTION....42
THERMOSTAT....43
REMOTE TEMPERATURE SENSOR....46
3WAY VALVE....47
DRY CONTACT....49
6. SYSTEM SET-UP....50
DIP SWITCH SETTING....50
INSTALLER SETTING....57
7. TEST RUN....65
CHECKS BEFORE TEST RUN....66
TEST RUN PROCEDURE....66
CAUTION BEFORE OPERATION TEST....67
OPERATION TEST OF WATER PIPE....67
TROUBLESHOOTING....68

ENGLISH

1. Safety Precautions

To prevent injury to the user or other people and property damage, the following instructions must be followed.

■ Be sure to read before installing the unit.
■ Be sure to observe the cautions specified here as they include important items related to safety.
■ Incorrect operation due to ignoring instruction will cause harm or damage. The seriousness is classified by the following indications.

⚠WARNING	This symbol indicates the possibility of death or serious injury.
⚠CAUTION	This symbol indicates the possibility of injury or damage to properties only.

■ Meanings of symbols used in this manual are as shown below.

⃠	**Be sure not to do.**
❗	**Be sure to follow the instruction.**

⚠WARNING

■ Installation

Do not use a defective or underrated circuit breaker. Use this appliance on a dedicated circuit.

- There is risk of fire or electric shock.

For electrical work, contact the dealer, seller, a qualified electrician, or an Authorized Service Center.

- There is risk of fire or electric shock.

Always ground the unit.

- There is risk of fire or electric shock.

Install the panel and the cover of control box securely.

- There is risk of fire or electric shock.

Always install a dedicated circuit and breaker.

- Improper wiring or installation may cause fire or electric shock.

Use the correctly rated breaker or fuse.

- There is risk of fire or electric.

Do not modify or extend the power cable.

- There is risk of fire or electric shock.

Do not install, remove, or reinstall the unit by yourself (customer).

- There is risk of fire, electric shock, explosion, or injury.

For antifreeze, always contact the dealer or an authorized service center.

- Almost the antifreeze is a toxic product.

The refrigerant of this unit is R134a and the unit is connected to the outdoor unit where R410A refrigerant is used.

- The installation tool such as manifold gauge should comply with R410A.

For installation, always contact the dealer or an Authorized Service Center.

- There is risk of fire, electric shock, explosion, or injury.

Do not install the unit on a defective installation stand.

- It may cause injury, accident, or damage to the unit.

Be sure the installation area does not deteriorate with age.

- If the base collapses, the unit could fall with it, causing property damage, unit failure, and personal injury.

Do not install the water pipe system as Open loop type.

- It may cause failure of unit.

Do not install the Indoor Unit outside.

- It may cause damage to the unit.

Use a vacuum pump or inert (nitrogen) gas when doing leakage test or purging air. Do not compress air or oxygen and do not use flammable gases.

- There is the risk of death, injury, fire or explosion.

■ Operation

Take care to ensure that power cable could not be pulled out or damaged during operation.

- There is risk of fire or electric shock.

Do not place anything on the power cable.

- There is risk of fire or electric shock.

Do not plug or unplug the power supply plug during operation.

- There is risk of fire or electric shock.

Do not touch (operate) the unit with wet hands.

- There is risk of fire or electric shock.

Do not place a heater or other appliances near the power cable.

- There is risk of fire or electric shock.

Do not allow water to run into electric parts.

- There is risk of fire, failure of the unit, or electric shock.

Do not store or use flammable gas or combustibles near the unit.

- There is risk of fire or failure of unit.

Do not use the unit in a tightly closed space for a long time.

- It may cause damage to the unit.

When flammable gas leaks, turn off the gas and open a window for ventilation before turning the unit on.

- There is risk of explosion or fire.

If strange sounds, or small or smoke comes from unit, turn the breaker off or disconnect the power supply cable.

- There is risk of electric shock or fire.

Stop operation and close the window in storm or hurricane. If possible, remove the unit from the window before the hurricane arrives.

- There is risk of property damage, failure of unit, or electric shock.

Do not open the front cover of the unit while operation. (Do not touch the electrostatic filter, if the unit is so equipped.)

- There is risk of physical injury, electric shock, or unit failure.

When the unit is soaked (flooded or submerged), contact an Authorized Service Center.

- There is risk of fire or electric shock.

Be cautious that water could not be poured to the unit directly.

- There is risk of fire, electric shock, or unit damage.

Ventilate the unit from time to time when operating it together with a stove, etc.

- There is risk of fire or electric shock.

Turn the main power off when cleaning or maintaining the unit.

- There is risk of electric shock.

Take care to ensure that nobody could step on or fall onto the unit.

- This could result in personal injury and unit damage.

For installation, always contact the dealer or an Authorized Service Center.

- There is risk of fire, electric shock, explosion, or injury.

If the unit is not used for long time, we strongly recommend not to switch off the power supply to the unit.

- There is risk of water freezing.

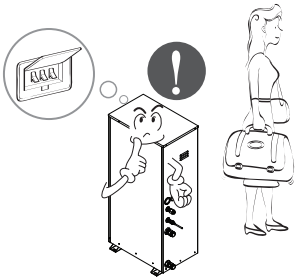

⚠ CAUTION

■ Installation

Always check for gas (refrigerant) leakage after installation or repair of unit.

- Low refrigerant levels may cause failure of unit.

Keep level even when installing the unit.

- To avoid vibration or water leakage.

Use two or more people to lift and transport the unit.

- Avoid personal injury.

■ Operation

Do not use the unit for special purposes, such as preserving foods, works of art, etc.

- There is risk of damage or loss of property.

Use a soft cloth to clean. Do not use harsh detergents, solvents, etc.

- There is risk of fire, electric shock, or damage to the plastic parts of the unit.

Do not step on or put anything on the unit.

- There is risk of personal injury and failure of unit.

Use a firm stool or ladder when cleaning or maintaining the unit.

- Be careful and avoid personal injury.

2. Installation Parts

Before starting installation, please make it sure that all parts are found inside the unit box.

Item	Image	Quantity
Installation Manual	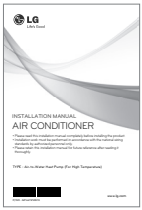	1
Owner's Manual		1
Remote Controller / Cable		1
Sensor Holder	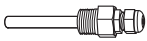	1
Water Tank Temperature Sensor		1
Strainer	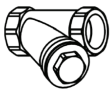	1
Screw		4

3. General Information

ENGLISH

With advanced inverter technology, **Air-to water Heat Pump (For High Temperature)** is suitable for applications like under floor heating, and hot water generation. By Interfacing to various accessories user can customize the range of the application.

Model Information

Model name and related information

Type			Air-to water Heat Pump (For High Temperature)	
Model		Unit	AHNW166T0 (Indoor)	AHUW166T0 (Outdoor)
Power Supply		Ø, V, Hz	1, 220-240, 50	
Capacity	Heating	kW	16	
		kcal/h	13,760	
		Btu/h	54,600	
Net Weight		kg(lbs)	88(194)	98(216)
Refrigerant	Type		R134a	R410A
	Amount	kg(lbs)	2.3(5)	3.5(7.7)
Noise Level		dB	43	53
Maximum Running Current		A	20	19

*1 : Tested under Eurovent Heating condition
(water temperature 55°C(131°F) → 65°C(149°F) at outdoor ambient temperature 7°C(44°F) / 6°C(42°F))

4. Installation

Transporting the Unit

- When carrying the suspended unit, pass the ropes between legs of base panel under the unit.
- Always lift the unit with ropes attached at four points so that impact is not applied to the unit.
- Attach the ropes to the unit at an angle Ⓐ of 40° or less.
- Use only accessories and parts which are of the designated specification when installing.

1) Indoor Unit

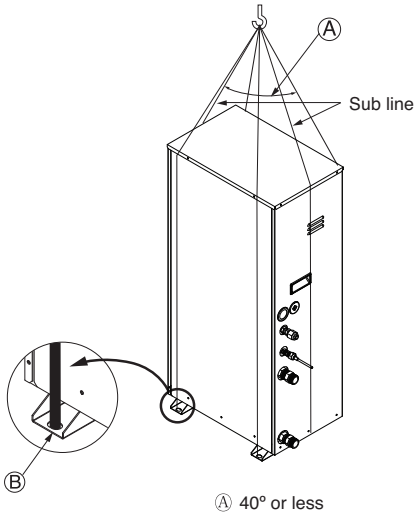

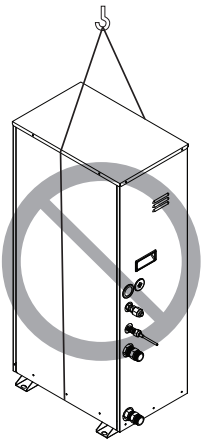

Ⓐ 40° or less
Ⓑ Line supporter

2) Outdoor Unit

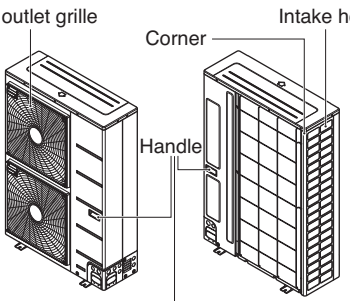

Always hold the unit by the corners, as holding it by the side intake holes on the casing may cause them to deform.

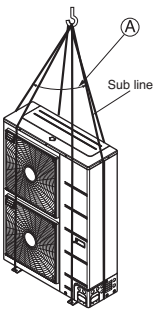

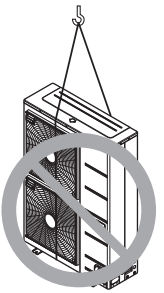

Ⓐ 40° or less

CAUTION

Be very careful while carrying the unit.

- Do not have only one person carry the unit if it is more than 20 kg (44.1 lbs).
- PP bands are used to pack some products. Do not use them as a mean for transportation because they are dangerous.
- Tear plastic packaging bag and scrap it so that children cannot play with it. Otherwise plastic packaging bag may suffocate children to death.
- When carrying the unit, be sure to support it at 4-points. Carrying and lifting the unit with 3-point support may make it unstable, resulting in a fall.

Selection of the best location

1) Indoor

1. Select space for installing Indoor Unit, which will meet the following conditions:
   - The place where the unit shall be installed inside.
   - The place shall easily bear a load exceeding four times of the unit weight.
   - The place where the unit shall be leveled.
   - The place shall allow easy water drainage.
   - The place where the unit shall be connected to the outdoor unit.
   - The place where the unit is not affected by an electrical noise.
   - The place where there should not be any heat source or steam near the unit.

2) Outdoor

1. Select space for installing outdoor unit, which will meet the following conditions:
   - No direct thermal radiation from other heat sources
   - No possibility of annoying neighbors by noise from unit
   - No exposition to strong wind
   - With strength which bears weight of unit
   - Note that drain flows out of unit when heating
   - With space for air passage and service work shown next
   - Because of the possibility of fire, do not install unit to the space where generation, inflow, stagnation, and leakage of combustible gas is expected.
   - Avoid unit installation in a place where acidic solution and spray (sulfur) are often used.
   - Do not use unit under any special environment where oil, steam and sulfuric gas exist.
   - It is recommended to fence round the outdoor unit in order to prevent any person or animal from accessing the outdoor unit.
   - If installation site is area of heavy snowfall, then the following directions should be observed.
     - Make the foundation as high as possible.
     - Fit a snow protection hood.
2. Select installation location considering following conditions to avoid bad condition when additionally performing defrost operation.
   - Install the outdoor unit at a place well ventilated and having a lot of sunshine in case of installing the product at a place with a high humidity in winter (near beach, coast, lake, etc).
     (Ex) Rooftop where sunshine always shines.
   - Performance of heating will be reduced and preheat time of the indoor unit may be lengthened in case of installing the outdoor unit in winter at following location:
     - Shade position with a narrow space
     - Location with much moisture in neighboring floor.
     - Location with much humidity around.
     - Location where ventilation is good.
       It is recommended to install the outdoor unit at a place with a lot of sunshine as possible as.
     - Location where water gathers since the floor is not even.

3. When installing the outdoor unit in a place that is constantly exposed to a strong wind like a coast or on a high story of a building, secure a normal fan operation by using a duct or a wind shield.
   - Install the unit so that its discharge port faces to the wall of the building. Keep a distance 500mm or more between the unit and the wall surface.
   - Supposing the wind direction during the operation season of the air conditioner, install the unit so that the discharge port is set at right angle to the wind direction.

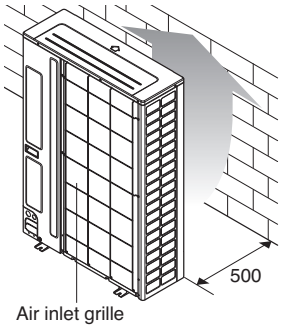

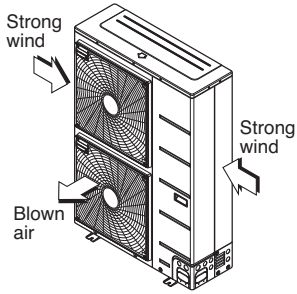

Installation Space

1) Indoor Unit
   - The following values are the least space for installation. If any service area is needed for service according to field circumstance, obtain enough service space.
   - The unit of values is mm.

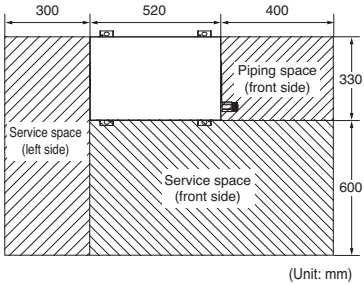

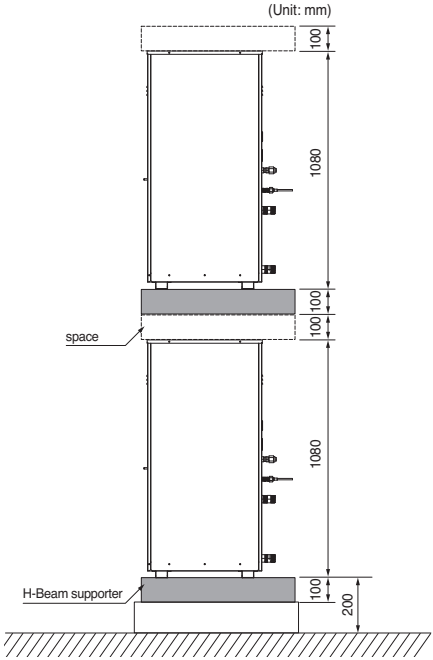

2) Outdoor Unit
- The following values are the least space for installation.
  If any service area is needed for service according to field circumstance, obtain enough service space.
- The unit of values is mm.

■ In case of obstacles on the suction side

1. Stand alone installation

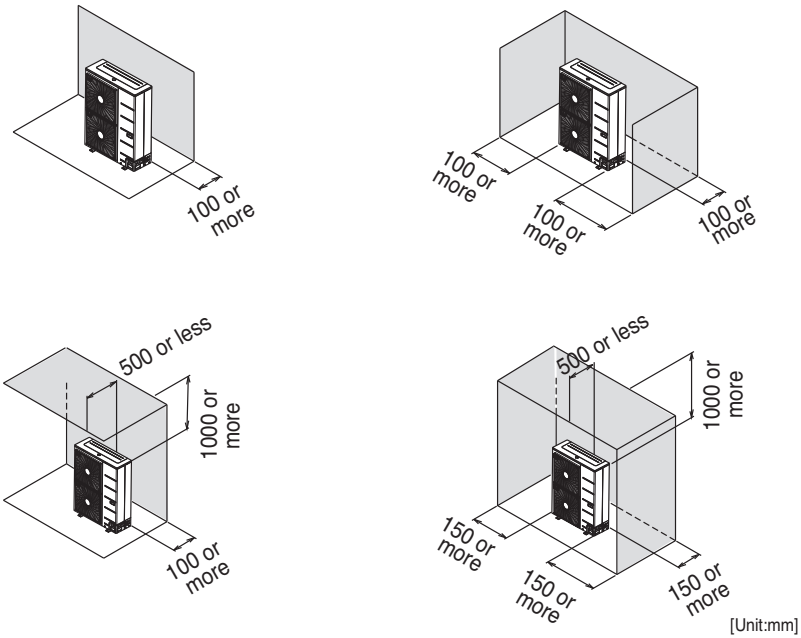

2. Collective installation

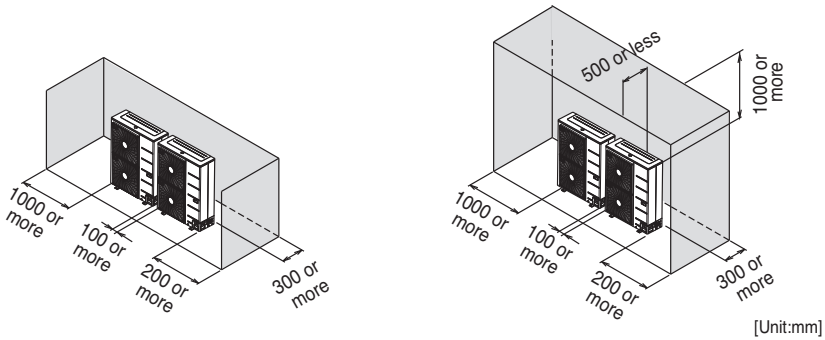

■ In case of obstacles on the discharge side

1. Stand alone installation

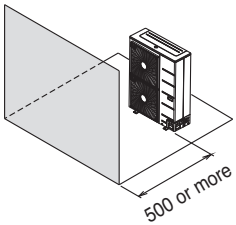

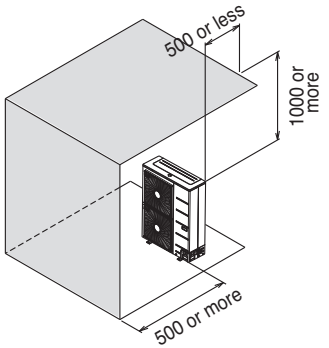

2. Collective installation

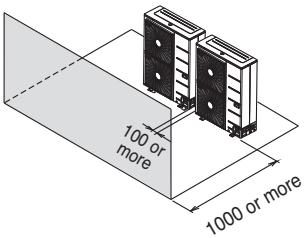

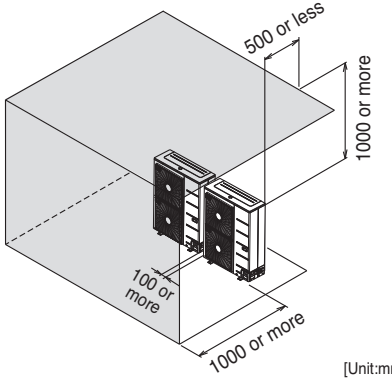

[Unit:mm]

■ In case of obstacles on the suction and the discharge side
➲ Obstacle height of discharge side is higher than the unit

1. Stand alone installation

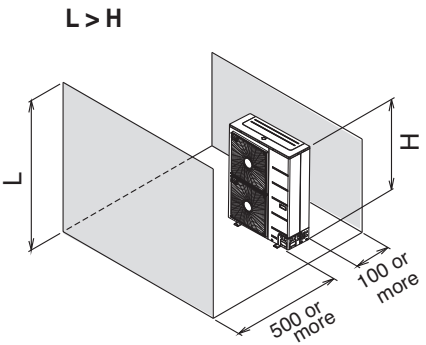

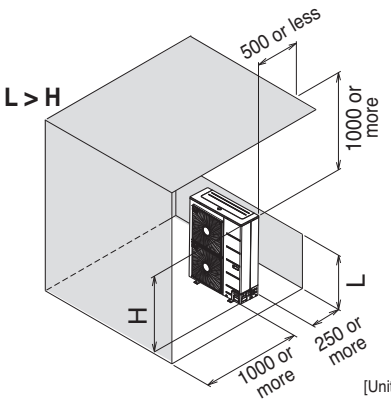

[Unit:mm]

2. Collective installation

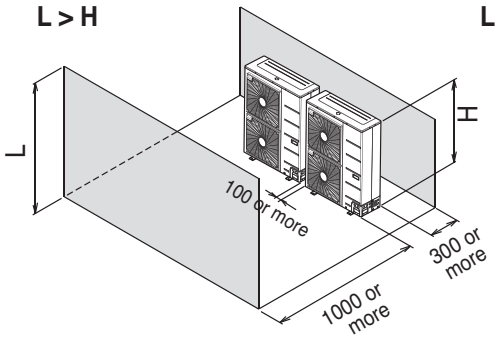

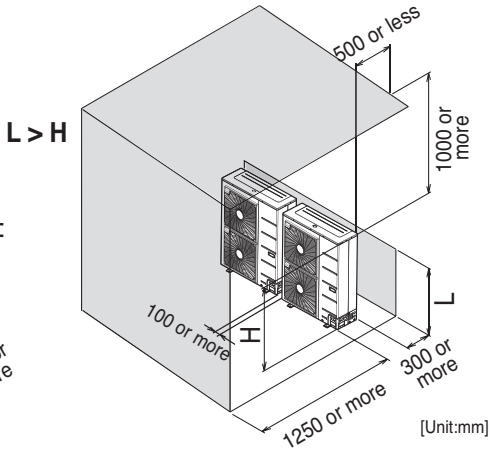

➲ Obstacle height of discharge side is lower than the unit

1. Stand alone installation

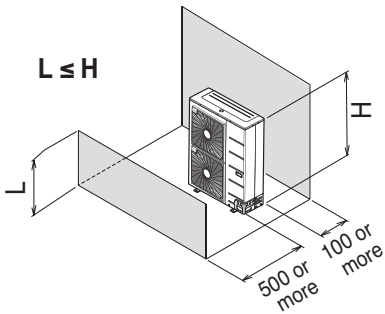

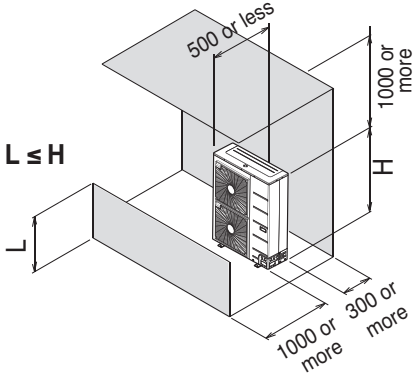

2. Collective installation

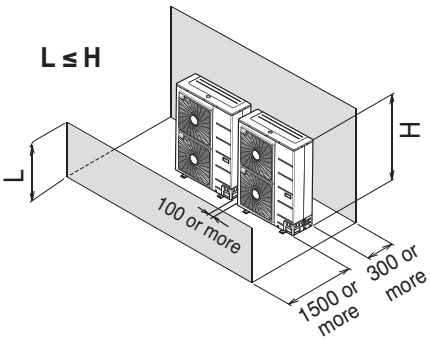

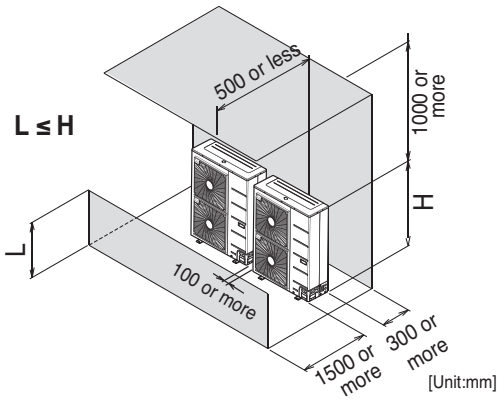

Collective / Continuous Installation for roof top use

Space required for collective installation and continuous installation: When installing several units, leave space between each block as shown below considering passage for air and people.

1. One row of stand alone installation

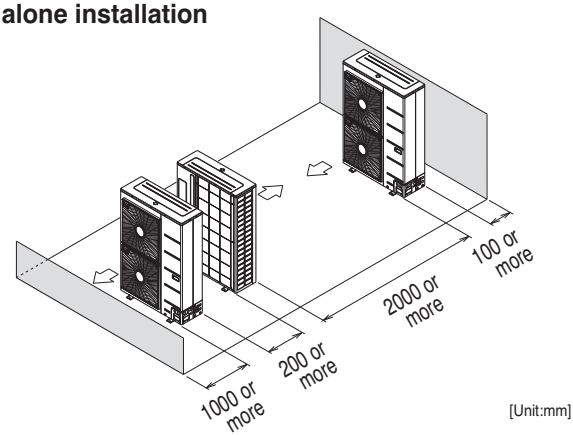

2. Rows of collective installation (2 or more)

• L should be smaller than H

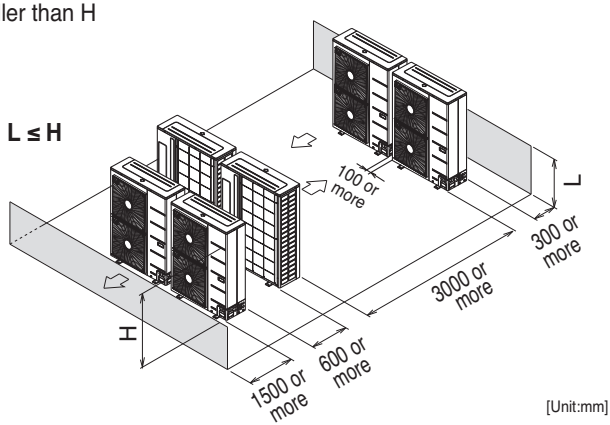

Seasonal wind and cautions in winter

- Sufficient measures are required in a snow area or severe cold area in winter so that product can be operated well.
- Get ready for seasonal wind or snow in winter even in other areas.
- Install a suction and discharge duct not to let in snow or rain.
- Install the outdoor unit not to come in contact with snow directly. If snow piles up and freezes on the air suction hole, the system may malfunction. If it is installed at snowy area, attach the hood to the system.
- Install the outdoor unit at the higher installation console by 50cm than the average snowfall (annual average snowfall) if it is installed at the area with much snowfall.

1. The height of H frame must be more than 2 times the snowfall and its width shall not exceed the width of the product. (If width of the frame is wider than that of the product, snow may accumulate)
2. Don't install the suction hole and discharge hole of the Outdoor Unit facing the seasonal wind.

ENGLISH

Foundation for Installation

1) Indoor Unit

- Fix the unit tightly with bolts as shown below so that the unit will not fall down due to earthquake.
- Noise and vibration may occur from the floor or wall since vibration is transferred through the installation part depending on installation status. Thus, use anti-vibration materials (cushion pad) fully (The base pad shall be more than 200 mm (7-7/8 inch)).

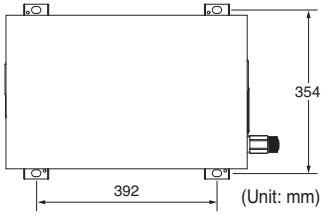

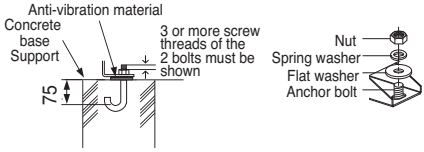

2) Outdoor Unit

- Check the strength and level of the installation ground so that the unit will not cause any operating vibration or noise after installation.
- Fix the unit securely by means of the foundation bolts. (Prepare 4sets of M12 foundation bolts, nuts and washers each which are available on the market.)
- It is best to screw in the foundation bolts until their length are 20mm from the foundation surface.

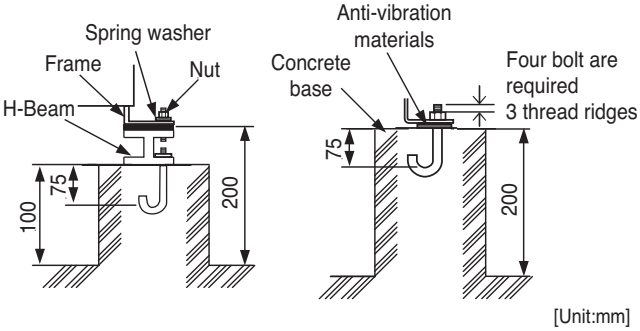

Foundation bolt executing method

Water Piping and Water Circuit Connection

General Considerations

Followings should be considered before beginning water circuit connection.

- Service space should be secured.
- Water pipes and connections should be cleaned using water.
- Space for installing external water pump should be provided.
- Never connect electric power while proceeding water charging.

Water Piping and Water Circuit Connection

While installing water pipes, followings should be considered :

- While inserting or putting water pipes, close the end of the pipe with pipe cap to avoid dust entering.
- When cutting or welding the pipe, always be careful that inner section of the pipe should not be defective. For example, no weldments or no burrs are found inside the pipe.
- Pipe fittings (e.g. L-shape elbow, T-shape tee, diameter reducer, etc) should be tightened strongly to be free from water leakage.
- Connected sections should be leakage-proof treatment by applying tefron tape, rubber bushing, sealant solution, etc.
- Appropriate tools and tooling methods should be applied to prevent mechanical breakage of the connections.
- Operation time of flow valve(e.g. 3way valve) should be less than 90 seconds.
- Pipe is insulated to prevent heat loss to external environment.

Water cycle

*** For the water pipe system, use the closed loop type.**

1. For the parts of the water pipe system, use the parts above the design water pressure.
2. For the water pipe, do not use steel pipe.
3. To replace the connected device easily, install the union joint (2).
4. Install the service port (3) to clean the heat exchanger at each inlet and outlet of the water pipe.
5. Always install a strainer (4) at the inlet of the water pipe.
   - For the strainer, use one with 50 mesh or above with measurement diameter of 0.4mm or less. (Exclude other net)
   - Always install the strainer on the horizontal pipe.
     (When dirt, trash, rusted pieces get into the water pipe system, it can cause problems to the product by corroding the metallic material.)
6. Install the air vent (5) at the top of the water pipe.
7. Install a thermometer (6) and pressure gauge (7) at the inlet and outlet of the water pipe.
8. Install the drain valve (8) that can be used for draining the water inside when replacing the part or providing service.
9. Install the shut-off valve (9) to block the water by closing the valve when replacing the part or cleaning.
10. Apply insulated treatment on the exterior of the water pipe so that water drops do not form.
11. Install excessive pressure safety valve (10) that meets the design water pressure to prevent unit or water pipe damage at the pressure increase inside the water pipe system.

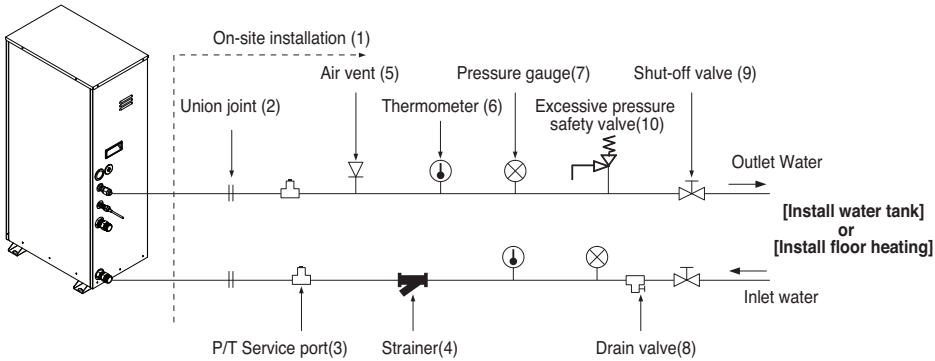

12. There is a drain hole at the bottom of prevent risk of electric shock caused by leakage of water.

*** Water tank & Floor heating installation**

1. Use the pump (1) with sufficient capacity to assure loss of overall water pressure and to supply water to the Indoor Unit.
2. Install the shut-off valve (2) on both sides of the pump to clean and repair the pump.
3. Install the flexible joint (3) to prevent noise and vibration transferred from the pump.
4. Install the pressure gauge (4) to monitor the water pressure from water tank. (Option)
5. Install the expansion tank (5) to accommodate the water contracted or expanded from the temperature difference and to supply the water.
6. After the installation of water pipe system is completed, open the water supply valve (6) and supply the water.
7. When installing the water tank, insert the water tank temperature sensor (7) to measure the temperature of the water inside the tank.
   - For the water tank temperature sensor, use the sensor supplied on the product.
   - When heating the floor, measure the temperature by using the remote controller or remote temperature sensor (Separately sold).
8. Use the water tank (9) with the heat exchange coil (8) installed so that the heat can be exchanged sufficiently inside the tank.

Installation of water tank

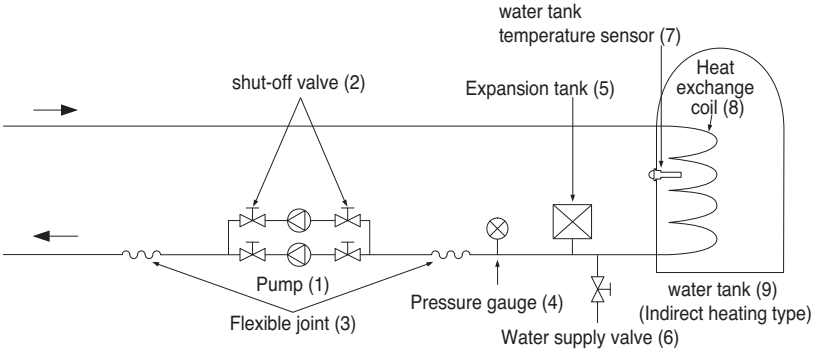

Installation of floor heating

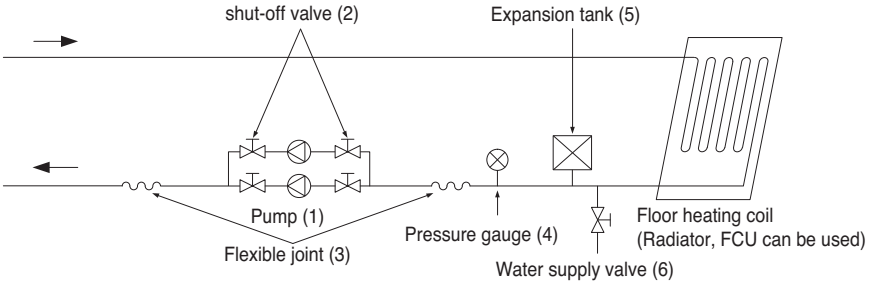

Strainer

- Use the 50 mesh strainer.
  (Exclude scale diameter of 0.4mm or less and other net)
- Check the strainer direction and assemble on the inlet hole (Refer to picture)
- Wrap the Teflon tape on the screw thread of the water pipe for more than 15 times for assembly.
- Install the service port facing downward. (Within left/right 45 degrees)
- Check if there is any leakage on the connecting part.
- Clean the strainer periodically. (Once a year or more frequent)

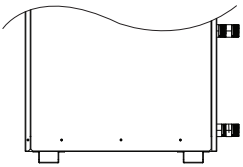

Front

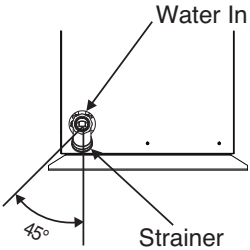

Side

Sanitary Water Tank and Sanitary Water Tank Kit

Installation Condition

Installing sanitary water tank requires following considerations :

- Sanitary water tank should be located at the flat place.
- Water quality should comply with EN 98/83 EC Directives.
- As this water tank is sanitary water tank (indirect heat exchange), do not use anti water-freezing treatment like ethylene grycol.
- It is highly recommend to wash out inside of the sanitary water tank after installation. It ensures generating clean hot water.
- Near the sanitary water tank, there should be water supply and water drain for easy access and maintenance.

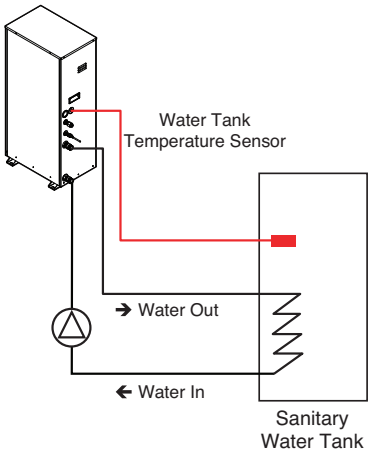

Water tank temperature sensor connection

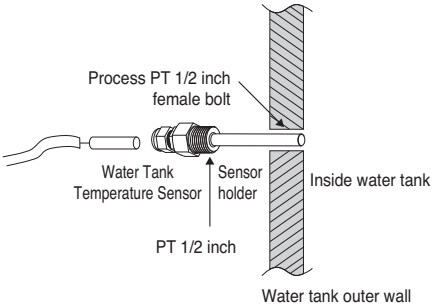

- If hot water mode is used, make sure to install sensor to water tank.
- Make PT15A female bolt hole in the water tank, and install sensor in the water tank.
- Push the sensor into the hole of the sensor holder cap.
- Lock the sensor holder cap.

Installation Scenes

Some installation scenes are presented for example. As these scenes are conceptual figures, installer should optimize the installation scene according to the installation conditions.

1) Floor Heating only

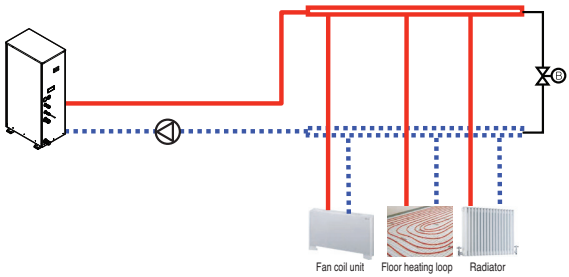

2) Floor Heating + Hot water

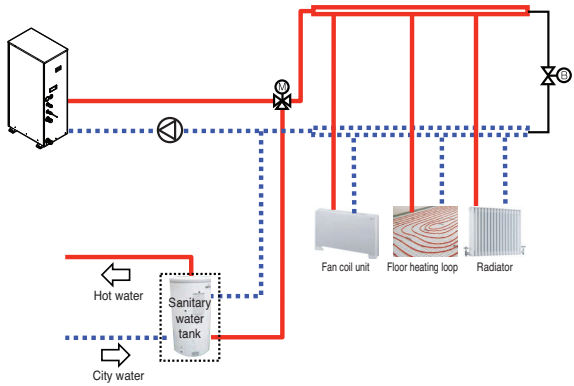

3) Hot water only

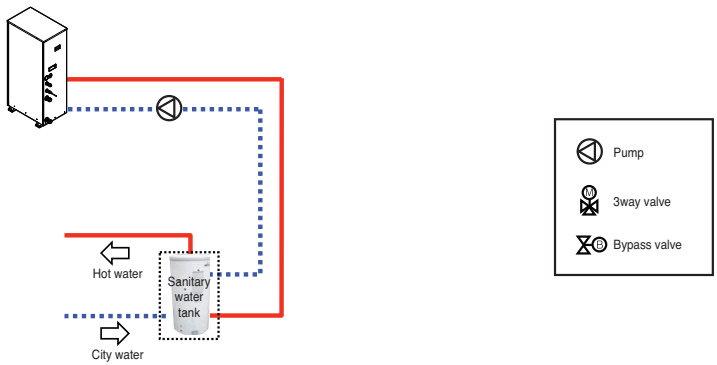

Water Quality

Water quality should comply with EN 98/83 EC Directives. Requirement for resolved chemical ingredients is following table. Detailed water quality condition can be found in EN 98/83 EC Directives.

Parameter	Value	Parameter	Value
Acrylamide	0.10 *µg/l*	Fluoride	1.5 *mg/l*
Antimony	5.0 *µg/l*	Lead	10 *µg/l*
Arsenic	10 *µg/l*	Mercury	1.0 *µg/l*
Benzene	1.0 *µg/l*	Nickel	20 *µg/l*
Benzo(a)pyrene	0.010 *µg/l*	Nitrate	50 *mg/l*
Boron	1.0 *mg/l*	Nitrite	0.50 *mg/l*
Bromate	10 *µg/l*	Pesticides	0.10 *µg/l*
Cadmium	5.0 *µg/l*	Pesticides — Total	0.50 *µg/l*
Chromium	50 *µg/l*	Polycyclic aromatic hydrocarbons	0.10 *µg/l*
Copper	2.0 *mg/l*	Selenium	10 *µg/l*
Cyanide	50 *µg/l*	Tetrachloroethene and Trichloroethene	10 *µg/l*
1.2-dichloroethane	3.0 *µg/l*	Trihalomethanes — Total	100 *µg/l*
Epichlorohydrin	0.10 *µg/l*	Vinyl chloride	0.50 *µg/l*

CAUTION

- If the unit is installed at existing hydraulic water loop, it is important to clean hydraulic pipes to remove sludge and scale.
- Installing sludge strainer in the water loop is very important to prevent performance degrade.
- Chemical treatment to prevent rust should be performed by installer.

Frost protection

In areas of the country where entering water temperatures drop below 0°C(32°F), the water pipe must be protected by using an approved antifreeze solution. Consult your Indoor unit supplier for locally approved solutions in your area. Calculate the approximate volume of water in the system. (Except the Indoor unit.) And add antifreeze solution to the total volume to allow for the water contained in Indoor unit.

Type of Antifreeze	Minimum Temperature for Freeze Protection					
	0°C(32°F)	-5°C(23°F)	-10°C(14°F)	-15°C(5°F)	-20°C(-4°F)	-25°C(-13°F)
Ethylene glycol	0%	12%	20%	30%	-	-
Propylene glycol	0%	17%	25%	33%	-	-
Methanol	0%	6%	12%	16%	24%	30%

CAUTION

1. Use only one of the above antifreeze.
2. If a antifreeze is used, pressure drop and capability degradation of the system can occur.
3. If one of antifreezes is used, corrosion can occur. So please add corrosion inhibitor.
4. Please check the concentration of the antifreeze periodically to keep same concentration.
5. When the antifreeze is used (for installation or operation), take care to ensure that antifreeze must not be touched.
6. Ensure to respect all laws and norms of your country about Anti-freeze usage.

ENGLISH

Refrigerant Piping

Cut the pipes and the cable

- Use the accessory piping kit or the pipes purchased locally.
- Measure the distance between the indoor and the outdoor unit.
- Cut the pipes a little longer than measured distance.
- Cut the cable 1.5m longer than the pipe length.

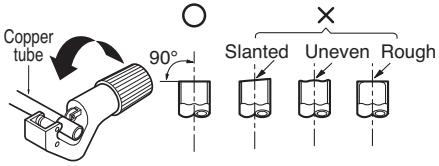

Burrs removal

- Completely remove all burrs from the cut cross section of pipe/tube.
- Put the end of the copper tube/pipe to downward direction as you remove burrs in order to avoid to let burrs drop in the tubing.

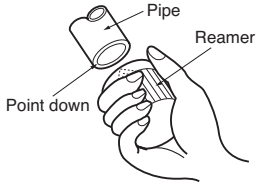

Flaring work

- Carry out flaring work using flaring tool as shown right.

Unit : mm(inch)

Pipe		"A"	
Gas	Liquid	Gas	Liquid
15.88(5/8)	9.52(3/8)	1.6~1.8 (0.63~0.71)	1.5~1.7 (0.59~0.67)

Firmly hold copper tube in a bar(or die) as indicated dimension in the table above.

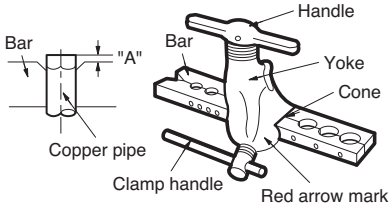

Pipe welding

- Insert and weld the pipe.
- Always make sure to flow Nitrogen at 0.2kgf/cm^2 within the pipe when welding.
- If the welding is done without flowing Nitrogen, it can generate a thick oxidized coating within the pipe to interfere with normal operation of valve and compressor etc.

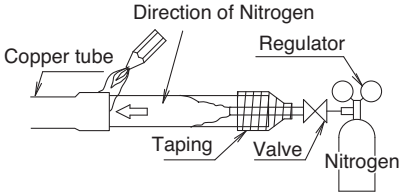

Insulation

- Use rubber foamed insulation material (EPDM, NBR) with high thermal resistance.
- When installed in humid environment, use thicker insulation material than usual.
- Insert the insulation material within the product as deep as possible.

Classification	Thickness
Liquid pipe(Ø9.52)	t9 or above
Gas pipe(Ø22.2)	t19 or above

❊ The thickness of the above insulation material is based on thermal conduction rate of 0.036W/m°C.

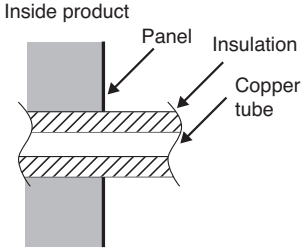

CAUTION

There is no pump-down function because Indoor is the only heating unit. After vacuum drying, recharge the refrigerant.

Flare shape and flare nut tightening torque

Precautions when connecting pipes

- See the following table for flare part machining dimensions.
- When connecting the flare nuts, apply refrigerant oil to the inside and outside of the flares and turn them three or four times at first. (Use ester oil or ether oil.)
- See the following table for tightening torque.(Applying too much torque may cause the flares to crack.)
- After all the piping has been connected, use nitrogen to perform a gas leak check.

pipe size	tightenig torque	A	flare shape
mm	N·m(kgf·cm)	mm	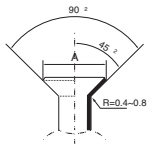
Ø9.52	32.7-39.9(327~399)	12.8-13.2	
Ø12.7	49.5-60.3(495~603)	16.2-16.6	
Ø15.88	61.8-75.4(618~754)	19.3-19.7	

CAUTION

- Always use a charge hose for service port connection.
- After tightening the cap, check that no refrigerant leaks are present.
- When loosening a flare nut, always use two wrenches in combination, When connecting the piping, always use a spanner and torque wrench in combination to tighten the flare nut.
- When connecting a flare nut, coat the flare(inner and outer faces) with oil for R410A(PVE) and hand tighten the nut 3 to 4 turns as the initial tightening.

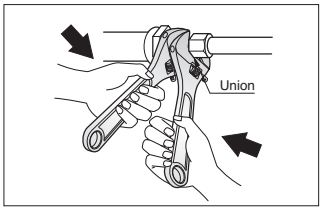

Opening shutoff valve

1. Remove the cap and turn the valve counter clockwise with the hexagon wrench.
2. Turn it until the shaft stops.
   Do not apply excessive force to the shutoff valve. Doing so may break the valve body, as the valve is not a backseat type. Always use the special tool.
3. Make sure to tighten the cap securely.

Closing shutoff valve

1. Remove the cap and turn the valve clockwise with the hexagon wrench.
2. Securely tighten the valve until the shaft contacts the main body seal.
3. Make sure to tighten the cap securely.
   * For the tightening torque, refer to the table on the below.

ENGLISH

Connecting the pipes to the outdoor unit

- Align the center of the piping and sufficiently tighten the flare nut by hand.
- Finally, tighten the flare nut with torque wrench until the wrench clicks.
  - When tightening the flare nut with torque wrench, ensure the direction for tightening follows the arrow on the wrench.

Outside diameter		Torque
mm	inch	N·m
Ø6.35	1/4	16±2
Ø9.52	3/8	38±4
Ø12.7	1/2	55±6
Ø15.88	5/8	75±7

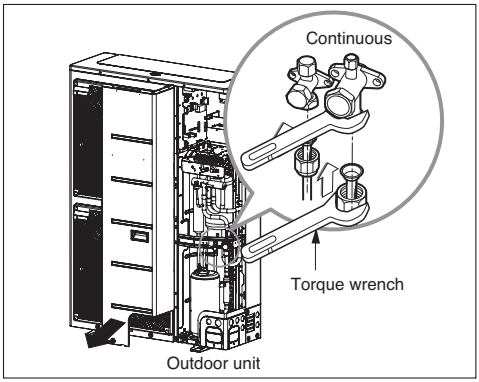

❊ When tighten the pipe, hold the haxagonal body.

■ Possible direction for field piping

- The installation piping is connectable in four directions.(refer to figure 1)
- When connecting in a downward direction, knock out the knockout hole of the base pan. (refer to figure2, figure3)

■ Preventing foreign objects from entering (Figure 4)

- Plug the pipe through-holes with putty or insulation material(procured locally)to stop up all gaps,as shown in the figure 3.
- Insects or small animals entering the outdoor unit may cause a short circuit in the electrical box.

<Figure 1>

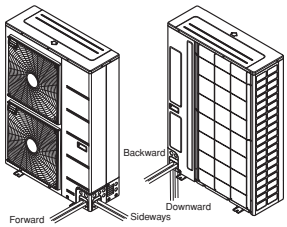

<Figure 2>

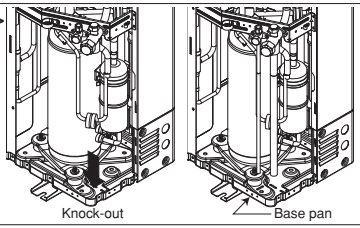

<Figure 4>

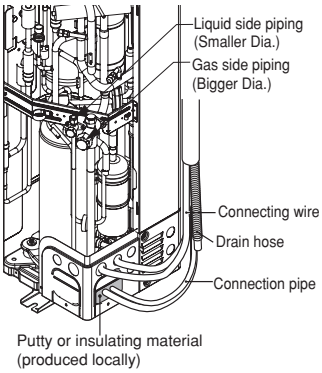

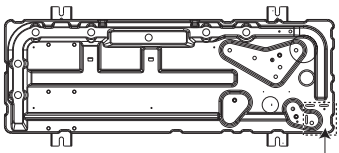

<Figure 3>

Pipe knock out during the ground piping.

CAUTION

- You should not dame pipe/base during the work of pipe knock out.
- Operate piping work removing burr after pipe knock out.

CAUTION

- **Make sure that pipe doesn't contact with the compressor terminal cover and comp bolt.**
- **Always insulate the liquid and gas-side field piping and branch.**

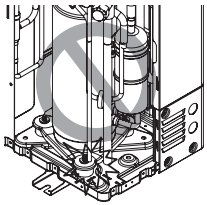

Cautions for Handling Service Valve

- The service valves are closed at shipment from the factory

CAUTION

Make sure to keep the valve open during operation

The names of parts of the service valve are shown in the figure.

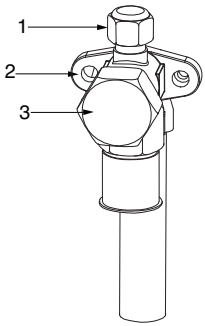

1. Service point
2. Shut-off Valve
3. Valve cover

◆ How to use the Shut-Off valve

Use hexagonal wrenches 4mm or 6mm

- **Opening the valve**
  1. Place the hexagon wrench on the valve bar and turn counter-clockwise.
  2. Stop when the valve bar no longer turns. It is now open.
- **Closing the valve**
  1. Place the hexagon wrench on the valve bar and turn clockwise.
  2. Stop when the valve bar no longer turns. It is now closed.

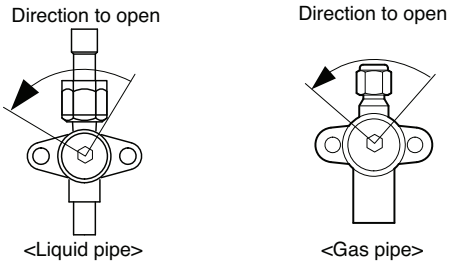

ENGLISH

Selection of Refrigerant Piping

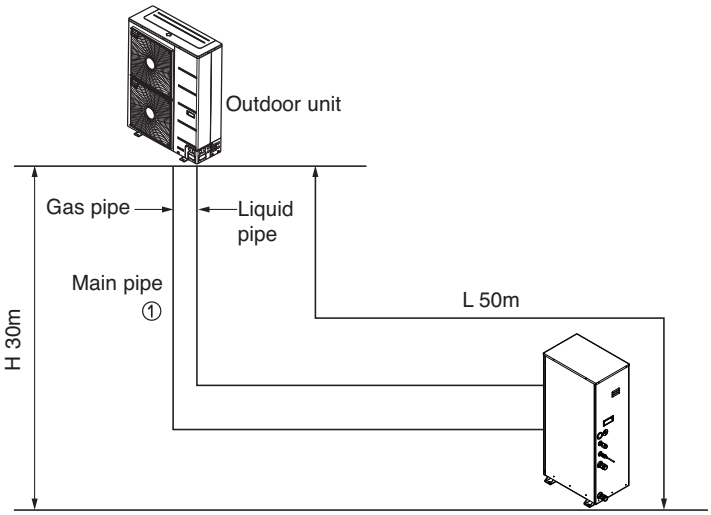

Piping parts	Name	Selection of pipe size
Indoor	Main pipe	Size of main pipe Outdoor unit capacity[kW(Btu/h)] / Liquid pipe [mm(inch)] / Gas pipe [mm(inch)] 16.0(54,600) / Ø9.52(3/8) / Ø15.88(5/8)

The Amount of Refrigerant

The calculation of the additional charge should take into account the length of pipe.

Product charge(kg)

Additional charge(kg) = Length(m) of liquid pipe of Ø9.52mm x 0.060(kg/m)

❊ Chargeless-pipe Length = 10m

Leak Test and Vacuum Drying

1. Leak test

Leak test should be made by pressurizing nitrogen gas to 3.8 MPa(38.7kgf/cm^2). If the pressure does not drop for 24 hours, the system passes the test. If the pressure drops, check where the nitrogen leaks. For the test method, refer to the following figure. (Make a test with the service valves closed. Be also sure to pressurize liquid pipe, gas pipe and high/low pressure common pipe)
The test result can be judged good if the pressure has not be reduced after leaving for about one day after completion of nitrogen gas pressurization.
During this test, set DIP switch as Vacuum Mode.

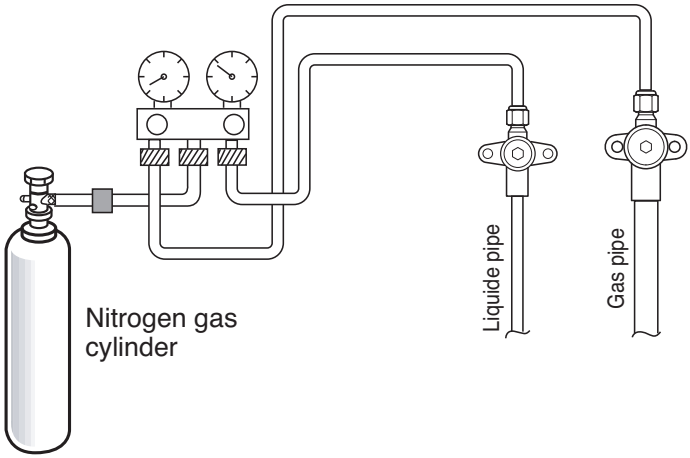

Note:

If the ambient temperature differs between the time when pressure is applied and when the pressure drop is checked, apply the following correction factor

There is a pressure change of approximately 0.1 kg/cm^2 (0.01 MPa) for each 1°C of temperature difference.

Correction= (Temp. at the time of pressurization – Temp. at the time of check) X 0.1
For example: Temperature at the time of pressurization (3.8 MPa) is 27 °C
24 hour later: 3.73 MPa, 20°C
In this case the pressure drop of 0.07 is because of temperature drop
And hence there is no leakage in pipe occurred.

CAUTION

To prevent the nitrogen from entering the refrigeration system in the liquid state, the top of the cylinder must be at higher position than the bottom when you pressurize the system. Usually the cylinder is used in a vertical standing position.

2. Vacuum

Vacuum drying should be made from the service port provided on the outdoor unit's service valve to the vacuum pump commonly used for liquid pipe, gas pipe. Vaccum of the pipe and the indoor units should be made from the port of the outdoor unit's service valve with the service valve closed.

* Never perform air purging using refrigerant.

• Vacuum drying: Use a vacuum pump that can evacuate to -100.7kPa (5 Torr, -755mmHg).

1) Evacuate the system from the liquid and gas pipes with a vacuum pump for over 2 hrs and bring the system to -100.7kPa. After maintaining system under that condition for over 1 hr, confirm the vacuum gauge rises. The system may contain moisture or leak.
2) Following should be executed if there is a possibility of moisture remaining inside the pipe. (Rainwater may enter the pipe during work in the rainy season or over a long period of time) After evacuating the system for 2 hrs, give pressure to the system to 0.05MPa(vacuum break) with nitrogen gas and then evacuate it again with the vacuum pump for 1hr to -100.7kPa(vacuum drying). If the system cannot be evacuated to -100.7kPa within 2 hrs, repeat the steps of vacuum break and its drying. Finally, check if the vacuum gauge does not rise or not, after maintaining the system in vacuum for 1 hr.

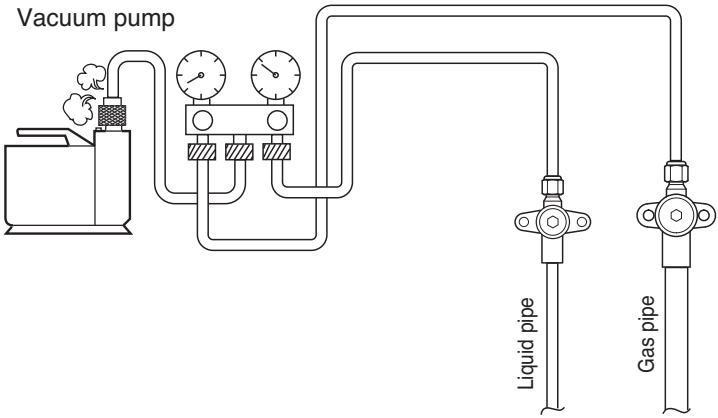

WARNING

- If the primary charging is not performed after vacuum, wet air may go into the outdoor unit. If air is mixed with the refrigerant, the refrigerant cycle may malfunction and the unit may be damaged.
- Charging of refrigerant while the compressor is working is prohibited. Otherwise, liquid may go into the compressor. It may cause faults of the compressor.
- Use a gravimeter accurate to 0.1kg.
- If other refrigerants are mixed in the original refrigerant, a refrigerant cycle may cause malfunction or damage.
- Add accurate refrigerant quantity via calculation.
  Too much or too little refrigerant may cause problems
- Repeated on and off of the indoor units without charging refrigerant may cause faults of EEV.
- Since R410A is a mixed refrigerant, the required additional refrigerant must be charged in its liquid state. If the refrigerant is charged in its gaseous state, its composition changes and the system will not work properly.

3. Refrigerant charging

Follow following procedure to charge the refrigerant.

1. Open all service valves
2. Run the unit with cooling mode
3. Charging the refrigerant to gas service valve during operation.

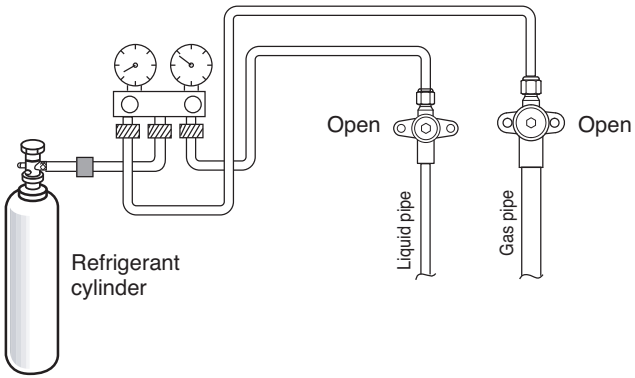

CAUTION

Never charge the refrigerant with service valves closed and unit stopped.
If charging is carried out with service valves closed and unit stopped, the compressor will be damaged. When unit starts to run, and the unit will display ch26 error.
If trying to keep running under this condition, compressor will be broken.

How to connect wirings

1) Indoor

Remove the box cover of electric parts and connect the wiring

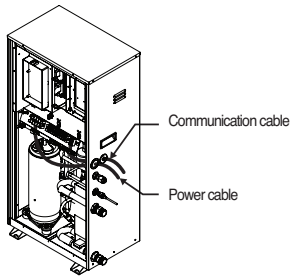

CAUTION

When connecting the power and communication cable, always use the terminal connector (O-ring, Y-ring).

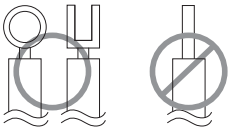

Make sure to tighten so that the screw of the terminal does not get loose.

Wiring Connection

Connect the wires to the terminals on the control board individually according to the outdoor unit connection.
*Ensure that the wire color of the outdoor unit and terminal No. are same as those of the indoor unit respectively.

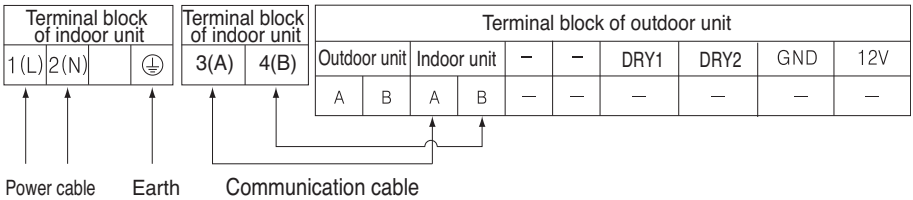

WARNING : Make sure that the screws of the terminal are free from looseness.

CAUTION

After checking the above status, prepare for the following wiring :

1) Use individual power for the unit and refer to the circuit diagram posted on the inside of the control cover.
2) Make sure to install 40A capacity circuit breaker when power is connected to the unit.
3) The bolts used for cable connection may become loose by the vibration generated during the transportation. Make sure to check again and fasten them tightly. (If they are loose, it may cause fire.)
4) Make sure to check power specification.
5) Electrical capacity shall be sufficient.
6) The initial voltage shall be maintained at 90% of the rated voltage on the name plate.
7) The thickness of the power cable complies with the designated specification. (length and thickness of the power cable)
8) Do not install the circuit breaker in the place where there is a lot of moisture or where it is wet.
9) The following problems may be the cause of voltage drop.
- Magnetic switch vibration, defective contact, fuse damage, malfunction of overload protection device
❊ Based on the owner's manual, teach how to operate and use the unit to the user. (temperature setting, etc.)

Connection method of the connecting cable (Example)

1. Make a hole appropriate for the passage of connection cable through on cap by tool.
2. After knocking out the holes, we recommend you paint the edges and areas around the edges using the repair paint to prevent rusting
3. Pass the connecting cable through the hole.
4. Properly connect the cable on the terminal block.
5. Fix the connection cable with the cord clamp providing on the unit not to have strain at the terminal.

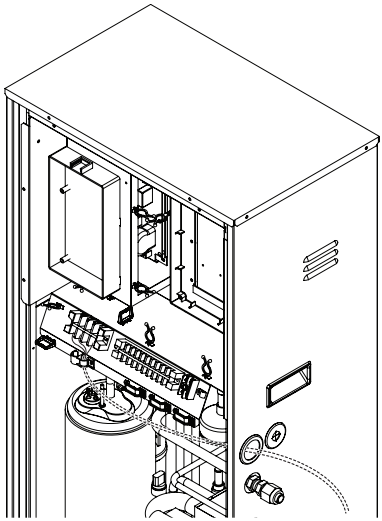

WARNING

- Loose wiring may cause the terminal to overheat or result in unit malfunction.
- A fire hazard may also exist.
- Therefore, be sure all wiring is tightly connected.

2) Outoor

1. Caution

1) Follow ordinance of your governmental organization for technical standard related to electrical equipment, wiring regulations and guidance of each electric power company.

WARNING

Be sure to have authorized electrical engineers do the electric work using special circuits in accordance with regulations and this installation manual. If power supply circuit has a lack of capacity or electric work deficiency, it may cause an electric shock or fire.

2) Install the Outdoor Unit communication line away from the power source wiring so that it is not affected by electric noise from the power source. (Do not run it through the same conduit.)
3) Be sure to provide designated grounding work to Outdoor Unit.

CAUTION

Be sure to connect the Outdoor Unit to earth. Do not connect earth line to any gas pipe, water pipe, lightening rod or telephone earth line. If earth is incomplete, it may cause an electric shock.

4) Give some allowance to wiring for electrical part box of Indoor and Outdoor Units, because the box is sometimes removed at the time of service work.
5) Never connect the main power source to terminal block of communication line. If connected, electrical parts will be burnt out.
6) Use 2-core shield cable for communication line.(O mark in the figure below) If communication lines of different systems are wired with the same multiplecore cable, the resultant poor transmitting and receiving will cause erroneous operations. (⃠ mark in the figure below)
7) Only the communication line specified should be connected to the terminal block for Outdoor Unit communication.

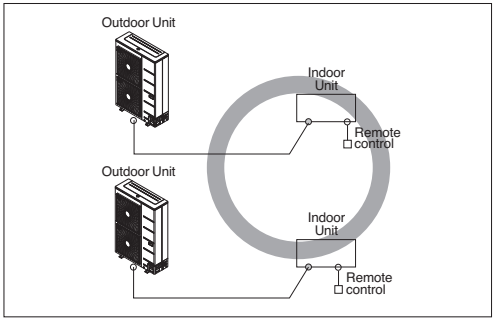

2-Core Shield Cable

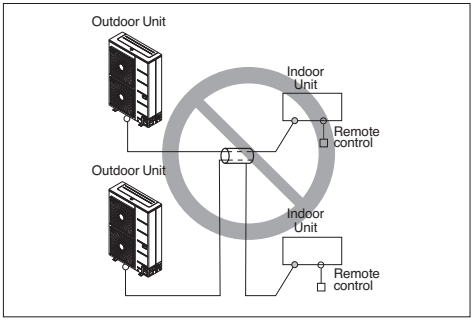

Multi-Core Cable

CAUTION

- **This product have reversed phase protection detector that only works when the power is turned on. If there exists black out or the power goes on and off which the product is operating, attach a reversed phase protection circuit locally. running the product in reversed phase may break the compressor and other parts.**
- **Use the 2-core shield cables for communication lines. Never use them together with power lines.**
- **The conductive shielding layer of cable should be grounded to the metal part of both units.**
- **Never use multi-core cable**
- **As this unit is equipped with an inverter, to install a phase leading capacitor not only will deteriorate power factor improvement effect, but also may cause capacitor abnormal heating. Therefore, never install a phase leading capacitor.**
- **Make sure that the power unbalance ratio is not greater than 2%. If it is greater, the unit's lifespan will be reduced.**
- **Introducing with a missing N-phase or with a mistaken N-phase will break the equipment.**

◆ Precautions when laying power cable

Use round pressure terminals for connections to the power terminal block.

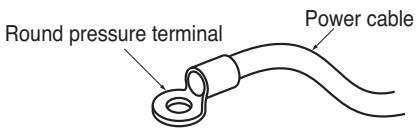

When none are available, follow the instructions below.

- Do not connect wiring of different thicknesses to the power terminal block. (Slack in the power cable may cause abnormal heat.)
- When connecting cable which is the same thickness, do as shown in the figure below.

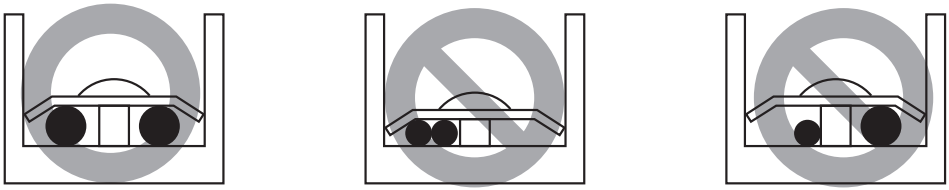

- For wiring, use the designated power cable and connect firmly, then secure to prevent outside pressure being exerted on the terminal block.
- Use an appropriate screwdriver for tightening the terinal screws. A screwdriver with a small head will strip the head and make proper tighterning impossible.
- Over-tightening the terminal screws may break them.

Connection method of the connecting cable (Example)

1. Connect power supply cable to terminal block of control case using clamps on the supporter and control case as shown figure right.
2. Connect communication cable to main PCB terminal block using clamps on the supporter and main PCB case as shown figure right.

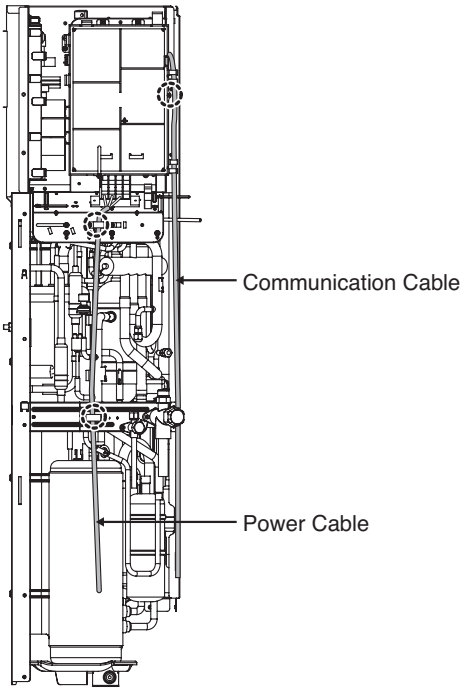

Connecting Cables

Types of the cables

Classification		types	Cable cross section
Indoor	Power cable(CV)	mm^2 x cores	4.0 x 3
Outdoor	Power cable(H05RN-F)	mm^2 x cores	6.0 x 3
	Communication cable(VCTF-SB)	mm^2 x cores	1.0~1.5 x 2

Safety Breaker

Current Recommended Fuses	Indoor Unit	Outdoor Unit
A	30	30

The distance between communication cable and power cable

- If the power cable and communication cable are tied together, system malfunction may occur with electrostatic, electromagnetic combination effect causing the interference signal. If communication cable is connected along with power cable, secure at least 50mm distance between indoor unit power cable and communication cable.

It is the value with the assumption of the length of the parallel cable as 100 m.
If it is longer than 100m, it shall be calculated again with proportional to the added length.
If the distortion in the waveform of the power still occurs despite securing the distance, increase the distance.

※ When several power cables are inserted into the transmission line, or tied together, make sure to consider the following issues.
- Power cables and communication cable shall not be in the same transmission line.
- Power cables and communication cable shall not be tied together.

WARNING

- Are all of the indoor units and outdoor units grounded?
- If grounding is not properly done, there is a risk of electric shock. Grounding must be done by a qualified technician.
- Consider the surrounding conditions(surrounding temperature, direct sunlight, rain water, etc.) when wiring the cable.
- The thickness of the power cable is the minimum thickness of metal conductor cable. Use thicker cable considering the voltage drop.

Communication and Power cable

1) Remote control cable

- Types : 3-core cable

2) Central control cable

- Types : 4-core cable (Shielding wire)
- Cross section : over 1.0~1.5mm^2
- Insulation material : PVC

3) Separation of communication and power cable

- If communication and power cable are run alongside each other then there is a strong likelihood of operational faults developing due to interference in the signal wiring caused by electrostatic and electromagnetic coupling.
  In case of install communication and power cable together, the distance should be over 50mm

Distance from power of other facility

Current capacity of power cable		Spacing
100V or more	10A	300mm
	50A	500mm
	100A	1000mm
	Exceed 100A	1500mm

Note:

1. The figures are based on assumed length of parallel cabling up to 100m. For length in excess of 100m the figures will have to be recalculated in direct proportion to the additional length of line involved.
2. If the power supply waveform continues to exhibit some distortion the recommended spacing in the table should be increased.

- If the cable are laid inside conduits then the following point must also be taken into account when grouping various lines together for introduction into the conduits
- Power cable(including power supply to air conditioner) and signal lines must not be laid inside the same
- In the same way, when grouping the cable power and signal cable should not be bunched together.

CAUTION

- **If apparatus is not properly earthed then there is always a risk of electric shocks, the earthing of the apparatus must be carried out by a qualified person.**
- **Use a power cable pipe for the power cable.**

Wiring of Main Power Supply and Equipment Capacity

Indoor unit (1Ø, 220-240, 50Hz)

Outdoor unit (1Ø, 220-240, 50Hz)

1. Separate power supply lines for the indoor units from outdoor unit.
2. Bear in mind ambient conditions (ambient temperature,direct sunlight, rain water,etc.) when proceeding with the wiring and connections.
3. The wire size is the minimum value for metal conduit wiring. The power cord size should be 1 rank thicker taking into account the line voltage drops. Make sure the power-supply voltage does not drop more than 10%.
4. Specific wiring requirements should adhere to the wiring regulations of the region.
5. Power supply cords of parts of appliances for outdoor use should not be lighter than polychloroprene sheathed flexible cord.
6. Don't install an individual switch or electrical outlet to disconnect each of indoor unit separately from the power supply.

WARNING

- **Follow ordinance of your governmental organization for technical standard related to electrical equipment, wiring regulations and guidance of each electric power company.**
- **Make sure to use specified wires for connections so that no external force is imparted to terminal connections. If connections are not fixed firmly, it may cause heating or fire.**
- **Make sure to use the appropriate type of overcurrent protection switch. Note that generated overcurrent may include some amount of direct current.**

CAUTION

- **Some installation site may require attachment of an earth leakage breaker. If no earth leakage breaker is installed, it may cause an electric shock.**
- **Do not use anything other than breaker and fuse with correct capacity. Using fuse and wire or copper wire with too large capacity may cause a malfunction of unit or fire.**

Installation Manual and a note on the value added Ssc

- In accordance with EN/IEC 61000-3-11, respectively EN/IEC 61000-3-12, it may be necessary to consult the distribution network operator to ensure that the equipment is connected only to a supply with Zsys≤Zmax, respectively Ssc ≥ minimum Ssc value.
- European/International Technical Standard setting the limits for voltage changes, voltage fluctuations and flicker in public low-voltage supply systems for equipment with rated current ≤ 75A.
- European/International Technical Standard setting the limits for harmonic currents produced by equipment connected to public low-voltage systems with input current ≤16A of >75A per phase.

5. Accessories Installation

Location of Accessories and External Parts Connection

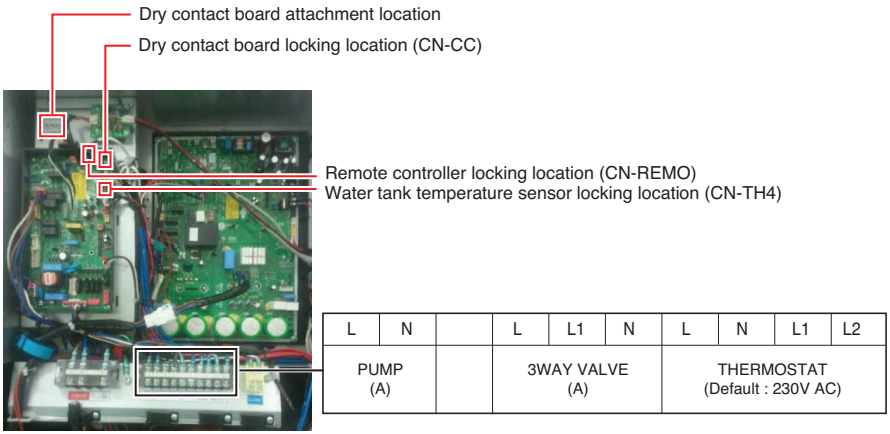

- Connect 3way valve, if both floor heating and hot water is used.
- Connect the separately purchased thermostat.
- Dry contact is an accessory supplied by Corporation and installed by referring to the attached installation manual.
- 3way valve, thermostat and pump are external parts for installation, which are not supplied by Corporation. After checking each part carefully, install external parts respectively.
- Connect the cable of each accessory to the terminal block of the control box in the AWHP.
- Check the label attached on the terminal block to prevent wrong connection.
- Use the pump of 220 voltage and maximum operation current of 4A or less.
- Select a suitable relay for pump capacity when connecting the pump to the unit.

WARNING:

- Install the unit after turning off the main power.
- Do not connect the products out of range specified in the manual.
- Do not work with wet hand.

Installation of Wired Remote Controller

1. Please fix tightly using provided screw after placing remote controller setup board on the place where you like to setup.

- Please set it up not to bend because poor setup could take place if setup board bends. Please set up remote controller board fit to the reclamation box if there is a reclamation box.

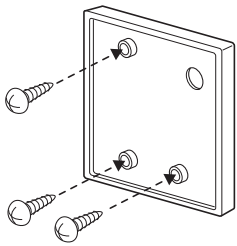

2. Can set up Wired remote controller cable into three directions.

- Setup direction: the surface of wall reclamation, upper, right
- If setting up remote controller cable into upper and right side, please set up after removing remote controller cable guide groove.

❈ Remove guide groove with long nose.

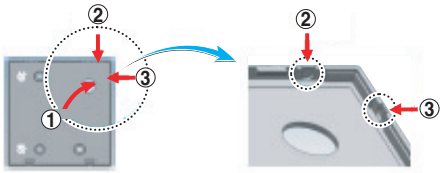

<Wire guide grooves>

① Reclamation to the surface of the wall
② Upper part guide groove
③ Right part guide groove

3. Please fix remote controller upper part into the setup board attached to the surface of the wall, as the picture below, and then, connect with setup board by pressing lower part.

- Please connect not to make a gap at the remote controller and setup board's upper and lower, right and left part.

<Connecting order>

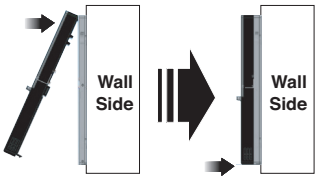

When separating remote controller from setup board, as the picture below, after inserting into the lower separating hole using screw driver and then, spinning clockwise, remote controller is separated.

- There are two separating holes. Please individually separate one at a time.
- Please be careful not to damage the inside components when separating.

<Separating order>

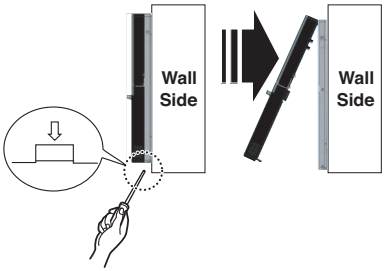

4. Please connect indoor unit and remote controller using connection cable.

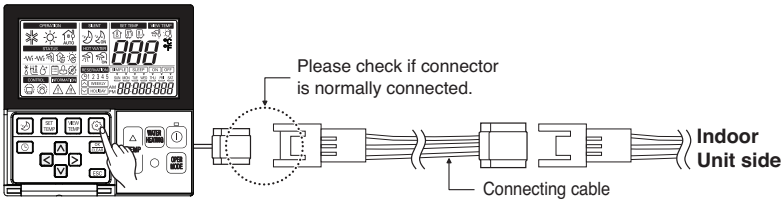

5. Please use extension cable if the distance between wired remote controller and indoor unit is more than 10m.

⚠ CAUTION

When installing the wired remote controller, do not bury it in the wall.
(It can cause damage in the temperature sensor.)
Do not install the cable to be 50m or above. (It can cause communication error.)

- When installing the extension cable, check the connecting direction of the connector of the remote controller side and the product side for correct installation.
- If you install the extension cable in the opposite direction, the connector will not be connected.
- Specification of extension cable: 2547 1007 22# 2 core 3 shield 5 or above.

Main Pump Connection

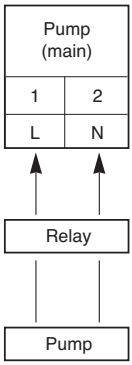

- Select the suitable pump by referring to the flow rate table with water temperature difference between the entrance and the exit.
  *It is recommended that the flow rate is 23LPM.
- Use the pump with enough capacity to guarantee the loss of entire water pressure and to supply the Indoor Unit with water.
- Select a suitable relay for pump capacity when connecting the pump to the unit.
- Connect the relay to the terminal block 11 and 12 of the control box.

CAUTION

- Make sure to supply external power with the pump.

Water tank temperature sensor Connection

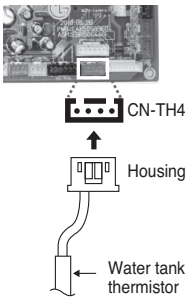

- Connect sensor housing to PCB‘CN-TH4’ connector (red).

CAUTION

- If water tank temperature sensor is not connected, error will occur.
  (CH08) Exclude the case of using floor heating.

ENGLISH

Thermostat

Thermostat is generally used to control the unit by air temperature. When thermostat is connected to the unit, the unit operation is controlled by the thermostat.

Installation Condition

CAUTION

1. USE 1~230 V Thermostat.
2. Some electro-mechanical type thermostat has internal delay time to protect compressor. In that case, mode change can takes time more than user's expectation. Please read thermostat manual carefully if the unit does not response quickly.
3. Setting temperature range by thermostat can be different with that of the unit. The heating set temperature should be chosen within the setting temperature range of the unit.
4. It is highly recommended that the thermostat should be installed where space heating is mainly applied.

Following location should be avoid to secure proper operation :

- Height from floor is approximately 1.5 m.
- Thermostat can not be located where the area may be hidden when door is open.
- Thermostat can not be located where external thermal influence may be applied. (such as above heating radiator or open window)

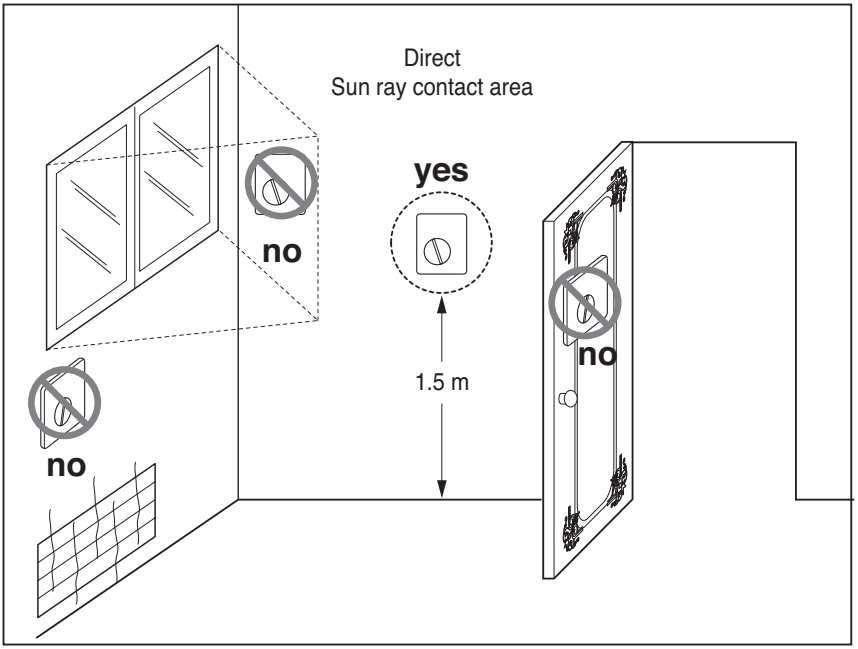

General Information

Indoor Unit supports following thermostats.

Type	Power	Operating Mode	Supported
Mechanical (1)	1~ 230 V	Heating Only (3)	Yes
Electrical (2)	1~ 230 V	Heating Only (3)	Yes

(1) There is no electric circuit inside the thermostat and electric power supply to the thermostat is not required.
(2) Electric circuit such as display, LED, buzzer, etc is included in the thermostat and electric power supply is required.
(3) Thermostat generates "Heating ON or Heating OFF" signal according to user"s heating target temperature.

How to Wire Thermostat

Follow below procedures Step 1 ~ Step 4.

Step 1. Uncover front cover of the unit and open the control box.

Step 2. Identify the power specification of the thermostat.
1~230V thermostat is used (For High Temperature).

Step 3. If it is Heating Only Thermostat, go to step 4.

Step 4. Find terminal block and connect wire as below.

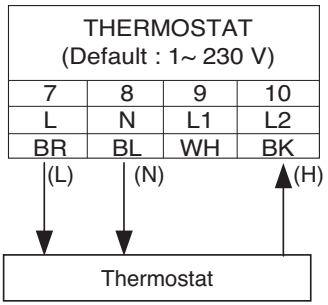

WARNING :

Mechanical type Thermostat.
Do not connect wire (N) as mechanical type thermostat does not require electric power supply.

CAUTION

Do not connect external electric loads.
Wire (L) and (N) should be used only for operation Electric type thermostat.
Never connect external electric loads such as valves, fan coil units, etc.
If connected, Main PCB Assembly 1 can be seriously damaged.

(L) : Live signal from PCB to Thermostat
(N) : Neutral signal from PCB to Thermostat
(H) : Heating signal from Thermostat to PCB

Final Check

- DIP switch setting :
  Set DIP switch No. 8 to ‘ON’. Otherwise, the unit can not recognize the thermostat.
- Remote Controller :
  - ‘Thermostat’ icon is displayed on the remote controller.
  - Button input is prohibited.

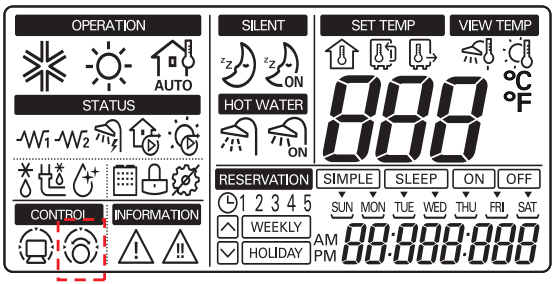

Thermostat Icon

NOTICE

Thermostat Operation with Remote Controller

Following features are permitted when thermostat is installed :

- SET TEMP — SET TEMP button
- VIEW TEMP — VIEW TEMP button
- TEMP — Temperature adjusting button(*)
- WATER HEATING — Sanitary water heating button

(*) : The unit is not turned on/off according to the setting temperature at the remote controller.
It is turned on/off according to the thermostat signal.

Following features are NOT permitted when thermostat is installed :

- OPER MODE — Operating mode (heating/ weather-dependent) selection
- Time scheduling
- Operation On / Off

Sequence of thermostat operation

- How to set the heating temperature when thermostat is connected.

Set thermostat to the heating mode → Adjust the heating temperature, using the remote controller

Remote Temperature Sensor

Remote temperature sensor can be installed any place a user wants to detect the temperature.

How to Install Remote Temperature Sensor

Step 1. After deciding where the remote temperature sensor is installed, decide the location and height of the fixing screws. (Interval between the screws : 60mm)

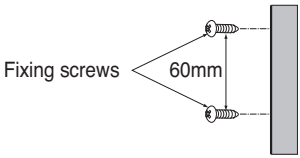

Step 2. Insert the connector of the connection wire into the space for the connector in place of the room temperature sensor.(CN_ROOM)

Step 3. Separately, set the option code of the attached controller on the indoor unit.
In detail, refer to "installer setting mode".

Step 4. The Connection wire does not matter if you change the color of the wire because of non-polar.

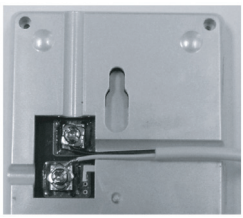

Step 5. Integrate the remote temperature sensor with the screws as the order of arrows.

Fixing the
Remote Sensor

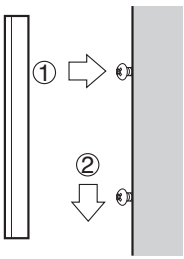

CAUTION

1. Choose the place where the average temperature can be measured for the indoor unit operates.
2. Avoid direct sunlight.
3. Choose the place where the heating devices do not affect the remote sensor.
4. Choose the place where the outlet of the cooling fan do not affect the remote sensor.
5. Choose the place where the remote sensor isn't affected when door is open.

ENGLISH

3Way Valve

3way valve is required to operate sanitary water tank. Role of 3way valve is flow switching between under floor heating loop and water tank heating loop.

General Information

Indoor Unit supports following 3way valve.

Type	Power	Operating Mode	Supported
SPDT 3-wire (1)	1~ 230 V	Selecting “Flow A” between “Flow A” and “Flow B” (2)	Yes
		Selecting “Flow B” between “Flow A” and “Flow B” (3)	Yes

(1) SPDT = Single Pole Double Throw. Three wires consist of Live (for selecting Flow A), Live 1 (for selecting Flow B), and Neutral (for common).

(2) Flow A means ‘water flow from the unit to sanitary water tank’

(3) Flow B means ‘water flow from the unit to under floor water circuit’

How to Wire 3Way Valve

Follow below procedures Step 1 ~ Step 2.

Step 1. Uncover front cover of the unit and open the control box.

Step 2. Find terminal block and connect wire as below.

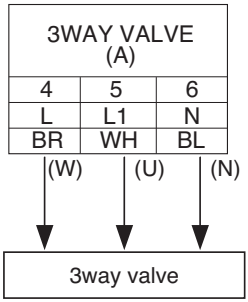

WARNING :

- 3way valve should select water tank loop when electric power is supplied to wire (W) and wire (N).
- 3way valve should select under floor loop when electric power is supplied to wire (U) and wire (N).

(W) : Live signal (Water tank heating) from PCB to 3way valve

(U) : Live signal (Under floor heating) from PCB to 3way valve

(N) : Neutral signal from PCB to 3way valve

WARNING :

Mice can not be appeared to prevent entering the unit or attacking wires.

Final Check

• Flow direction :

- Water should flow from water outlet of the unit to sanitary tank water inlet when sanitary tank heating is selected.
- To verify the flow direction, check temperature at the water outlet of the unit and water inlet of sanitary water tank.
- If correctly wired, these temperatures should be almost equivalent if thermal insulation of water pipe is well performed.

• Noise or water pipe vibration while 3way valve operation

- Due to surging effect or cavitation effect, noise or water pipe vibration can be occurred while 3way valve is operating.
- In that case, check followings :
  - Is water circuit (both under floor water loop and sanitary water tank loop) fully charged? If not, additional water charging is required.
  - Fast valve operation yields noise and vibration. Appropriated valve operating time is 60~90 seconds.

ENGLISH

Dry Contact

Dry Contact is a solution for automatic control of HVAC system at the owner's best.
In simple words, it's a switch which can be used to turn the unit On/Off after getting the signal from external sources like key-in lock, door or window switch etc specially used in Hotel rooms.

How to Install Dry Contact

Connect CN_DRY with Control Unit.

- To apply power source through Dry Contact PCB.

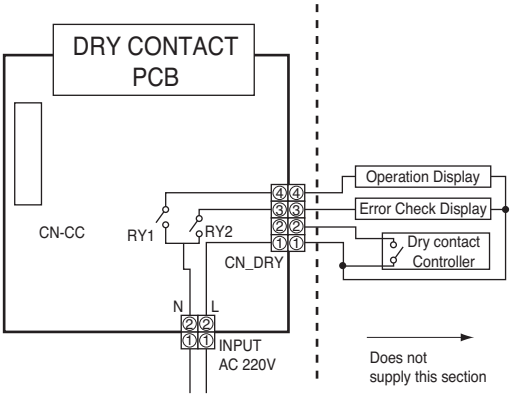

- To apply power source directly to external source.

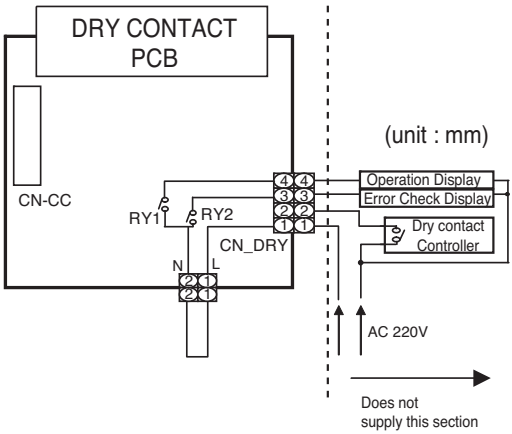

6. System Set-Up

As Air-to-Water Heat Pump (For High Temperature) is designed to satisfy various installation environment, it is important to set up system correctly. If not configured correctly, improper operation or degrade of performance can be expected.

DIP Switch Setting

1) Indoor

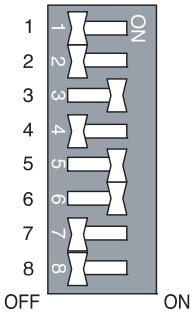

- Turn off electric power supply before setting DIP switch, There is risk of electric shock.
- Dip switch is turned on when pulled right.
- Always set dip switch #6 to ON and #7 to OFF.
- Do not set dip switch #2 to ON and #3 to OFF.
- If dip switch is not set as below, the unit may not operate properly.

X : OFF ● : On

Description	Dip switch setting								Function	Default
	1	2	3	4	5	6	7	8		
Installation Scene		X	X						Floor heating only	
		X	●						Floor heating + Hot water	○
		●	●						Hot water only	
Emergency operation				X					High temperature operation	○
				●					Low temperature operation	
Water pump control					X				Water pump controlled	
					●				Water pump NOT controlled	○
Thermostat connection								X	Thermostat NOT installed	○
								●	Thermostat installed	

ENGLISH

2) Outdoor

Main PCB

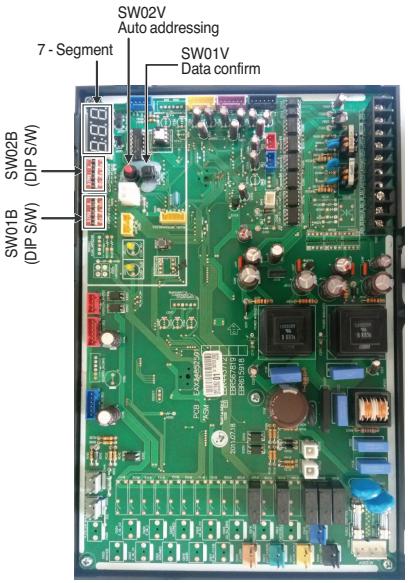

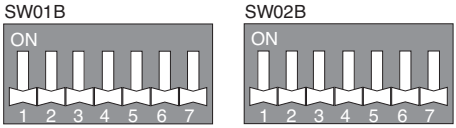

<Initial shipping condition of DIP Switch>

1. When outdoor unit is powered on after configuring the DIP switch, proper input of configuration value can be verified through 7-Segment.
2. This function is shown only for 2 seconds after turning on the power.

■ **Verification of outdoor unit configuration**

- After power is turned on, number are shown on 7-Segment consecutively
- These numbers show the configuration status

In case of 1Ø, 16 kW model

Seqence	NO.	Content
1	31	Model code, 1~255
2	5	Nominal Capacity(HP)
3	2	2 : heatpump No display : cooling only
4	25	Normal
5	30	Model type, 1~255

Model Code

Phase	Capacity(kW)	Model code	Model type
1Ø	16	31	30

WARNING

- **Main PCB power should be reset in order to recognize the changed function after handling the DIP switch for configuration of additional functions.**
- **Main PCB power should be reset after resetting the DIP switch for cancellation of additional function**
- **Please configure DIP switch properly. Otherwise, It can overstrain product during operation**

CAUTION

1. "X" mark means DIP switch must be off, Otherwise the function may not perates correctly.
2. If each DIP switch doesn't set correctly, unit will operate abnormally.
3. In case of proceeding test run, start after checking if all indoor unit is off.

■ Setting the DIP switch

- If you set the Dip switch when power is on, the changed setting will not be applied immediately. The changed setting will be enabled only when Power is reset or by pressing Reset button.

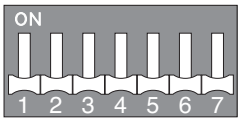

1 2 3 4 5 6 7

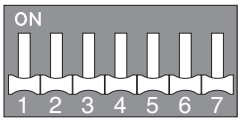

8 9 10 11 12 13 14

	1	2	3	4	5	6	7	8	9	10	11	12	13	14
Short Pipe Length	●	×												
Long Pipe Length	×	●												
Snow							×	●	×					
Forced Defrosting							×	×	●					
Snow + Forced Defrosting							×	●	●					
Pump Down										●				×
Vacuum Mode											●			●

CAUTION

1. **"X" mark means dip switch must be off. Otherwise the function may not operates correctly.**
2. **If each dip switch doesn't set correctly, unit will operate abnormally.**
3. **In case of proceeding test run, start after checking if all indoor unit is off.**

■ The Procedure of Automatic Addressing

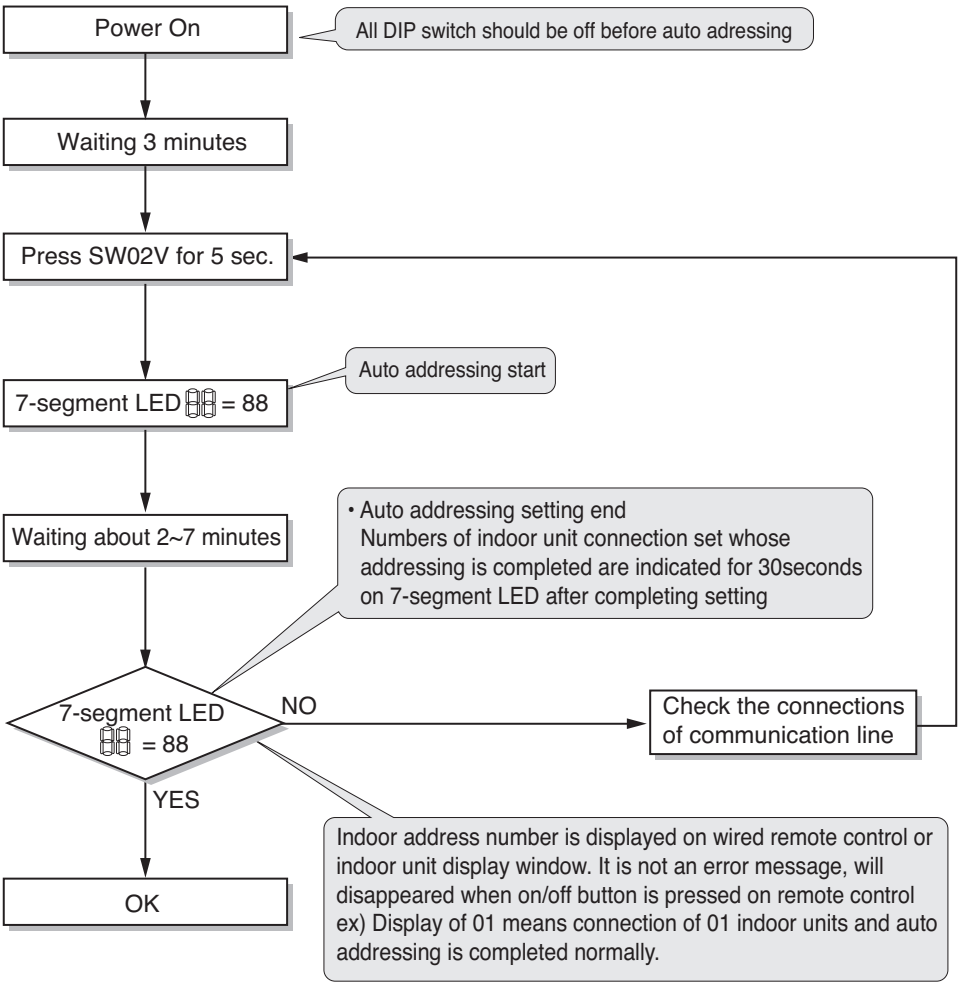

■ How to connect central controller

- The communication lines connected to INTERNET terminal should be connected to central control of Outdoor unti with care for their polarity(A → A, B → B)
- Connect communication lines between outdoor unit and indoor units through the terminal block.
- When connecting communication line between outdoor unit and indoor units with shielded wire, connect the shield ground to the earth screw.
- When connecting the central control system with shielded wire, connect the shield ground to the earth screw.

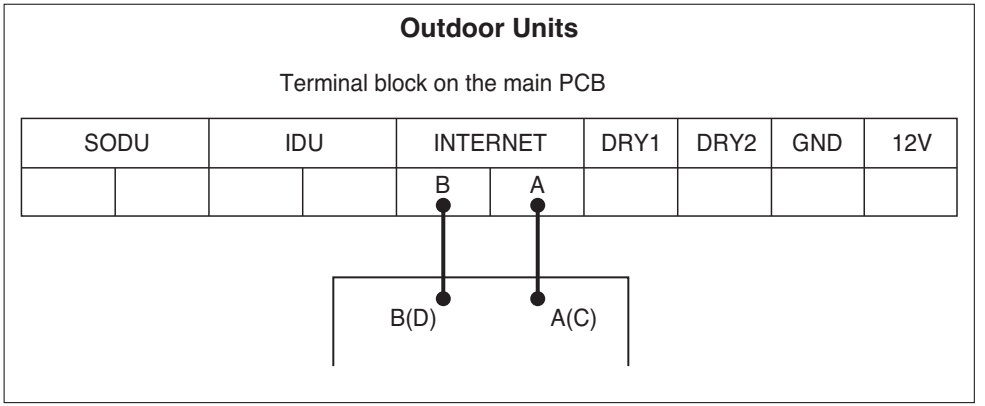

NOTICE

Emergency Operation

• **Definition of terms**

- **Trouble :** a problem which can stop system operation, and can be resumed temporally under limited operation without certificated professional's assist.
- **Error :** problem which can stop system operation, and can be resumed ONLY after certificated professional's check.
- **Emergency mode :** temporary heating operation while system met Trouble.

• **Objective of introducing 'Trouble'**

- Not like airconditioning unit, **Indoor Unit** is generally operated in whole winter season without any system stopping.
- If system found some problem, which is not critical to system operating for yielding heating energy, the system can temporarily continue in emergency mode operation with end user's decision.

• **Classified Trouble**

- Trouble is classified two levels according to the seriousness of the problem : Slight Trouble and Heavy trouble
- **Slight Trouble :** Sensor trouble.
- **Heavy trouble :** Compressor cycle trouble.
- **Option Trouble :** a problem is found for option operation such as water tank heating. In this trouble, the troubled option is assumed as if it is not installed at the system.

• **Emergency operation level**

- When the system is faced with trouble, it stops and waits for user's decision. : Calling service center or starting emergency operation.
- To start emergency operation, user simply push ON / OFF button once more.
- Two different levels are prepared for emergency operation : High temperature cycle and low temperature cycle.
- In emergency operation mode, user can not adjust target temperature.

	DIP Switch (No. 4)	Target Leaving Water Temperature	Target Room Air Temperature	Target Sanitary Water Temperature
High temperature cycle	OFF	70°C(158°F)	24°C(75°F)	70°C(158°F)
Low temperature cycle	ON	50°C(122°F)	19°C(66°F)	50°C(122°F)

• **Following features are permitted in emergency operation :**

- Operation On/Off
- VIEW TEMP button(*)
- Temperature adjusting button(**)
- Sanitary water heating button

(*) : Temperature measured by failed sensor is displayed as '- -'.

(**) : The unit is not turned on/off according to the setting temperature at the remote controller.
It is turned on/off according to the thermostat signal.

• **Following features are NOT permitted in emergency operation :**

- Operating mode (heating/ weather-dependent) selection
- Time scheduling
- SET TEMP button

• **Duplicated trouble : Option trouble with Slight or Heavy trouble**
If option trouble is occurred with slight (or heavy) trouble at the same time, the system puts higher priority to slight (or heavy) trouble and operates as if slight (or heavy) trouble is occurred.
Therefore, sometimes sanitary water heating can be impossible in emergency operation mode.
When sanitary water is not warming up while emergency operation, please check whether the sanitary water sensor and related wiring are connected well or not.

• **Emergency operation is not automatically restarted after main electricity power is reset.**
In normal condition, the unit operating information is restored and automatically restarted after main electricity power is reset.
But in emergency operation, automatic re-start is prohibited to protect the unit.
Therefore, user must restart the unit after power reset when emergency operation has been running.

ENGLISH

Installer Setting

How to enter installer setting mode

CAUTION

Installer setting mode is to set the detail function of the remote controller.
If the installer setting mode is not set correctly, it could cause problems to the unit, user injury or property damage. This must be set by an certificated installer, and any installation or change that is carried out by a non-certificated person should be responsible for the results. In this case, free service cannot be provided.

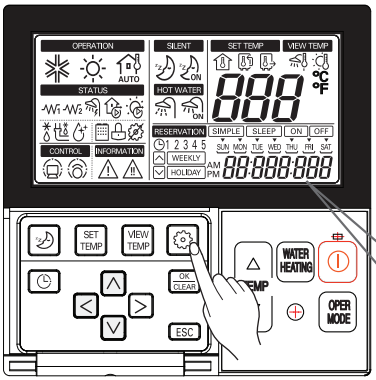

1 Press Function Setting button for 3 seconds to enter the installer setting mode.

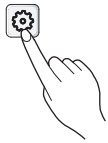

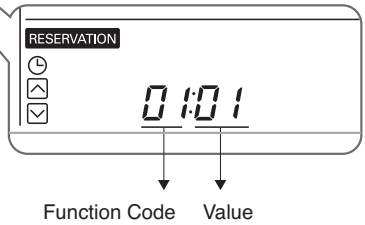

(When you enter the installer setting mode initially, function code is displayed on the bottom of the LCD screen.)

Repeat pressing button, and the function code will be changed from 01 to 2B.
Please refer the code table on the next page.

Summary

Example of Fuction Code Display

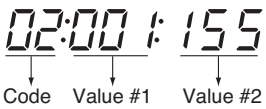

Function	Default	Value #1	Value #2	Remark
Disable 3 Min. Delay	02:01	01	-	
Remote Air Sensor Connection	03:01	01 : NOT connected. 02 : connected.	-	
Celsius/Fahrenheit Switching	04:01	01 : Celsius 02 : Fahrenheit	-	
Setting Temp. Selection	05:02	01 : Air Temp. 02 : Leaving water Temp.	-	
Auto Dry Contact	06:01	01 : Auto Start OFF 02 : Auto Start ON	-	
Address Setting	07:00	00 ~ FF	-	
Override Setting	08:00	00 : Slave 01 : Master	-	
Water Pump Test Run	09:00	01 : Set		
Setting Air Temp. (Heating Mode)	13:030:016	24°C(75°F) ~ 30°C(86°F) : Upper Limit of setting range	16°C(60°F) ~ 22°C(71°F) : Lower Limit of setting range	
Setting Leaving Waer Temp. (Heating Mode)	14:080:046	50°C(122°F) ~ 80°C(176°F) : Upper Limit of setting range	30°C(86°F) ~ 46°C(114°F) : Lower Limit of setting range	
Setting Sanitary Tank Water Temp. (Sanitary Water Heating)	15:080:046	50°C(122°F) ~ 80°C(176°F) : Upper Limit of setting range	30°C(86°F) ~ 46°C(114°F) : Lower Limit of setting range	
Setting outdoor Temp. range (Weather-dependent operation)	23:-10:015	10°C(50°F) ~ 20°C(68°F) : Upper Limit of setting range	-20°C(-4°F) ~ 05°C(41°F) : Lower Limit of setting range	
Setting indoor air Temp. range (Weather-dependent operation)	24:021:016	20°C(68°F) ~ 30°C(86°F) : Upper Limit of setting range	16°C(60°F) ~ 19°C(66°F) : Lower Limit of setting range	
Setting leaving water Temp. (Weather-dependent operation)	25:080:046	65°C(149°F) ~ 80°C(176°F) : Upper Limit of setting range	40°C(104°F) ~ 54°C(129°F) : Lower Limit of setting range	
Setting start/maintain time (Disinfection Operation)	26:000	00 : Disable 01 : Enable	-	
	26:006:023	01~07 : Starting Date (01:Sun, 02:Mon, ····, 07:Sat)	00~23 hours : Starting Time in 24 hours	
Setting Temp. (Disinfection Operation)	27:070:010	40°C(104°F) ~ 70°C(129°F)70 : Maximum heating Temp.	05~60 min : Maximum heating duration	
Setting control parameter (Sanitary water heating operation)	28:005:080	01°C(33°F) ~ 20°C(68°F) : Temp. gap from Value #2	50°C(122°F) ~ 80°C(176°F)	
Setting control parameter (Sanitary water heating operation)	29:003:000	02°C(35°F) ~ 04°C(39°F)	00~01	
Setting sanitary water heating timers	2b:030	5 ~ 95 min (step: 5 min)	-	
	2b:180:020	0 ~ 600 min (step: 30 min)	20 ~ 95 min (step: 5 min)	
Changing thermal on/off room air Temp.	2E:00	00~03	-	
Changing thermal on/off leaving water Temp.	2F:00	00~03	-	
Program version	30:***	Display Version number	-	

*Temp. = Temperature

Common Setting

- **Function Code 02** : Disable 3 minute Delay
  Only used for an inspection in a factory.

- **Function Code 03** : Remote Air Sensor Connection
  If remote air sensor is connected to control the unit by room air temperature, the connection information should be notified to the unit.

  Note : If remote air sensor is connected but this function code is not set correctly, the unit can not be controlled by room air temperature.

- **Function Code 04** : Celsius/Fahrenheit Switching
  Temperature is displayed in Celsius or Fahrenheit.

- **Function Code 05** : Setting Temperature Selection
  The unit can be operated according to air temperature or leaving water temperature. The selection for setting temperature as air temperature or leaving water temperature is determined.

  Note : Air temperature as setting temperature is ONLY available when Remote Air Sensor Connection is enabled and Function Code 03 is set as 02.

- **Function Code 06** : Auto Dry Contact
  This function enables the Dry Contact to operate under Auto Run mode or Manual mode with remote controller.

  If thermostat is used, value should be changed from "2" to "1".

- **Function Code 07** : Address Setting
  When Central Controller is installed, address assigning is set by this function.

- **Function Code 08 :** Override Setting
  Override master/slave selection function is to prevent the unit's different mode operation. If the unit is set as the slave, it blocks a change of opposite operating mode(cooling/heating).

  ❊ To use override master/slave selection function is only possible when units are connected in series to the outdoor unit.

- **Function Code 09 :** Water Pump Test Run
  After water pipe work is done, Water Pump Test Run mode should be performed to check whether water circulation is normal.

Temperature Range Setting

- **Function Code 13** : Setting Air Temperature in Heating Mode
  Determine heating setting temperature range when air temperature is selected as setting temperature.

CAUTION

Only available when remote air temperature sensor is connected.
- Accessory PQRSTA0 should be installed.
- Also, Function Code 03 should be set properly.

- **Function Code 14** : Setting Leaving Water Temperature in Heating Mode
  Determine heating setting temperature range when leaving water temperature is selected as setting temperature.

- **Function Code 15** : Setting Sanitary Tank Leaving Water Temperature
  Determine heating setting temperature range of water tank leaving water.

NOTICE

Only available when sanitary water tank temperature sensor is installed.
- Sanitary water tank and sanitary water tank kit should be installed.
- DIP switch No. 2 and 3 should be set properly.

Temperature Control Parameter Setting and Etc

- **Function Code 23, 24, and 25** : Setting Weather-dependent operation

  Weather-dependent operation is that the unit automatically adjusts target temperature (leaving water or room air) according to the outdoor air temperature.

  - Value #1 and Value #2 of Function Code 23 : range of outdoor air temperature
  - Value #1 and Value #2 of Function Code 24 : range of auto-adjustable target room air temperature
  - Value #1 and Value #2 of Function Code 25 : range of auto-adjustable target leaving water temperature

  Note : Weather-dependent operation is applied for heating mode only.

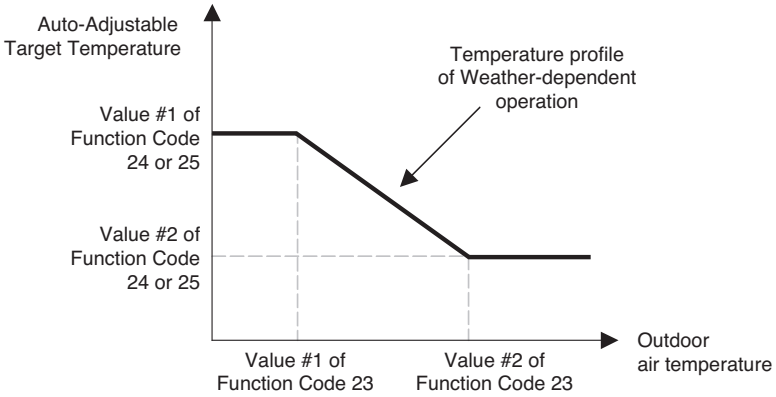

- **Function Code 26 and 27** : Setting Disinfection operation

Disinfection operation is special sanitary tank operation mode to kill and to prevent growth of viruses inside the tank.

- Value #1 of Function Code 26 : Selecting disinfection operation mode. ‘00’ for setting disinfection mode off, and ‘01’ for setting disinfection mode on.
- Value #2 of Function Code 26 : Determining the date when the disinfection mode is running. ’01’ for Sunday, ’02’ for Monday, … , and ’06’ for Saturday.
- Value #3 of Function Code 26 : Determining the time when the disinfection mode is running. ’00’ for 0:00am, ’01’ for 01:00am, … , ’22’ for 10:00pm, and ’23’ for 11:00pm.
- Value #1 of Function Code 27 : Target temperature of disinfection mode.
- Value #2 of Function Code 27 : Duration of disinfection mode.

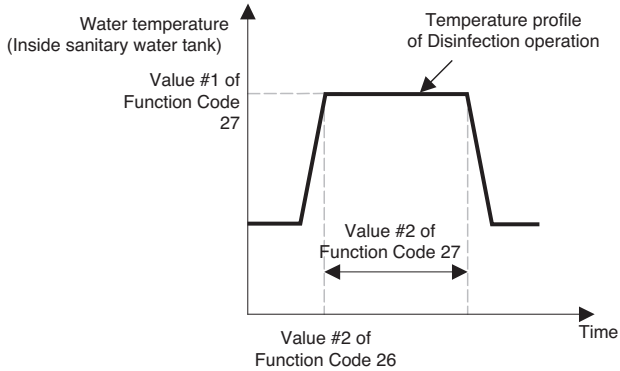

WARNING

Vales of Function Code 26

- If Value #1 of Function Code 26 is set as ’00’, Value #2 and Value #3 is not used.
- When Value #1 is set as ’01’, Value #2 is displayed at the position of Value #1 and Value #3 is displayed at the position of Value #2 due to limited width of the control panel display.

CAUTION

Sanitary water heating should be enabled

- If sanitary water heating is disabled, the disinfection mode will not be operated although Value #1 of Code 26 is set as ’01’.
- To use disinfection mode, sanitary water heating should be enabled.

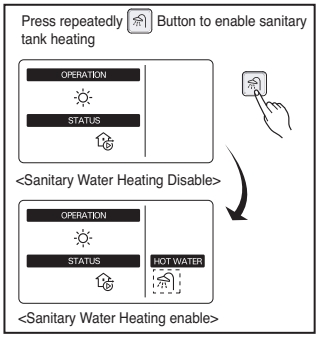

- **Function Code 28 and 29** : Setting control parameter for Sanity water heating operation

Descriptions for each parameters are as following.

- Value #1 of Function Code 28 : temperature gap from Value #2 of Function Code 28.
- Value #2 of Function Code 28 : maximum temperature.
- Example : If Value #1 is set as ‘5’ and Value #2 is set as ’80’, then water tank heating will be started when the water tank temperature is below 75°C(167°F).
- Value #1 of Function Code 29 : temperature gap from target sanitary water temperature.
- Value #2 of Function Code 29 : Determining heating demand priority between sanitary water tank heating and under floor heating.
- Example : If user’s target temperature is set as ’50’ and Value #1 is set as ‘3’, then water tank heating will be turned off when the water temperature is above 53°C(127°F). Water tank heating will be turned on when the water temperature is below 50°C(122°F).
- Example : If Value #2 is set as ‘0’, that means heating priority is on sanitary water heating, In this case the under floor can not be heated while sanitary water heating. On the other hand, if the Value #2 is set as ‘1’, that means heating priority is on under floor heating, sanitary tank can not be heated while under floor heating.

NOTICE

Sanitary water heating does not operate when it is disabled.

Enabling / Disabling sanitary water heating to operate is determined by pushing button.

When icon is displayed on the remote controller, sanitary water heating is enabled. (by button input or scheduler programming)

- **Function Code 2B** : Setting sanitary water heating timers
  Determine time duration : Operation time and stop time of sanitary tank heating.
  - Value #1 of Function Code 2B : This time duration defines how long sanitary tank heating can be continued.
  - Value #2 of Function Code 2B : This time duration defines how long sanitary tank heating can be stopped. It is also regarded as time gap between sanitary tank heating cycle.
  - Example of timing chart :

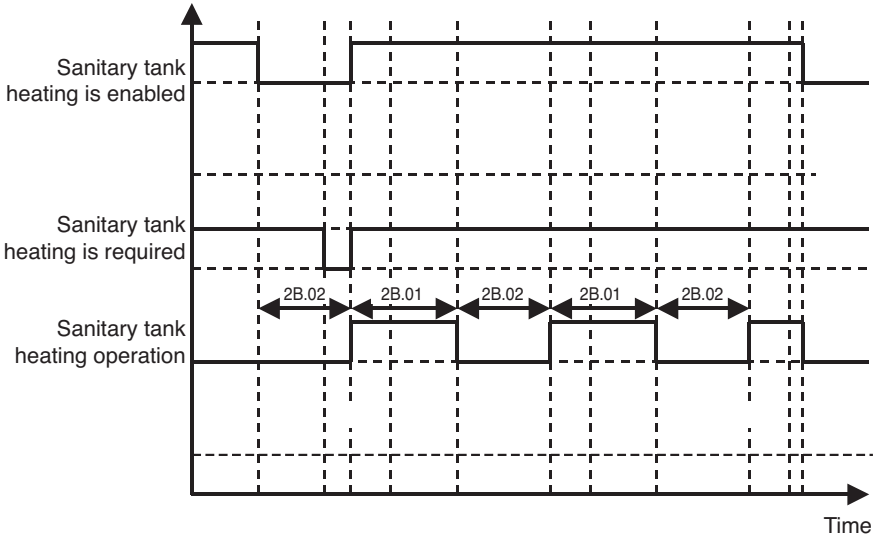

- **Function Code 2E and 2F :** Changing thermal on/off temperature
  Select Thermal on/off Temperature gap.

2E : Room Air temperature

	Th On	Th Off
0	-0.5°C	1.5°C
1	4°C	6°C
2	2°C	4°C
3	-1°C	1°C

2F : Leaving Water temperature

	Th On	Th Off
0	-2°C	2°C
1	-6°C	4°C
2	-2°C	4°C
3	-1°C	1°C

- **Function Code 30 :** Remote Controller Program Version
  Display Remote Controller Program Version.

ENGLISH

7. Test Run

Checks before Test Run

1. **Test run should be performed after auto-addressing**
2. **Test run can be performed when 3 minutes passed after power on, by DIP switches and buttons.**
   - needs time for initializing data of micom and readying communication with indoor unit.
3. **7-segment of outdoor unit displays test run status and error.**
4. **During test run, if error occurs, then test run ends and proceeds final stage of test run**
   - system should be initial status by initializing all data of test run pressing black button for 2 seconds after all DIP switch off
5. **In case of finishing test run during test run, press black and red button simultaneously for 5 seconds.**
6. **When test run is finished, indoor units are stopped and 938 is displayed after 90 seconds.**
7. **To perform FDD logic test, proceeds when 3 minutes passed after reset.**

CAUTION

when cutting main power of the Air-to-Water Heat Pump

- **Always apply main power of the outdoor unit during use of product (cooling season/heating season).**
- **Always apply power 6 hours in advance to heat the crank case heater where performing test run after installation of product. It may result in burning out of the compressor if not pre-heating the crank case with the electrical heater for more than 6 hours.(In case of the outdoor temperatue below 10°C)**

Test Run Procedure

Step 0. Check order signal
Select the function of tust run

Step 1. Sensor checking
Check sensor abnormality.

Step 2. Refrigerant auto charging
In case of adding additional refrigerant, this function helps adding refrigerant automatically.

Step 3. Refrigerant checking
Check refrigerant amount is proper.

Caution before Operation Test

- Check whether water flow is smoothly supplied.
- Check whether the flow switch properly operates.
- Check whether the connection status is good.
- Check whether the power cable and communication cable are completely connected.
- Check whether it is 2.0MΩ or above, when insulation resistance between the terminal block and ground is measured with DC mega tester (DC 500V).
- Never check insulation resistance for the connector of the control board.

Operation Test of Water Pipe

Category	Status	Checkpoint
Flow Switch Error	CH14	Check whether operation of water pipe is normal.
		Check for the block inside water pipe.
		(Strainer cleaning, valve locked, valve malfunction, air remaining, etc.)
		Check problem with flow switch.
		(Flow switch disorder, untold operation, disconnection, etc.)

ENGLISH

Troubleshooting

1) Indoor Unit

- This function displays the disorder types at the self diagnostics and the occurrence of the disorder for the product.
- The disorder display shows the code in the following table on the red/green LED of the wired remote controller and outdoor unit control board.
- If two or more types of disorders occur simultaneously, it displays in the order of the error number.
- If inverter PCB error occurs, No. 12 error is displayed in the remote controller, and inverter PCB board LED can be used to verify detail error display.
- After error occurs, the error code disappears when the disorder is repaired.

❊ Error code 01, 08, 17, 18 can be operated with emergency operation.

Error No.	Error Type	Main Reasons
01	Air temperature sensor error	Air temperature sensor disconnection or short circuit
03	No communication between wired remote controller & indoor unit	The remote controller does not receive the signal from indoor unit during specific time
05	Indoor unit & outdoor unit communication error	No signal communication between indoor unit & outdoor unit
08	Water tank temperature sensor error	Water tank temperature sensor disconnection or short circuit
09	Indoor unit EEPROM error	Communication between the micro-processor & the EEPROM / Error due to EEPROM damage
11	Indoor unit & inverter PCB communication error	No signal communication between indoor unit & inverter PCB
12	Inverter PCB error	Error occurrence in inverter PCB
14	Flow switch error	Abnormal working of flow switch
15	Water pipe overheated	Water outlet temperature is above 90°C
16	Water inlet & outlet temperature sensor error	Water inlet & outlet temperature sensor disconnection or short circuit simultaneously
17	Water inlet temperature sensor error	Water inlet temperature sensor disconnection or short circuit
18	Water outlet temperature sensor error	Water outlet temperature sensor disconnection or short circuit

Inverter PCB error display method
Red LED means error number 10 digits, and green LED means 1 digit, and if red and green blink at the same time, it means the unit of 100.
Ex) Inverter compressor IPM defect Error : error number 21

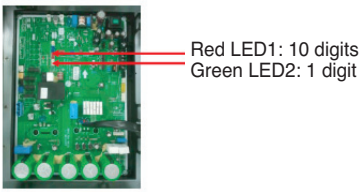

Error Code	Description	LED 1 (Red)	LED 2 (Green)
21	Inverter compressor IPM efect	2times ◑	1time ◑

Error No.	Error Type	Main Reasons
21	Inverter compressor IPM defect	Inverter compressor drive IPM defect / inverter compressor defect
22	Inverter compressor overcurrent	Increase of inverter compressor CT value
23	Inverter compressor DC Link low voltage	After inverter activation relay is ON, DC voltage recharge defect
25	High/low Inverter input voltage	Inverter input voltage exceeds the unit limit and lasts for 4 sec. (173V ~ 289V)
26	Inverter compressor activation failure	Inverter compressor error, causing initial activation failure
27	Inverter PSC/PFC Fault Error	Error by overcurrent at inverter input
28	Inverter DC Link high voltage error	Inverter DC voltage recharge, causing compressor OFF
29	Inverter compressor overcurrent	Inverter compressor activation failure or increase of CT value
32	Excessive rise of inverter compressor discharge temperature	Excessive rise of inverter compressor discharge temperature, causing compressor OFF
34	Excessive rise of high pressure of inverter compressor	Excessive rise of high pressure of inverter compressor, causing compressor OFF
35	Excessive drop of low pressure of inverter compressor	Excessive drop of low pressure of inverter compressor, causing compressor OFF
36	Low pressure ratio error of inverter compressor	High pressure/low pressure ratio of inverter compressor is maintained at below 1.8 for 3 min. or more
40	Inverter compressor CT sensor defect	Inverter compressor CT sensor defect
41	Inverter compressor discharge pipe temperature sensor defect	Inverter compressor discharge temperature sensor disconnection or short circuit
42	Low pressure sensor defect of inverter compressor	Low pressure sensor disconnection or short circuit of inverter compressor
43	High pressure sensor defect of inverter compressor	High pressure sensor disconnection or short circuit of inverter compressor
44	Inverter inside air temperature sensor defect	Inverter inside air temperature sensor disconnection or short circuit
46	Inverter compressor suction pipe temperature sensor defect	Inverter compressor suction temperature sensor disconnection or short circuit
53	Communication error(indoor unit → outdoor unit main PCB)	Outdoor unit does not receive signal from indoor unit
60	Inverter PCB EEPROM error	Inverter PCB EEPROM error
62	Excessive rise of inverter heatsink temperature	Inverter PCB heat generation, causing the rise of heatsink temperature
65	Inverter heatsink temperature sensor defect	Inverter heatsink temperature sensor disconnection or short circuit
73	Overcurrent (Peak) detected at inverter input	Error by overcurrent detection at inverter input

2) Outdoor Unit

Error Indicator

- This function indicates types of failure in self-diagnosis and occurrence of failure for air condition.
- Error mark is displayed on display window of indoor units and wired remote controller, and 7-segment LED of outdoor unit control board as shown in the table.
- If more than two troubles occur simultaneously, lower number of error code is first displayed.
- After error occurrence, if error is released, error LED is also released simultaneously.

Error Display

1st,2nd LED of 7-segment indicates error number, 3rd LED indicates unit number.

	Error No.			Error Type	Main Reasons
Outdoor unit related error	2	1	1	Inverter compressor IPM defect	Inverter compressor drive IPM defect / inverter compressor defect
	2	2	1	Inverter compressor over current	Increase of inverter compressor CT value
	2	3	1	Inverter compressor DC Link low voltage	After inverter activation relay is ON, DC voltage recharge defect
	2	4	1	Outdoor Unit High Pressure Switch	System is turned off by outdoor unit high pressure switch.
	2	5	1	High/low Inverter input voltage	Inverter input voltage exceeds the unit limit and lasts for 4 sec. (173V ~ 289V)
	2	6	1	Inverter compressor activation failure	Inverter compressor error, causing initial activation failure
	2	7	1	Inverter PSC/PFC Fault Error	Error by overcurrent at inverter input
	2	8	1	Inverter DC Link high voltage error	Inverter DC voltage recharge, causing compressor OFF
	2	9	1	Inverter compressor overcurrent	Inverter compressor activation failure or increase of CT value
	3	2	1	Excessive rise of inverter compressor discharge temperature	Excessive rise of inverter compressor discharge temperature, causing compressor OFF
	3	4	1	Excessive rise of high pressure of inverter compressor	Excessive rise of high pressure of inverter compressor, causing compressor OFF
	3	5	1	Excessive drop of low pressure of inverter compressor	Excessive drop of low pressure of inverter compressor, causing compressor OFF
	3	6	1	Low pressure ratio error of inverter compressor	High pressure/low pressure ratio of inverter compressor is maintained at below 1.8 for 3 min. or more
	4	0	1	Inverter compresso'r CT sensor defect	Inverter compressor CT sensor defect
	4	1	1	Inverter compressor discharge pipe temperature sensor defect	Inverter compressor discharge temperature sensor disconnection or short circuit
	4	2	1	Low pressure sensor defect of inverter compressor	Low pressure sensor disconnection or short circuit of inverter compressor
	4	3	1	High pressure sensor defect of inverter compressor	High pressure sensor disconnection or short circuit of inverter compressor
	4	4	1	Inverter inside air temperature sensor defect	Inverter inside air temperature sensor disconnection or short circuit
	4	5	1	Outdoor Unit Heat Exchanger Temperature Sensor Fault	Outdoor Unit Heat Exchanger Temperature Sensor Open or Short

	Error No.				Error Type	Main Reasons
Outdoor unit related error	4	6	1		Inverter compressor suction pipe temperature sensor defect	Inverter compressor suction temperature sensor disconnection or short circuit
	4	9	1		Defective IPM Temperature Sensor	Disconnection or short circuit on IPM temperature sensor of the outdoor unit
	5	2	1		Communication error : inverter PCB → Main PCB	Failing to receive inverter signal at main PCB of Outdoor Unit
	5	3	1		Communication error(indoor unit → outdoor unit main PCB)	Outdoor unit does not receive signal from indoor unit
	5	7	1		Communication error : inverter PCB → Main PCB	Restriction of Outdoor Unit (Inverter PCB)
	6	0	1		Inverter PCB EEPROM error	Inverter PCB EEPROM error
	6	2	1		Excessive rise of inverter heatsink temperature	Inverter PCB heat generation, causing the rise of heatsink temperature
	6	7	1		Outdoor Unit Fan Lock	Restriction of Outdoor Unit Fan
	7	3	1		Overcurrent (Peak) detected at inverter input	Error by overcurrent detection at inverter input
	8	6	1		Outdoor Unit Main PCB EEPROM Error	Communication Fail Between Outdoor Unit Main MICOM and EEPROM or omitting EEPROM
	8	8	1		PFC PCB EEPROM Error	Communication Fail Between Outdoor Unit PFC MICOM and EEPROM or omitting EEPROM
	1	1	3	1	Outdoor Unit Liquid pipe Temperature Sensor Error	Liquid pipe temperature sensor of outdoor unit is open or short
	1	1	5	1	Outdoor Unit Subcooling Outlet Temperature Sensor Error	Outdoor Unit Subcooling Outlet Temperature Sensor open or short
	1	5	1	1	Failure of operation mode conversion at Outdoor Unit	Pressure unbalance between outdoor units

LG

Life's Good