LG
Life's Good

ENGLISH

INSTALLATION MANUAL

AHU COMMUNICATION KIT

- Please read this installation manual completely before installing the product.
- Installation work must be performed in accordance with the national wiring standards by authorized personnel only.
- Please retain this installation manual for future reference after reading it thoroughly.

MODEL : PRDCA0

P/NO : MFL50024804

www.lg.com

TIPS FOR SAVING ENERGY

Here are some tips that will help you minimize the power consumption when you use the air conditioner. You can use your equipment more efficiently by referring to the instructions below:

- Do not cool excessively indoors. This may be harmful for your health and may consume more electricity.
- Block sunlight with blinds or curtains while you are operating the equipment.
- Keep doors or windows closed tightly while you are operating the equipment.
- Adjust the direction of the air flow vertically or horizontally to circulate indoor air.
- Speed up the fan to cool or warm indoor air quickly, in a short period of time.
- Clean the air filter once every 2 weeks. Dust and impurities collected in the air filter may block the air flow or weaken the cooling / dehumidifying functions.

For your records

Staple your receipt to this page in case you need it to prove the date of purchase or for warranty purposes. Write the model number and the serial number here:

Model number : _____

Serial number : _____

You can find them on a label on the side of each unit.

Dealer's name : _____

Date of purchase : _____

IMPORTANT SAFETY INSTRUCTIONS

READ ALL INSTRUCTIONS BEFORE USING THE APPLIANCE.

Always comply with the following precautions to avoid dangerous situations and ensure peak performance of your product

WARNING

It can result in serious injury or death when the directions are ignored

CAUTION

It can result in minor injury or product damage when the directions are ignored

WARNING

- Installation or repairs made by unqualified persons can result in hazards to you and others.
- Installation MUST conform with local building codes or, in the absence of local codes.
- The information contained in the manual is intended for use by a qualified service technician familiar with safety procedures and equipped with the proper tools and test instruments.
- Failure to carefully read and follow all instructions in this manual can result in equipment malfunction, property damage, personal injury and/or death.

Installation

- Always perform grounding.
  - Otherwise, it may cause electrical shock.
- Don't use a power cord, a plug or a loose socket that is damaged.
  - Otherwise, it may cause fire or electrical shock.
- For installation of the product, always contact the service center or a professional installation agency.
  - Otherwise, it may cause fire, electrical shock, explosion or injury.
- Securely attach the electrical part cover to AHU Comm. Kit.
  - If the electric part cover of AHU Comm. Kit is not attached securely, it could result in a fire or electric shock due to dust, water, etc.
- Always install an air leakage breaker and a dedicated switching board.
  - No installation may cause a fire and electrical shock.
- Do not keep or use flammable gases or combustibles near the equipment.
  - Otherwise, it may cause a fire or the failure of product.
- Do not install, remove or reinstall the unit by yourself.
  - Otherwise, it may cause a fire, electrical shock, explosion or injury.
- Do not disassemble or repair the product randomly.
  - It will cause a fire or electrical shock.
- Do not install the product in a place where there is the concern of falling down.
  - Otherwise, it may result in personal injury.
- Use caution when unpacking and installing.
  - Sharp edges may cause injury.

Operation

- Do not share the outlet with other appliances.
  - It will cause an electric shock or a fire due to heat generation.
- Do not use the damaged power cord.
  - Otherwise, it may cause a fire or electrical shock.
- Do not modify or extend the power cord randomly.
  - Otherwise, it may cause a fire or electrical shock.
- Take care so that the power cord may not be pulled during operation.
  - Otherwise, it may cause a fire or electrical shock.
- Unplug the unit if strange sounds, smell, or smoke comes from it.
  - Otherwise, it may cause electrical shock or a fire.
- Keep flames away.
  - Otherwise, may occur a fire.
- Take the power plug out if necessary, holding the head of the plug and do not touch it with wet hands.
  - Otherwise, it may cause a fire or electrical shock.
- Do not use the power cord near the heating tools.
  - Otherwise, it may cause a fire and electrical shock.
- Do not allow water to run into electrical parts.
  - Otherwise, it may cause the failure of machine or electrical shock.
- Hold the plug by the head when taking it out.
  - It may cause electric shock and damage.
- Be cautious that water could not enter the product.
  - Otherwise, it may cause a fire electrical shock or product damage.
- Do not step on the indoor/outdoor unit and do not put anything on it.
  - It may cause an injury through dropping of the unit or falling down.
- Do not place a heavy object on the power cord.
  - Otherwise, it may cause a fire or electrical shock.
- When the product is submerged into water, always contact the service center.
  - Otherwise, it may cause a fire or electrical shock.

TABLE OF CONTENTS

2 **TIPS FOR SAVING ENERGY**

3 **IMPORTANT SAFETY INSTRUCTIONS**

6 **INSTALLATION SCENE**

7 **SUPPLIES**

8 **OPTIONAL ACCESSORIES**

9 **PART DESCRIPTION**

9 Communication Kit (PRDCA0)

10 **BEFORE INSTALLATION**

13 **COMMUNICATION KIT INSTALLATION**

13 Mechanical installation

14 Electric Wiring Work

15 Electric Wiring Work

16 Electrical Work

17 Electric Wiring Work

18 Controller Setting Method

23 **AHU KIT WIRING CONFIGURATION WITH DDC**

23 Configuration concept

24 DI Wring concept

25 DO Wring concept

26 AI Wring concept

28 FAN Signal Wiring Concept

29 **THERMISTORS INSTALLATION**

29 Pipe thermistors Installation

32 **TROUBLESHOOTING**

INSTALLATION SCENE

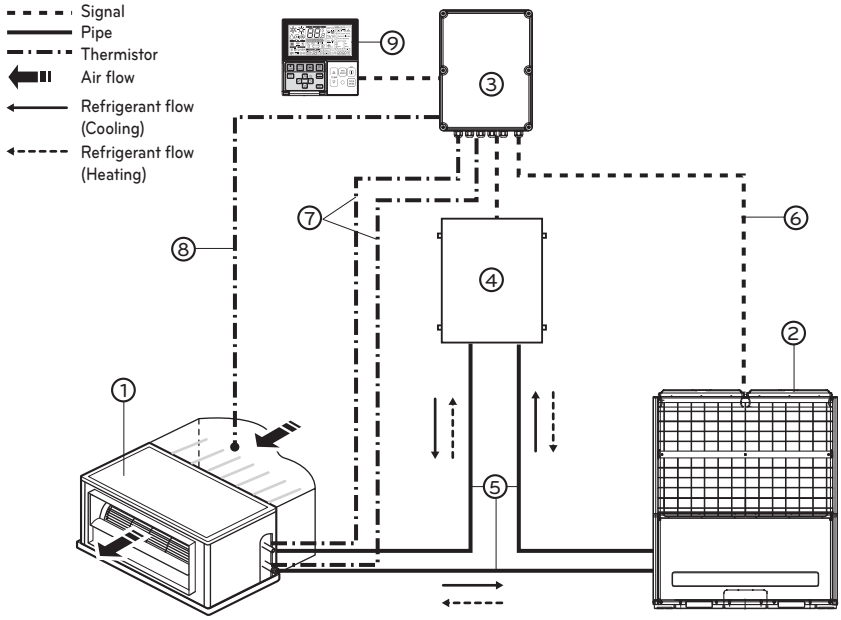

Parts and components		
No.	Name	Remarks
1	Air Handling Unit	Field supply
2	Outdoor Unit	Multi V
3	AHU Communication Kit(PRDCA0)	-
4	AHU EEV Kit(PRLK048A0/PRLK096A0)	-
5	Field piping	Field supply
Wiring connections		
6	Communication Kit Wiring	Power supply and communication between comm. kit and outdoor unit
7	Pipe thermistors (EBG61287703/EBG61287704)	Evaporator (In/Out) control of Air Handling Unit
8	Room thermistor (EBG61106821)	Return air control
9	Remote controller(PQRCVSL0 / PQRCVSL0QW)	Optional accessory

CAUTION

For Installation of Room thermistor (No. 8), always place it at the inlet of Heat Exchanger. Otherwise, it might not operate properly.

SUPPLIES

PRDCA0						
Compo-nents	AHU Comm. Kit	Room thermistor	Pipe thermistors	Installation Manual	Bracket	Option PCB
P/NO	AJT73857401	EBG61106821	EBG61287703(In) EBG61287704(Out)	MFL50024804	MAZ49398901	EBR52358907 ~17
Shape	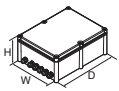		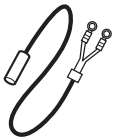		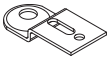	
Quanti-ty(EA)	1	1	2(Each 1)	1	4	11(Each 1)

Model Name	Weight (kg)		Dimension (mm)						POWER
	NET	Gross	NET			Gross			
			W	H	D	W	H	D	
PRDCA0	6.0	8.0	330	180	430	420	232	540	220-240 V~ 50 Hz 220 V~ 60 Hz 208/230 V~ 60 Hz

ENGLISH

OPTIONAL ACCESSORIES

Accessories	
Components	Remote controller
Model name	PQRCVSL0 / PQRCVSL0QW
Shape	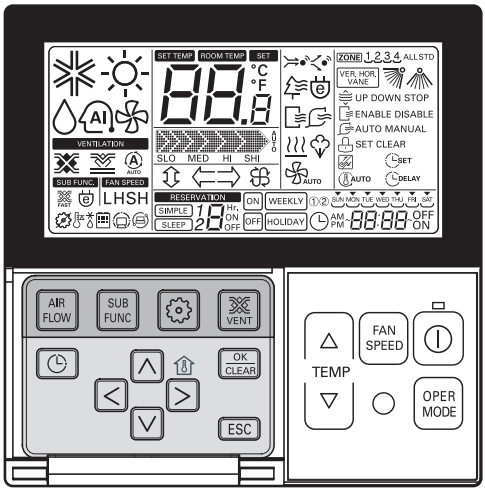

* For further details of the accessories, refer to the manual provided at the time of purchasing the accessories.

PART DESCRIPTION

Communication Kit (PRDCA0)

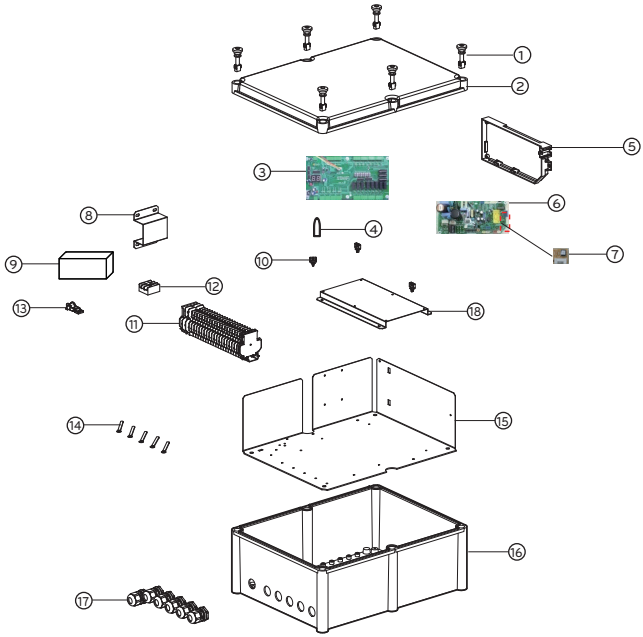

No. m	Part Name	Quantity (EA)
1	Plastic (+) Bolt	6
2	Cover	1
3	Expansion I/O PCB	1
4	Supporter (Connect No. 3)	6
5	Main PCB case	1
6	Main PCB	1
7	Option PCB (192 kBtu/hr)	1
8	Bracket (For Adaptor)	1
9	AC/DC Convertor	1
10	Supporter (Fixing Wiring)	7
11	Terminal Block (Communication)	1
12	Terminal Block (POWER Supply)	1
13	Clamp Cord (For Power Wiring)	1
14	Clamp Cord	5
15	Panel	1
16	Control Box Case	1
17	Cable gland	6
18	Bracket (For Expansion I/O PCB)	1

BEFORE INSTALLATION

⚠ CAUTION

- Don't install or operate the unit in rooms mentioned below.
  ① Where mineral oil, like cutting oil is present.
  ② Where the air contains high levels of salt such as air near the ocean.
  ③ Where sulphurous gas is present such as that in areas of hot spring.
  ④ In vehicles or vessels.
  ⑤ Where voltage fluctuates a lot such as that in factories.
  ⑥ Where high concentration of vapor spray are present.
  ⑦ Where machines generating electromagnetic waves are present.
  ⑧ Where acidic or alkaline vapor is present.
  ⑨ The option boxes must be installed with entrances downward.

- Check the mentioned below, when you apply the AHU (Field supply).
  ① If the AHU (Field supply) provided in the field is exclusively for heating, you must not change the operating mode to cooling on the remote controller. If not, it can cause electric shock, injury or death. If you want to operate in cooling mode, AHU (Field supply) must comply with the following details.
  (Following)
  - The insulation level of AHU (Field supply) motor must be 'F' or above, and the protection level must satisfy 'IP 54'.
  - AHU (Field supply) must have the drain pan installed.

  ② Fan speed button on the wired remote controller (PQRCVSL0 /PQRCVSL0QW) is not operated.
  ③ For refrigerant piping of outdoor unit, refer to the installation manual supplied with the outdoor unit.
  ④ For installation of the wired remote controller (PQRCVSL0 /PQRCVSL0QW), refer to the manual supplied with the wired remote controller.
  ⑤ For protecting the refrigerant cycle in heating, the inlet Air temperature to the Heat Exchanger has to be over 5°C.
  ⑥ The EEV or TXV kit has to be installed on the AHU as close as possible to the Heat Exchanger.

- AHU Communication Kit
  ① Thermistor cable and remote controller wire should be located at least 50mm away from power supply wires and from wires to the controller. Not following this guideline may result in malfunction due to electrical noise.
  ② Use only specified wires, and tightly connect wires to the terminals. Keep wiring in neat order so that it does not obstruct other equipment. Incomplete connections could result in overheating, and in worse case electric shock or fire.

⚠ CAUTION

Selection of Evaporator(Air Handling Unit)

See table below for applicable units

Selecting the capacity setting 'Option PCB'(Accessory) according to the capacity mentioned below.

- The corresponding capacity setting 'Option PCB' needs to be selected depending on the need capacity.
- After checking the need capacity, remove the 192 k Option PCB equipped in the main PCB, and set up the Option PCB fitted the need capacity in the main PCB.

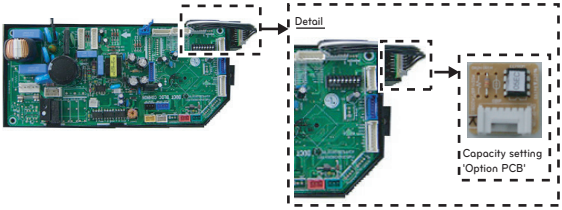

Option PCB P/NO	Capacity (Btu/h)	Standard heat exchanger volume ($10^{-3} \times m^3$)	Maximum heat exchanger capacity (kW)	Air Flow rate (CMM)
EBR52358907	28 k	2.7	8.6	22~26
EBR52358908	36 k	3.1	11	25~32
EBR52358909	42 k	3.4	13.8	31~35
EBR52358910	48 k	4.0	15.4	33~45
EBR52358911	76 k	5.4	22.2	50~64
EBR52358912	96 k	6.3	28.1	64~72
EBR52358914	115 k	7.3	33.7	72~88
EBR52358915	134 k	8.5	39.3	88~103
EBR52358916	153 k	9.5	45.4	103~116
EBR52358917	172 k	10.5	50.4	114~129
EBR52358913	192 k	11.2	56.2	121~137

* Evaporator Saturated Temperature(SST) = 6 °C, SH (Superheat) 5K, Air Temperature = 27 °C DBT / 19 °C WBT

* Heat exchanger volume [m^3] : Pipe cross-section × Tube length

-. Pipe cross-section [m^2] = $\pi \times ID^2 / 4$

-. Tube length [m] = Tube length of 1 pipe × Tube step × Tube row

⚠ CAUTION

- AHU Operation range
  - When installing Room thermistor, always place it to the inlet of Heat Exchanger. Otherwise, it may might not operate properly.
  - Range of the inlet Air temperature to the Heat Exchanger is 18 ~ 40°C for cooling & 5 ~ 30°C for heating. If the temperature is under 18°C for cooling & over 30°C for heating, the system might operate ON and OFF because of protection logic system's.

No	Connection condition	Combination
1	100% Fresh Air Intake AHU only are connected with outdoor units	1) The total capacity of 100% Fresh Air Intake AHU should be 50~100% of outdoor unit.

COMMUNICATION KIT INSTALLATION

Mechanical installation

1 Remove the Comm. Kit box cover by unscrewing the plastic bolt (6EA)

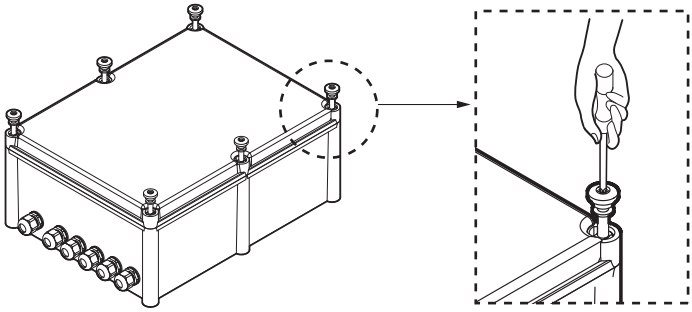

2 Drill 4 holes on correct position and fix the Comm. Kit box securely with 4 screws (Field supply) through the provided holes Ø4.5mm (Reference the length of the holes Ø4.5)

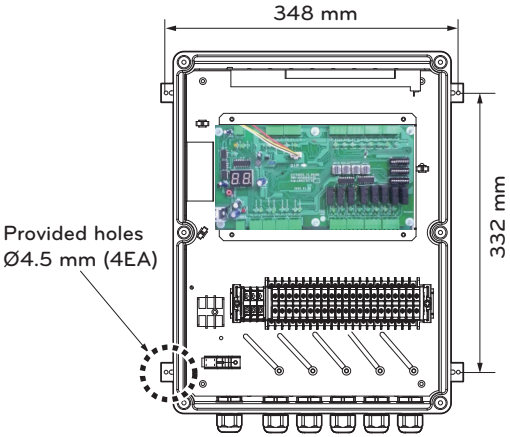

ENGLISH

Electric Wiring Work

Circuit diagram

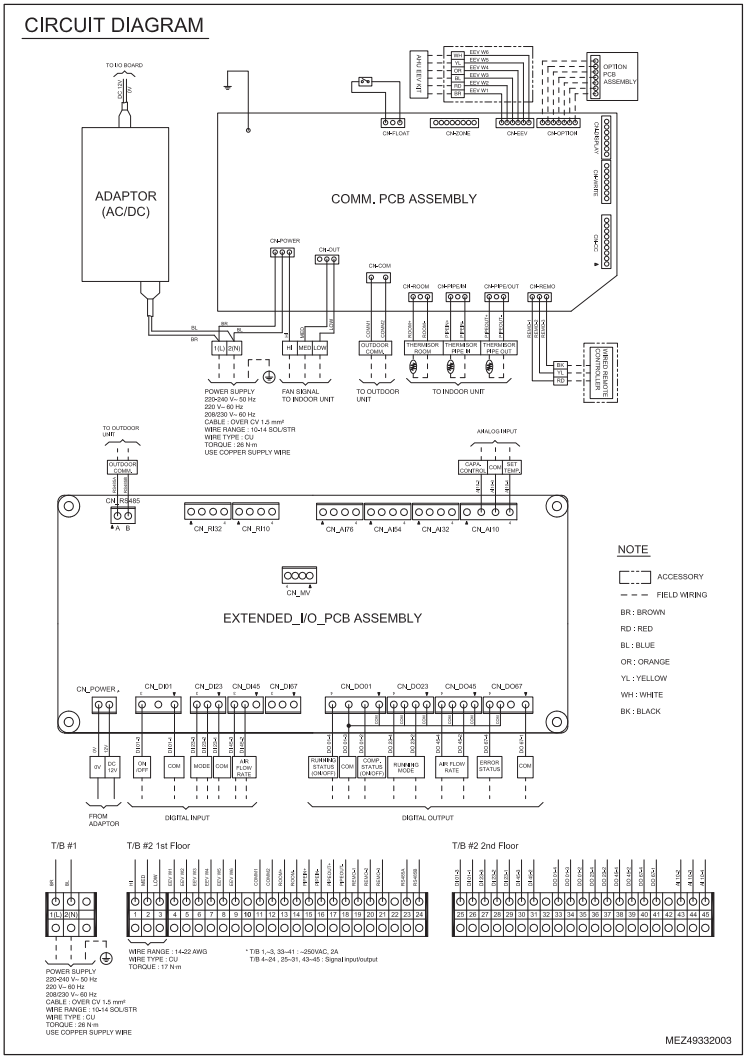

CAUTION

If you want to use Analogue Input signal for a variable capacity and a set temperature of room, you have to connect the wiring of AI 10-2, AI 10-3, AI 10-4.

Electric Wiring Work

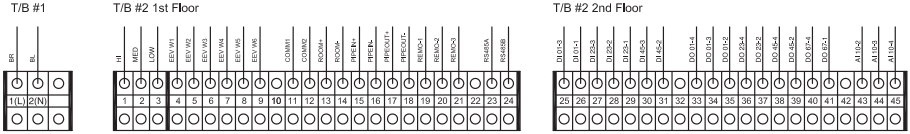

Terminal Block No.	Connection	Function	Remark.
1(L) / 2(N)	Power Supply	220-240 V~ 50 Hz 220 V~ 60 Hz 208/230 V~ 60 Hz	
1-3	To AHU	Fan Signal	High/Mid/Low
4-9	To EEV Kit	EEV Kit	-
11-12	To AHU	Communication Line	Internet A, B
13-14	To Indoor Unit	Room Thermistor	-
15-16		Pipe In Thermistor	-
17-18		Pipe Out Thermistor	-
19-21		Remote Controller	-
23-24	To Outdoor Unit	RS485 Communication	-
25	Digital Input	DI 01-3	Operation ON/OFF
26		DI 01-1	Common Line
27		DI 23-3	Mode Change
28		DI 23-2	
29		DI 23-1	Common Line
30		DI 45-3	Air Flow Rate
31		DI 45-2	
33	Digital Output	DO 01-4	Running Status (ON/OFF)
34		DO 01-3	Common Line
35		DO 01-2	Comp. Status (ON/OFF)
36		DO 23-4	Running Mode
37		DO 23-2	
38		DO 45-4	Air Flow Rate
39		DO 45-2	
40		DO 67-4	Error Status
41		DO 67-1	Common Line
43	Analog Input	AI 10-2	Capacity Control
44		AI 10-3	Common Line
45		AI 10-4	Room Temperature Setting

CAUTION

If you want to use Analogue Input signal for a variable capacity and a set temperature of room, you have to connect the wiring of AI 10-2, AI 10-3, AI 10-4.

Electrical Work

Connection of the wires

1 For connection to outdoor unit and to controller (Field supply) :
Pull the wires inside through the cable gland and close the nut firmly in order to ensure a good pull relieve and water protection.

2 The wires require an additional pull-relief. Strap the wire with the support tie wrap.

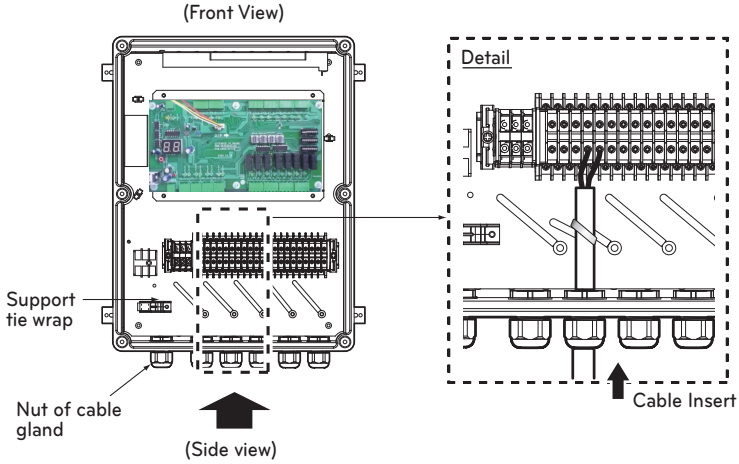

3 For the wired remote controller wire and outdoor unit communication wire, remove the coating at the end of the wire to connect and use the ring type (Ø3) to connect to the terminal block.

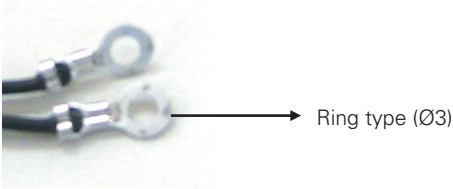

Electric Wiring Work

CAUTION

- All field supplied parts and materials and electric works must be conform to local codes.
- Use copper wire only.
- All wiring must be performed by an authorized electrician.
- A main switch or other means for disconnection, having a contact separation in all poles, must be incorporated in the fixed wiring in accordance to relevant local and national legislation.
- Refer to the installation manual attached to the outdoor unit for the size of power supply electric wire connected to the outdoor unit, the capacity of the circuit breaker and switch, wiring and wiring instructions.

Controller Setting Method

Capacity controller

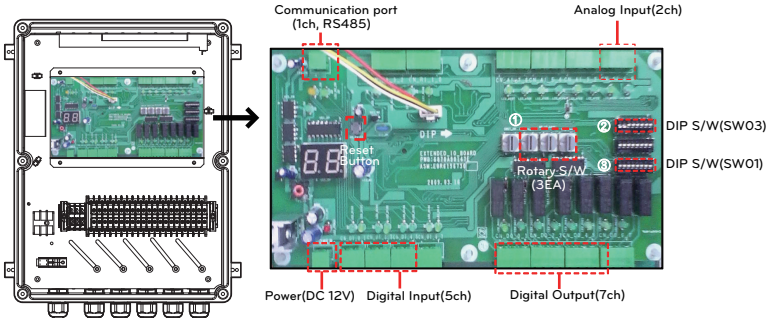

CAUTION

- DI requires non-voltage contact
- DO provides relay output (max : 250Vac 1A)
- AI : 0Vdc ~ 10Vdc
- RS485 port : Connect to INTERNET A/B on ODU's main PCB

1 Analog Input : Actually only AHU controller controls or regulate SA temperature, we only increase or decrease capacity of ODU and Comp. capacity of MULTI _V.

2 Digital Input : Acquires the control value of AHU operation from DDC(Field supply).

3 Digital Output : Send the condition value of AHU operation to DDC (Field supply).

4 RS485 : Sends the On/Off signal taking from DDC to the indoor & outdoor unit and send the condition value taking from indoor & outdoor unit to DDC with On/Off Output.

① Rotary S/W

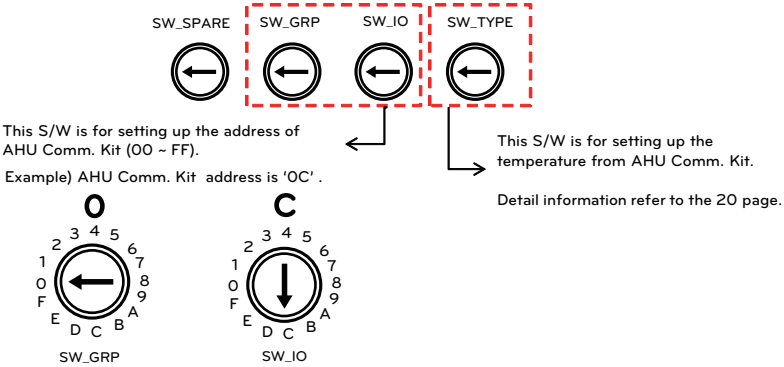

② Dip S/W(SW03)

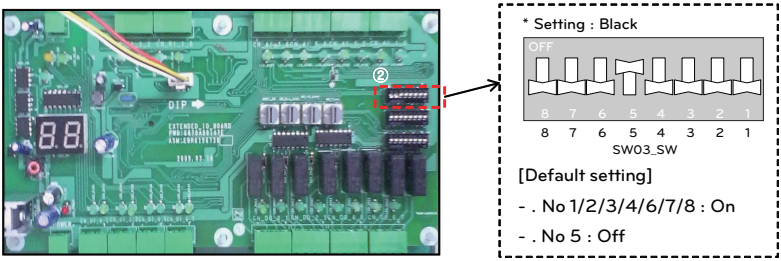

S/W name	No	Item	On	Off	Note
SW03 _SW	1	RS485/IDU	RS485	Not available	-. RS485 : Connect to INTERNET A/B on ODU unit
	2	Master/Slave	Master	Slave	-. Master is default for single unit installation -. Master is only one among multiple unit
	3	Control enable / disable	DI/DO enable	DO only enable	-. Enable : DI/DO are enable -. Disable : DO only are enable
	4	Room Temperature setting 1	AI	Rot.S/W	-. AI : Input as analog input (Controlled through DDC) -. Rot. S/W : manual setting
	5	Air flow rate	High/Low	High/Mid/Low	-. On : Mid step is not available. (Mid step is displayed as current step)
	6	Room Temperature setting 2	Default	AI / Rot. S/W	Room Temperature Default setting -. On : Default(Cooling 18°C, Heating 30°C) -. Off : Room air(or return air) temperature control using AI Signal and Rotary S/W (Refer to the DIP S/W No.4)
	7	Not available	-	-	-
	8	Flash Writing	Normal	On-boarding	-. Default : On

⚠ CAUTION

When the Dip S/W No. 6 is On, capacity control is possible and the value of Analogue input signal for temperature control, Rotary S/W and Remote controller is ignored. In case of setting the temperature of room using Analogue input signal , Rotary S/W and Remote controller, Dip S/W No. 6 have to be Off certainly.

③ Dip S/W(SW01)

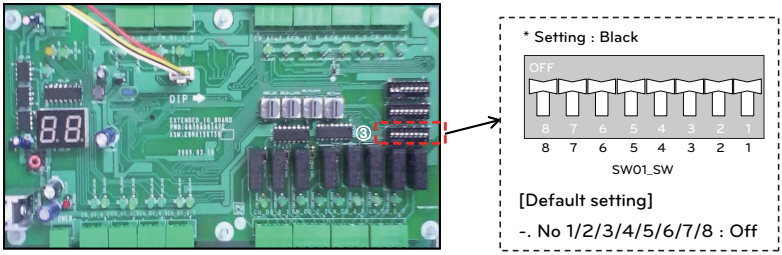

S/W name	No	Item	Setting Dip S/W			AI Function
			1	2	3	
SW01 _SW	1 ~3	ODU Capacity Option Setting	Off	Off	Off	Option #1
			On	Off	Off	Option #2
			Off	On	Off	Option #3
	4~8	Not available	-	-	-	-

④ Room Temperature control from DDC or Rotary S/W

※ According to Dip S/W(SW03) Setting, you can set up the Function of Room Temperature control.

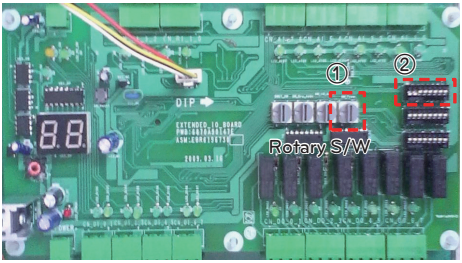

	Dip S/W(② SW03)		Function
Setting Dip S/W	No 1	ON	RS485 Communication with MULTI V
		OFF	Not available
	No 3	ON	Possible to control Room Temperature Function (Default)
		OFF	Only Monitoring (DO Signal only is enable)
	No 4	ON	DDC Control (Wiring No. AI 10-4)
		OFF	Rotary S/W(SW_TYPE) Control
	No 6	ON	Room Temperature Default setting (Cooling 18°C, Heating 30°C)
		OFF	Room Air(or return air) temperature control using AI signal and Rotary S/W

• Dip S/W(SW03) NO 4 : OFF

Rotary S/W(①) Number	Room Temp.(°C) Cooling	Room Temp.(°C) Heating
0	Not available	Not available
1	18	16
2	18	17
3	18	18
4	19	19
5	20	20
6	21	21
7	22	22
8	23	23
9	24	24
A	25	25
B	26	26
C	27	27
D	28	28
E	29	29
F	30	30

• Dip S/W(SW03) NO 4 : ON

Analog Input 10-4 (VDC)			Room Temp.(°C) Cooling	Room Temp.(°C) Heating
Normal	Range			
	Min.	Max.		
0.5	0	1.15	Not available	Not available
1.5	1.35	1.65	18	16
2	1.85	2.15	18	17
2.5	2.35	2.65	18	18
3	2.85	3.15	19	19
3.5	3.35	3.65	20	20
4	3.85	4.15	21	21
4.5	4.35	4.65	22	22
5	4.85	5.15	23	23
5.5	5.35	5.65	24	24
6	5.85	6.15	25	25
6.5	6.35	6.65	26	26
7	6.85	7.15	27	27
7.5	7.35	7.65	28	28
8	7.85	8.15	29	29
8.5	8.35	8.65	30	30
9.5	8.85	10	Not available	Not available

Example) 5.85~6.15 Voltage is recognized as 6.0V.

CAUTION

If you want to control the Room Temperature using Remote controller, you have to be off the Dip S/W 4 and Dip S/W 6, and setting the Rotary S/W to the ‘0’ .

AHU KIT WIRING CONFIGURATION WITH DDC

Configuration concept

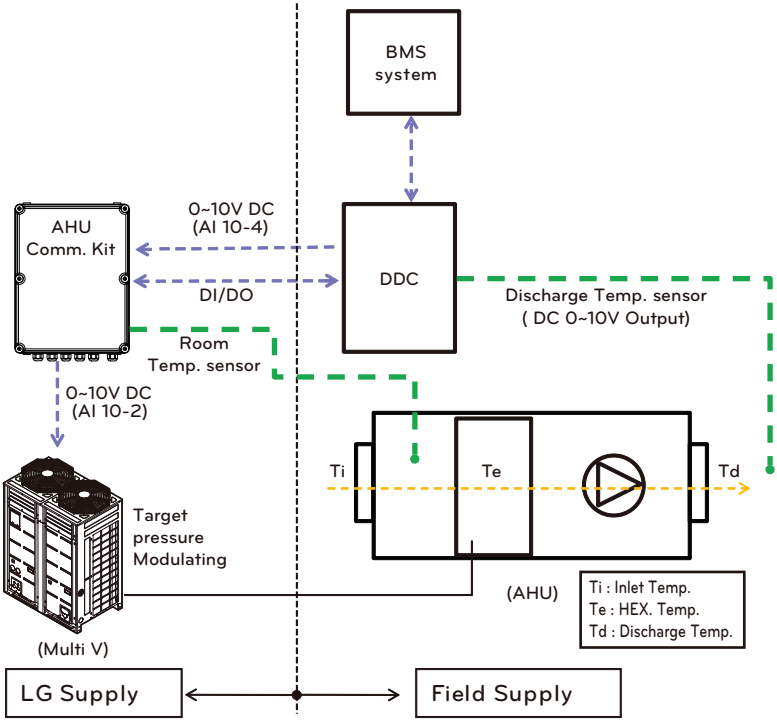

1 Comm. Kit control capacity of the cooling/heating only according to the DDC's control signal (DC 0~10V)

2 Control signal from the DDC is decided by calculation logic with Td/Ti and setting temperature (Calculation logic depends on BMS program).

3 For Installation of Room thermistor, recommended to be installed to the inlet of Heat Exchanger.

DI Wring concept

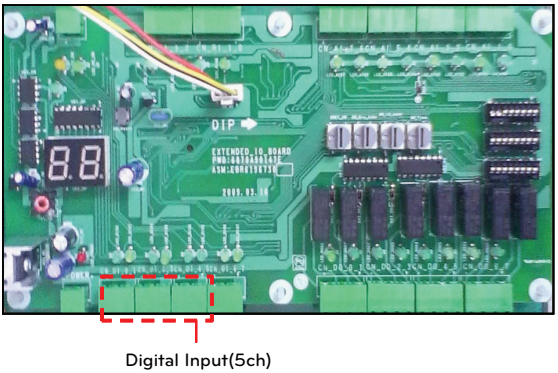

DI Specification
: Non-Voltage Contact

Wiring No.	Input		Logic	Conditions
	Open	Short		
DI 01-3	Operation Off	Operation On	-. When short, the fan signal (FAN) is On and ODU will start to run. -. When open, ODU will off and FAN changes to Off.	-. Operation mode : DI 23-3/23-2 -. Fan mode : DI 45-3/45-2
DI 23-3	FAN Operation	Cooling or Heating	-. When open, FAN is On but ODU will not run. -. When short, FAN is On and mode is decided DI 23-2. -. If no more cooling and heating is necessary, DI 23-3 is open and DI 01-3 is On.	-. DI 01-3 : short
DI 23-2	Cooling Operation	Heating Operation	-. When open, mode is cooling -. When short, mode is heating	-. DI 01-3 : short -. DI 23-3 : short
DI 45-3	Low FAN	Mid FAN	-. When DI 45-3/45-2 are open : Low fan mode and FAN is On. -. When DI 45-3 is short : Mid fan and FAN is On.	-. DI 01-3 : short -. Operation mode : DI 23-3/23-2
DI 45-2		High FAN	-. When DI 45-2 short : High fan and FAN is On. -. When DI 01-3 is open : FAN is Off, DI 45-3,/45-2 are neglected.	

NOTE

Fan signal (FAN) can be delayed on heating mode start up despite of fan mode (DI 45-3/45-2) because fan signal (FAN) will be On , if temperature of refrigerant pipe sensors (PIPE_IN, PIPE_Out) are higher than 20°C to prevent cold air discharge.

DO Wring concept

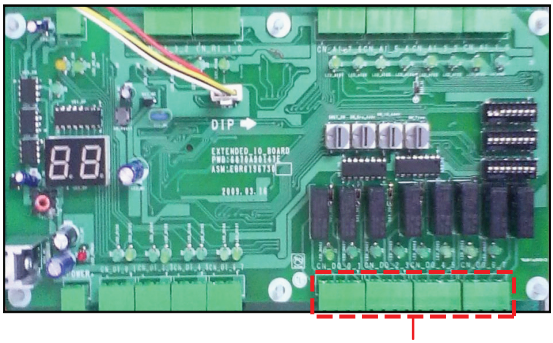

DO Specification
: AC 250V, DC 30V, 1A

Wiring No.	Output		Logic
	Open	Short	
DO 01-4	Operation On	Operation Off	-. When DI 01-3 is short, ODU and FAN are On. -. When DI 01-3 is open, ODU and FAN are Off.
DO 01-2	Compressor is Off	Compressor is On	-. When ODU compressor is running, it is short. -. When ODU compressor is off, it is open
DO 23-4	Cooling / Heating Defrosting / FAN		-. When DO 23-4 / 23-2 are open, it is ventilation mode. -. When DO 23-4 is open, DO 23-2 is short, it is defrosting during heating. FAN can be OFF if PIPE_IN and PIPE_OUT are less than 20°C. -. When DO 23-4 is short, DO 23-2 is open, it is cooling. -. When DO 23-4 is short, DO 23-2 is short, it is heating -. Defrosting mode only works when it is connected with ODU.
DO 23-2			
DO 45-4	Low FAN	Mid FAN	-. When DO 45-4 / DO 45-2 are open, it is low fan mode. -. When DO 45-4 is short and DO 45-2 is open , it is mid fan mode.
DO 45-2		High FAN	-. When DO 45-2 is short, it is high fan mode (DO 45-4 is neglected).
DO 67-4	No Error	Error Occurred	-. When DO 67-4 is short, ODU has error and ODU stops FAN is Off.

NOTE

If AHU should have High/Mid/Low fan mode, Fan control in AHU should utilize DO 45-4 /45-2 (Non-Voltage Contact).

AI Wring concept

AI Specification : DC 0~10V

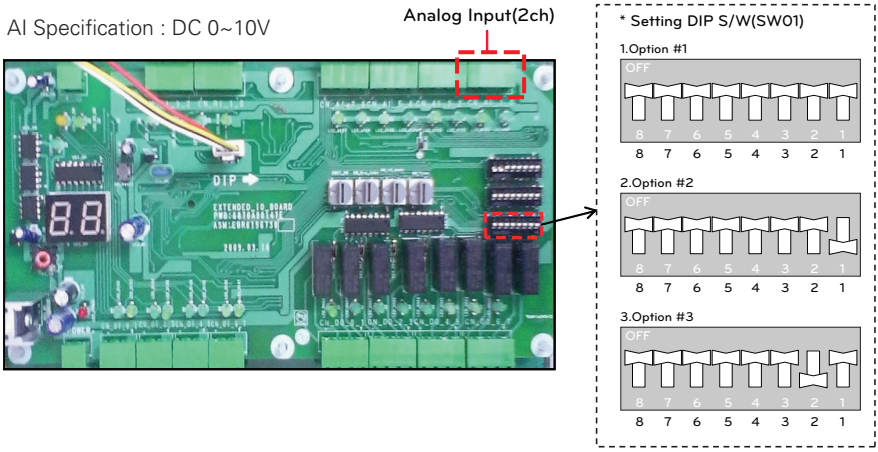

Discharge Temperature Control through controlling of ODU capacity

1. Option #1

AI No.	Input voltage [Vdc]	Low [Vdc]	High [Vdc]	Capacity of unit [%]	Cooling		Heating		Control
					Target Low Pressure [kPa]	Tempera-ture at HEX [°C]	Target High Pressure [kPa]	Tempera-ture at HEX [°C]	
AI 10-2	0	0	0.4	No limit	-	-	-	-	DI should be decided.
	1	0.6	1.4	100	800	10.5	3,000	49.2	DI will determine fan mode and operation mode.
	2	1.6	2.4	90	830	11.3	2,990	49.0	
	3	2.6	3.4	80	870	12.5	2,730	45.1	
	4	3.6	4.4	70	930	14	2,560	42.5	
	5	4.6	5.4	60	990	15.8	2,340	38.9	
	6	5.6	6.4	50	1,070	17.9	2,080	34.1	
	7	6.6	7.4	45	1,100	19	1,950	31.5	
	8	7.6	8.4	40	1,160	20.3	1,800	28.4	
	9	8.6	9.4	Comp. off	-	-	-	-	If it is 9V, DO 01-4 is short, DO 01-2 is open.
	10	9.6	10	All off	-	-	-	-	ODU and fan are Off.

2. Option #2

AI No.	Input voltage [Vdc]	Low [Vdc]	High [Vdc]	Capacity of unit [%]	Cooling		Heating		Control
					Target Low Pressure [kPa]	Tempera-ture at HEX [°C]	Target High Pressure [kPa]	Tempera-ture at HEX [°C]	
AI 10-2	0	0	0.4	Comp. off	-	-	-	-	DO 01-4 is short, DO 01-2 is open.
	1	0.6	1.4	40	1160	20.3	1800	28.4	DI will determine fan mode and opeation mode
	2	1.6	2.4	45	1100	19.0	1950	31.5	
	3	2.6	3.4	50	1070	17.9	2080	34.1	
	4	3.6	4.4	60	990	15.8	2340	38.9	
	5	4.6	5.4	70	930	14.0	2560	42.5	
	6	5.6	6.4	80	870	12.5	2730	45.1	
	7	6.6	7.4	90	830	11.3	2990	49.0	
	8	7.6	8.4	100	800	10.5	3000	49.2	
	9	8.6	9.4	100	800	10.5	3000	49.2	
	10	9.6	10	100	800	10.5	3000	49.2	

3. Option #3

AI No.	Input voltage [Vdc]	Low [Vdc]	High [Vdc]	Capacity of unit [%]	Cooling		Heating		Control
					Target Low Pressure [kPa]	Tempera-ture at HEX [°C]	Target High Pressure [kPa]	Tempera-ture at HEX [°C]	
AI 10-2	0	0	0.4	Comp. off	-	-	-	-	DO 01-4 is short, DO 01-2 is open.
	1	0.6	1.4	Comp. off	-	-	-	-	
	2	1.6	2.4	40	1,160	20.3	1,800	28.4	DI will determine fan mode and opeation mode
	3	2.6	3.4	45	1,100	19.0	1,950	31.5	
	4	3.6	4.4	50	1,070	17.9	2,080	34.1	
	5	4.6	5.4	60	990	15.8	2,340	38.9	
	6	5.6	6.4	70	930	14.0	2,560	42.5	
	7	6.6	7.4	80	870	12.5	2,730	45.1	
	8	7.6	8.4	90	830	11.3	2,990	49.0	
	9	8.6	9.4	100	800	10.5	3,000	49.2	
	10	9.6	10	100	800	10.5	3,000	49.2	

FAN Signal Wiring Concept

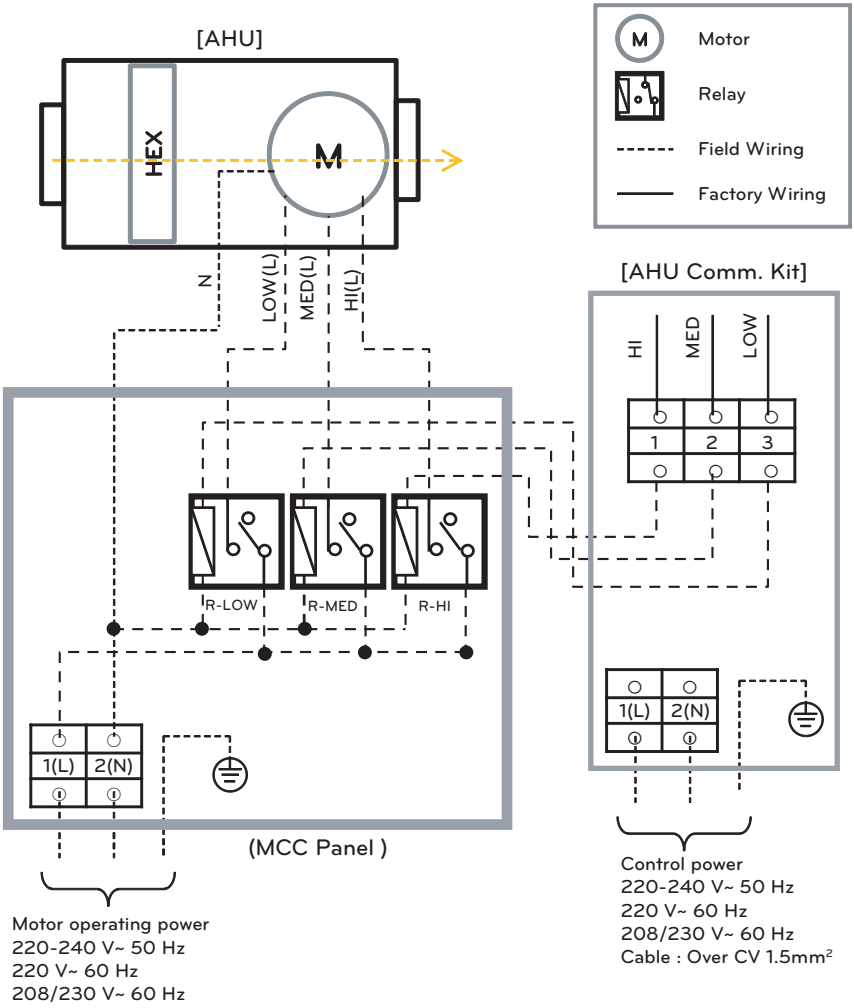

❊ If the motor is On/Off type, HI/MED/LOW wire have to connect as common.
For example, If you just connect HI wire to the motor(On/Off), motor is not operating according to our control logic.

THERMISTORS INSTALLATION

Pipe thermistors Installation

Location of the pipe thermistors

A correct installation of the thermistors is required to ensure a good operation :

1 Pipe_In(EBG61287703)
: Install the thermistor behind the distributor on the coldest pass the heat exchanger (contact your heat exchanger dealer).

2 Pipe_Out(EBG61287704)
: Install the thermistor at the outlet of the heat exchanger as close as possible to the heat exchanger.

Evaluation must be done to check if the evaporator is protected against freeze-up.
Execute test operation and check for freeze-up.

1 Pipe_In(Suction pipe)

2 Pipe_Out(Discharge pipe)

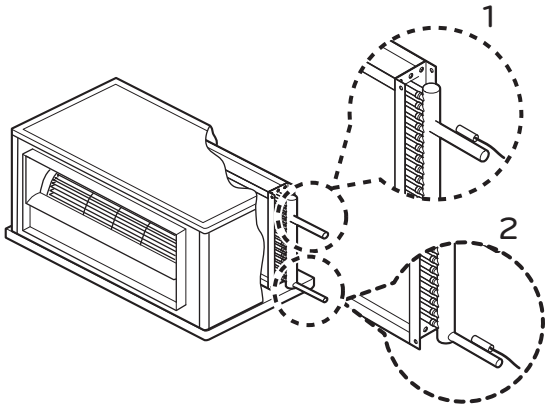

(Air Handling Unit)

Installation of the pipe thermistor cable

1 Put the thermistor cable in a separate protective tube.

2 Always add a pull-relief to the thermistor cable to avoid strain on the thermistor cable and loosening of the thermistor. Strain on the thermistor cable or loosening of the thermistor may result in bad contact and incorrect temperature measurement.

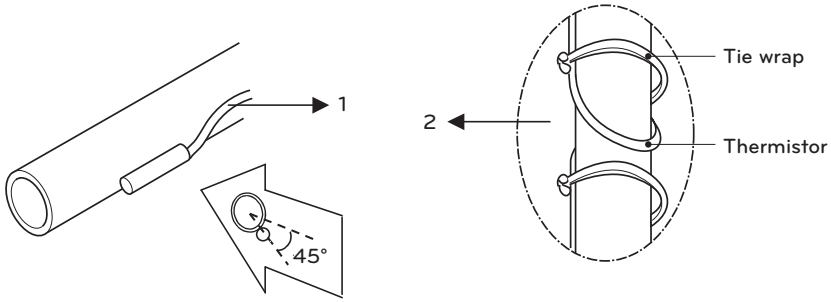

Fixation of the pipe thermistors (Field work)

1 Fix the thermistor with insulating aluminum tape (Field supply) in order to ensure a good heat transfer.

2 Put the supplied piece of rubber around the thermistor (EBG61287703/04) in order to avoid loosening of the thermistor after some years.

3 Fasten the thermistor with 2 tie wraps (Field Supply)

4 Insulate the thermistor with insulation sheet(Over 5t, Field Supply)

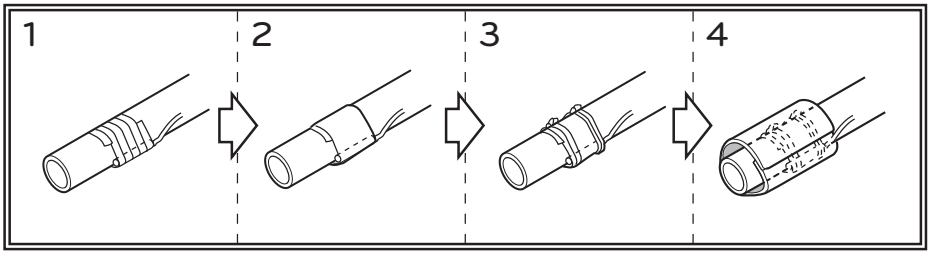

INSTRUCTION

- Put the thermistor wire slightly top to above water accumulation on down of the thermistor.

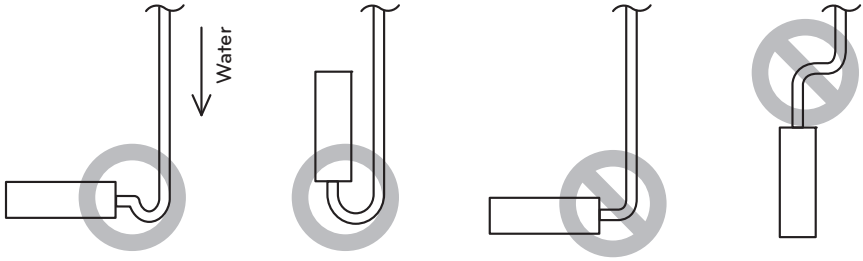

- For sensing the evaporator's temp. in thermistor, Put the upper port the thermistors on the evaporator, this is the most sensitive point of the thermistor.

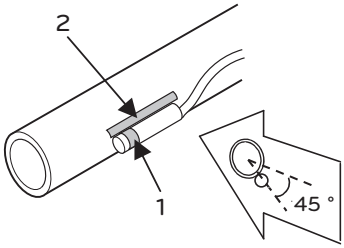

1 Most sensitive point of the thermistor
2 Maximize the contact

TROUBLESHOOTING

Problem	Cause	Remedy
AHU Communication Kit does not work	No power supply	Check the electrical connection and voltage of the power supply.
	Wiring is wrong	Check the electrical connection of the Communication Kit (Refer to the circuit diagram of the Communication Kit)
	AHU Communication Kit is broken	Check the electrical and mechanical part.

[Error Code]

Display Number		Error Item	Cause of Error
CH	01	Room Temperature	Temperature sensor disconnection or short circuit on Room or RA of AHU
CH	02	Pipe In Temperature sensor error	Temperature sensor disconnection or short circuit on pipe inlet of AHU
CH	03	Communication error between wired remote controller and Comm. Kit	No communication signal for more than 3 minutes from wired remote controller to the Comm. Kit
CH	05	Communication error between Comm. Kit and Outdoor Unit	No communication signal for 5 minutes continuously from Comm. Kit to Outdoor Unit
CH	06	Pipe Out Temperature sensor error	Temperature sensor disconnection or short circuit on pipe outlet of AHU
CH	09	Option PCB EEPROM error	No reading signal for 5 times continuously from EEPROM to Comm. Kit

LG

Life's Good