LG PRIVILEGE

website: **http://www.lgservice.com**
e-mail: **http://www.lgeservice.com/techsup.html**

MICROWAVE OVEN

OWNER'S MANUAL

PLEASE READ THIS OWNER'S MANUAL
THOROUGHLY BEFORE OPERATING.

MV-1865S
MV-1866S
MV-1891SJ

P/NO. 3828W5A2024
Printed in Korea

TABLE OF CONTENTS

TABLE OF CONTENTS **2**

SAFETY **3**
- Important Safety Instructions 3
- Precautions To Avoid Possible Exposure To Excessive Microwave Energy 4

INFORMATION **5**
- Location of Model Number 5
- Oven Specifications 5
- Electrical Rating 5
- Electrical Requirements 5
- Grounding Instructions 5
- Microwave Oven Features 6
- Oven Control Panel 7

OPERATION **9**
- **LEARN ABOUT YOUR MICROWAVE OVEN** **9**
  - Clock 9
  - Kitchen Timer 9
  - Light Timer 9
  - FAN Hi/Lo/Off 10
  - LIGHT Hi/Lo/Off 10
  - TURNTABLE On/Off 10
  - Child Lock 10
  - Help 10
  - Hold Warm 10
  - Custom Set 11
  - Ez On 11
  - Custom Cook 11
  - More / Less 12
  - Cooking at High Cook Power 12
  - Cooking at Lower Power Levels 12
  - Cooking Guide for "Lower Power Levels" 13
- **SENSOR OPERATING INSTRUCTIONS** **14**
  - Sensor Cooking Guide 14
  - Adding or Subtracting Cook time 15
  - Popcorn 15
  - Vegetable 15
  - Pizza 15
  - Potato 16
  - Cook 16
  - Reheat 16
- **AUTO DEFROST** **17**
- **AUTO DEFROST CHART** **18**
- **USE OF THE TWO POSITION METAL RACK** ... **20**

MAINTENANCE **21**
- **CARE AND CLEANING** **21**
  - Metal Rack 21
  - Cleaning the Grease Filters 21
  - Charcoal Filter(Optional) Replacement 21
  - Cooktop/Night Light Replacement 22
  - Oven Light Replacement 22
- **QUESTIONS AND ANSWERS** **22**
- **MICROWAVE UTENSIL GUIDE** **23**

BEFORE CALLING FOR SERVICE **24**

SAFETY

IMPORTANT SAFETY INSTRUCTIONS

The safety instructions below will tell you how to use your oven to avoid harm to yourself or damage to your oven.

WARNING-To reduce the risk of burns, electric shock, fire, injury to persons or exposure to excessive microwave energy.

- **Read all the instructions before using your oven.**
- **Do not allow children to use this oven without close supervision.**
- Read and follow the specific **"PRECAUTIONS TO AVOID POSSIBLE EXPOSURE TO EXCESSIVE MICROWAVE ENERGY"** found on page 4.
- Use the microwave oven only for its intended use as described in its manual. **Do not use** corrosive chemicals or vapors, in the microwave oven. This type of oven is specifically designed to heat, cook or dry food. It is not designed for industrial or laboratory use.
- **Do not use or store** this appliance outdoors. Do not use this product near water -for example, near a kitchen sink, in a wet basement, or near a swimming pool, and the like.
- **Do not use** the cavity for storage purposes. Do not leave paper products, cooking utensils, or food in the cavity when not in use.
- **Clean the ventilating hood frequently.** Do not allow grease to accumulate on the hood or the filters.
- When flaming foods under the hood, turn the fan on.
- Suitable for use above both gas and electric cooking equipment 36 inches wide or less.
- Use care when cleaning the vent hood filters. Corrosive cleaning agents such as lye-based oven cleaners, may damage the filters.
- **When cleaning the door and the surfaces that touch the door, use only mild, non-abrasive soaps or detergents and a sponge or soft cloth.**
- **Do not tamper with the built-in safety switches on the oven door.** The oven has several built-in safety switches to make sure the power is off when the door is open.
- **If your oven is dropped or damaged,** have it thoroughly checked by a qualified service technician before using it again.
- **To avoid a fire hazard:**
  - **Do not severely overcook food.** Severely overcooked foods can starts a fire in the oven. Watch the oven carefully, especially if you have paper, plastic, or other combustibles in the oven.
  - **Do not store combustible items (bread, cookies, etc.) in the oven,** because if lightning strikes the power lines, it may cause the oven to turn on.
  - **Do not use wire twist-ties in the oven**. Be sure to remove them before placing the item in the oven.
- **If a fire should start:**
  - **Keep the oven door closed.**
  - **Turn the oven off.**
  - **Disconnect the power cord or shut off the power at the fuse or circuit breaker panel.**
- **To avoid electric shock:**
  - **This appliance must be grounded.** Connect it only to a properly grounded outlet. See the electrical grounding instructions on page 5.
  - **Do not operate this appliance if it has a damaged cord or plug,** if it is not working properly or if it has been damaged or dropped.
  - **Do not immerse the electrical cord or plug in water.**
  - **Keep the cord away from heated surfaces.**
  - This appliance should be serviced only by qualified service personnel.
- Install or locate the microwave oven only in accordance with the provided installation instructions.
- Do not mount oven a sink.
- Do not let cord hang over edge of table or counter.

SAFETY

- **To avoid improperly cooking some foods.**
  - **Do not heat any types of baby bottles or baby food.** Uneven heating may occur and possibly cause personal injury.
  - **Do not heat small-necked containers,** such as syrup bottles.
  - **Do not deep-fat fry in your microwave oven.**
  - **Do not attempt home canning in your microwave oven.**
  - **Do not heat the following items in the microwave oven:** whole eggs in the shell; water with oil or fat; sealed containers or closed glass jars. These items may explode.
- **Do not use this oven for commercial purposes.** It is made for household use only.
- Do not cover or block any openings in the oven.
- Do not run the oven empty, without food in it.
  - **Do not** allow the gray film on special microwave-cooking packages to touch the oven floor. Put the package on a microwavable dish.
  - **Do not** cook anything directly on the oven floor. Use a microwavable dish.
  - Keep a browning dish at least 3/16 inch above floor. Carefully read and follow the instructions for the browning dish. If you use a browning dish incorrectly, you could damage the oven floor.
- **Preserve the metal rack:**
  - Remove the metal rack from the oven when you are not using it.
  - **Do not** use the oven empty with the metal rack in it.
  - The metal rack may get hot while cooking. Use pot holders to remove it after cooking.
  - **Do not** use foil or metal containers on the metal rack.
- This appliance should be serviced only by qualified service personnel. Contact nearest authorized service facility for examination, repair or adjustment.

SAVE THESE INSTRUCTIONS

PRECAUTIONS TO AVOID POSSIBLE EXPOSURE TO EXCESSIVE MICROWAVE ENERGY ...

- **Do not attempt to operate this oven with the door open,** since open-door operation can result in harmful exposure to microwave energy. It is important not to defeat or tamper with the safety interlock.
- **Do not operate the oven if it is damaged.** It is particularly important that the oven door close properly and that there is no damage to the:
  - door (bent)
  - hinges and latches (broken or loosened)
  - door seals and sealing surfaces.
- **Do not place any object between the oven front face and the door,** or allow soil or cleaner residue to accumulate on sealing surfaces.
- **The oven should not be adjusted or repaired** by anyone except properly qualified service personnel.

INFORMATION

Please read this owner's manual. It will tell you how to use all the fine features of this microwave oven.

LOCATION OF MODEL NUMBER

To request service information or replacement parts, LG Electronics CANADA will require the complete model number of your microwave oven. The number is on the left side of control panel as shown in the illustration below.

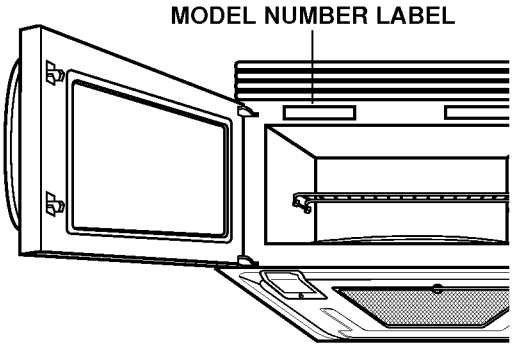

OVEN SPECIFICATIONS

Output Power 1000W (IEC 60705 Standard)
Outer Dimensions 29-15/16" x 16-7/16" x 15-5/8"
Cavity Volume 1.8 Cu.ft
Net Weight 60 lbs.

ELECTRICAL RATING

* Electrical Rating of the Oven:120V AC 60Hz
* 13 Amps / 1500 Watts (MWO + Cooktop Lamp + Ventilation Fan)

ELECTRICAL REQUIREMENTS

The oven is designed to operate on a Standard 120V/60Hz household outlet. Be sure the circuit is at least 15A or 20A and the microwave oven is the **only appliance on the circuit.** It is not designed for 50Hz or any circuit other than a 120V/60Hz circuit.

GROUNDING INSTRUCTIONS

This appliance must be grounded. If an electrical short circuit occurs, grounding reduces the risk of electric shock by providing an escape wire for the electric current. The cord for this appliance has a grounding wire with a grounding plug. Put the plug into an outlet that is properly installed and grounded.

WARNING - If you use the grounding plug improperly, you risk electric shock.

Ask a qualified electrician if you do not understand the grounding instructions or if you wonder whether the appliance is properly grounded.
Because this appliance fits under the cabinet, it has a short power-supply cord. See the separate Installation Instructions for directions on properly placing the cord. Keep the electrical power cord dry and do not pinch or crush it in any way.

If it is necessary to use an extension cord, use only a 3-wire extension cord that has a 3-blade grounding plug, and a 3-slot receptacle that will accept the plug on the appliance. The marked rating of the extension cord shall be equal to or greater than the electrical rating of the appliance.

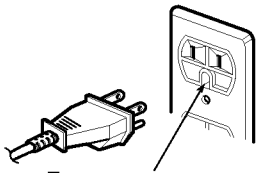

For a permanently connected appliance:
This appliance must be connected to a grounded, metallic, permanent wiring system, or an equipment grounding conductor should be run with the circuit conductors and connected to the equipment grounding terminal or lead on the appliance.

INFORMATION

MICROWAVE OVEN FEATURES

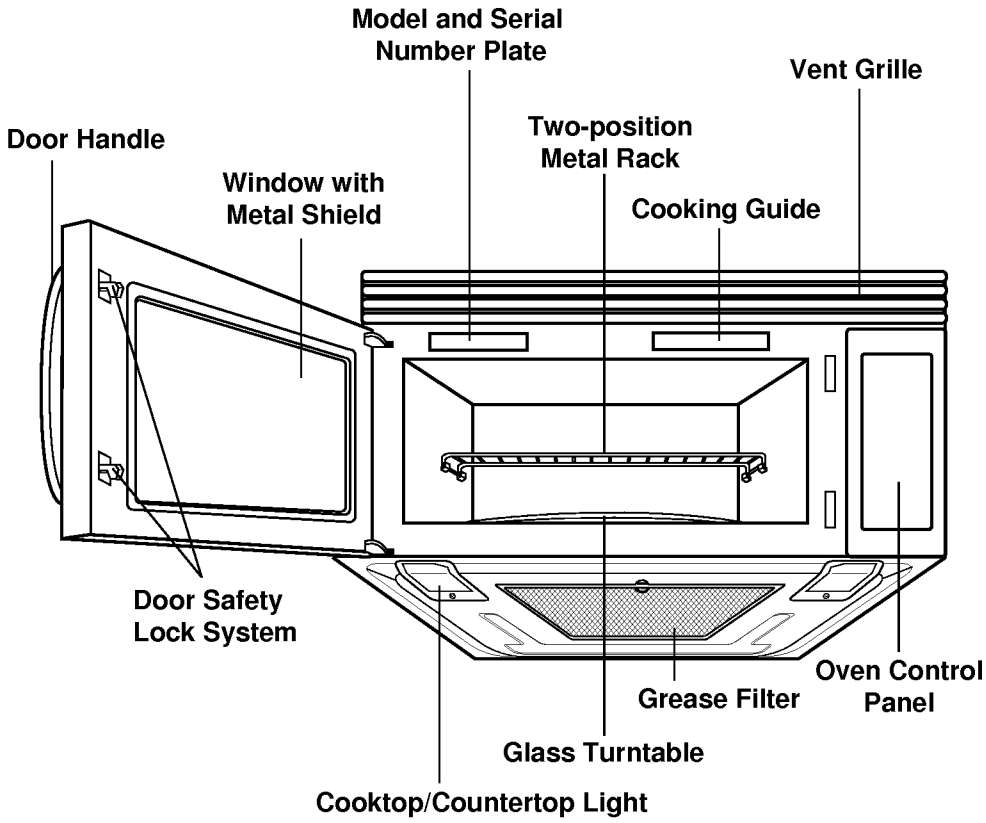

OVEN CONTROL PANEL

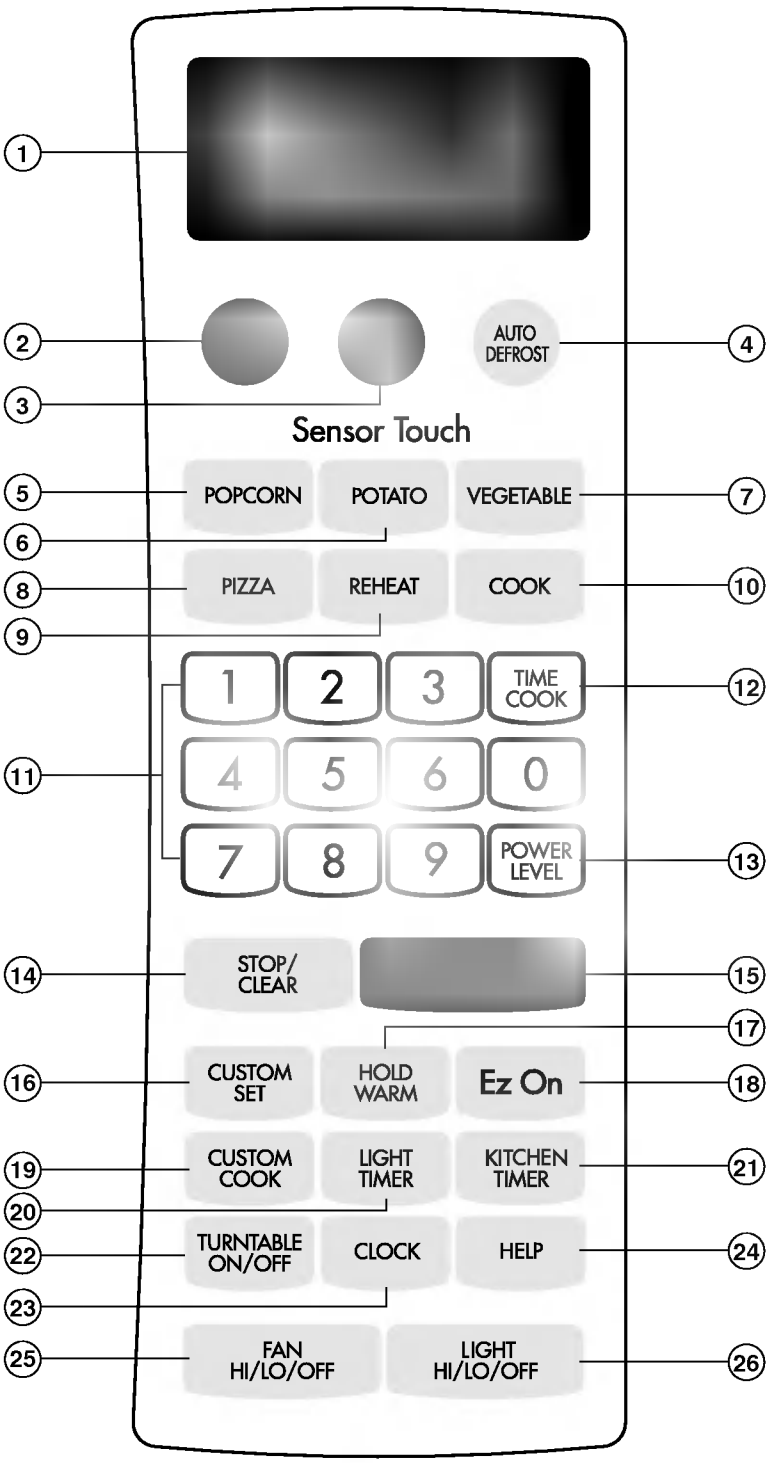

INFORMATION

1. **DISPLAY:** The Display includes a clock and indicators to tell you time of day, cooking time settings and cooking functions selected.

2. **MORE:** Touch this pad to add ten seconds of cooking time each time you press it.

3. **LESS:** Touch this pad to subtract ten seconds of cooking time each time you press.

4. **AUTO DEFROST:** Meat, poultry, fish. Touch on pad to select food type and defrost food by weight.

5. **POPCORN:** Touch this pad when popping popcorn in your microwave oven. The oven's sensor will tell the oven how long to cook depending on the amount of humidity it detects from the popcorn.

6. **POTATO:** Touch this pad to cook potatoes. The oven's sensor will tell the oven how long to cook depending on the amount of humidity it detects from the potato.

7. **VEGETABLE:** Touch this pad to reheat vegetables. The oven's sensor will tell the oven how long to cook depending on the amount of humidity it detects from the vegetables.

8. **PIZZA:** Touch this pad to cook pizza without selecting cooking times and power levels.

9. **REHEAT:** Touch this pad to reheat casserole, dinner plate, and soup/sauce. The oven's sensor will tell the oven how long to cook depending on the amount of humidity it detects from the popcorn.

10. **COOK:** Touch this pad to cook frozen entree, casserole, and rice. The oven's sensor will tell the oven how long to cook depending on the amount of humidity it detects from the popcorn.

11. **NUMBER:** Touch number pads to enter cooking time, power level, quantities or weights.

12. **TIME COOK:** Touch this pad to set a cooking time.

13. **POWER LEVEL:** Touch this pad to select a cooking power level.

14. **STOP/CLEAR:** Touch this pad to stop the oven or clear all entries.

15. **START:** Touch this pad to start a function. If you open the door after oven begins to cook, retouch START.

16. **CUSTOM SET:** Touch this pad to change the oven's default settings for sound, clock, display speed, defrost weight, and demo mode operations.

17. **HOLD WARM:** Touch this pad to keep hot, cooked foods safety warm in your microwave oven for up to 99 minutes 99 seconds.

18. **EZ ON:** Touch this pad to set and start quickly at 100% power level.

19. **CUSTOM COOK:** Touch this pad to recall one cooking instruction previously programmed into memory.

20. **LIGHT TIMER:** Touch this pad to set the light timer.

21. **KITCHEN TIMER:** Touch this pad to set the kitchen timer.

22. **TURNTABLE ON/OFF:** Touch this pad to turn off the turntable. "OFF" will appear in the display.

23. **CLOCK:** Touch this pad to enter the time of day.

24. **HELP:** Touch this pad to learn how to use each oven function.

25. **FAN HI/LO/OFF:** Touch this pad to turn the fan on or off.

26. **LIGHT HI/LO/OFF:** Touch this pad to turn on the cooktop/countertop light.

LEARN ABOUT YOUR MICROWAVE OVEN

This section discusses the concepts behind microwave cooking and introduces you to the basics you need to know to operate your microwave oven. Please read this information before use.

CLOCK

This oven includes a 24 hour clock.

Example: To set 8:00 AM.



1. Touch **STOP/CLEAR.**



2. Touch **CLOCK.**
(Press once for AM, twice for PM.)



3. Enter the time by using the number key pad.



4. Touch **CLOCK.**
(or **START**)

KITCHEN TIMER

You can use your microwave oven as a timer. Use the Timer for timing up to 99 minutes, 99 seconds.

Example: To count 3 minutes.



1. Touch **STOP/CLEAR.**



2. Touch **KITCHEN TIMER.**



3. Enter the time by using the number key pad.



4. Touch **START.**
When the time is over, you will hear seven beeps and **END** will display.

LIGHT TIMER

You can set the LIGHT to turn on and off automatically at any time you want. The light comes on at the same time every day until reset.

Example: Turn on 2:00 AM, turn off 7:00 AM.



1. Touch **STOP/CLEAR.**



2. Touch **LIGHT TIMER.**
(Press once for AM, twice for PM.)



3. Enter the time you want the LIGHT to turn on.



4. Touch **LIGHT TIMER** again.
(Press once for AM, twice for PM.)



5. Enter the time you want the LIGHT to turn off.



6. Touch **START.**

NOTE: To reset that time to turn on and off the LIGHT, repeat steps 2 to 6.

Example: To cancel the LIGHT TIMER.



1. Touch **LIGHT TIMER.**



2. Touch **STOP/CLEAR.**

NOTE: If you want to cancel the LIGHT TIMER in operation, you should touch

key.

FAN HI / LO / OFF

FAN HI/LO/OFF

The FAN moves steam and other vapors from the surface cooking. Touch FAN HI/LO/OFF once for High fan speed, twice for Low fan speed, or a three times to turn the fan off.

NOTE: If the temperature gets too hot around the microwave oven, the fan in the vent hood will automatically turn on at the LOW setting to cool the oven. It may stay on up to an hour to cool the oven. When this occurs, **you can not turn the fan off manually.**

LIGHT HI / LOW / OFF

LIGHT HI/LO/OFF

Touch LIGHT HI/LO/OFF once for bright light, twice for the night light or three times to turn the light off.

TURNTABLE ON / OFF

TURNTABLE ON/OFF

For best cooking results, leave the turntable on. It can be turned off for large dishes. Press TURNTABLE ON/OFF to turn the turntable on or off.

NOTE: • **Sometimes the turntable can become hot to touch.** Be careful touching the turntable during and after cooking.
• **Do not run the empty without food in it.**

CHILD LOCK

You may lock the control panel to prevent the microwave from being accidentally started or used by children.

Example: To set the child lock.

STOP/ CLEAR

1. Touch **STOP/CLEAR.**

0

2. Touch and hold **0** more than 4 seconds. **LOCKED** will appear in the display window with two beeps.

Example: To cancel the child lock.

0

1. Touch and hold **0** more than 4 seconds. **LOCKED** will disappear and you hear two beeps. At this time the oven is ready.

HELP

The HELP pad display feature information and helpful hints. Press HELP, then select a key pad.

Example: To learn about POPCORN.

STOP/ CLEAR

1. Touch **STOP/CLEAR.**

HELP

2. Touch **HELP.**

POPCORN

3. Touch **POPCORN.**

HOLD WARM

You can safely keep hot, cooked food warm in your microwave oven for up to 99 minutes 99 seconds. You can use HOLD WARM by itself, or to automatically follow a cooking cycle.

Example: To use the hold warm.

STOP/ CLEAR

1. Touch **STOP/CLEAR.**

HOLD WARM

2. Touch **HOLD WARM.**



3. Touch **START.**

NOTES:
- HOLD WARM operates for up to 99 minutes 99 seconds.
- Food cooked covered should be covered during HOLD WARM.
- Pastry items (pies, turnovers, etc.) should be uncovered during HOLD WARM.
- Complete meals kept warm on a dinner plate could be covered during HOLD WARM.

To make HOLD WARM automatically follow another cycle:
- While you are programming the cooking instructions, touch HOLD WARM before touching START.
- When the last cooking cycle is over, you will hear two tones and "WARM" will appear in the oven display.
- You can set HOLD WARM to follow AUTO DEFROST, or multi-cycle cooking.

CUSTOM SET

You can change the default values for beep sound, clock, display speed, defrost weight, and demo mode operations.
See following chart for more information.

NUMBER	CUSTOM SET	NUMBER	RESULT
1	Sound ON/OFF control	1	Sound ON
		2	Sound OFF
2	Clock display control	1	Clock ON
		2	Clock OFF
3	Display	1	Slow speed
		2	Normal speed
		3	Fast speed
4	Defrost weight mode select	1	Lbs
		2	Kg
5	Demo mode select	1	Demo ON
		2	Demo OFF

Example: To change defrost weight mode. (from lbs to kg)



1. Touch **STOP/CLEAR.**



2. Touch **CUSTOM SET.**



3. Touch number **4.**



4. Touch number **2.**

Ez On

A time-saving pad, this simplified control lets you quickly set and start microwave cooking without the need to touch **START**.

Example: To set Ez On for 2 minutes.



Touch **Ez On**
4 times.
The oven begins cooking and display shows time counting down.

NOTE:
If you touch **Ez On**, it will add 30 seconds up to 3 minutes ; after 3 minutes every touch will add 1 minutes up to 99 min 59 seconds.

CUSTOM COOK

CUSTOM COOK lets you to recall one cooking instruction previously placed in memory and begin cooking quickly.

Example: To memorize for 2 minutes.



1. Touch **STOP/CLEAR.**



2. Touch **CUSTOM COOK.**



3. Enter the cook time.



4. Touch **START.**

Example: To recall the memory.



1. Touch **STOP/CLEAR.**



2. Touch **CUSTOM COOK.**



3. Touch **START.**
When the cook time is over, you will hear four beeps and **END** will display.

MORE / LESS

By using the MORE or LESS Keys, all of the pre-programmed cook and time cook and etc. can be adjusted to cook food for a longer or shorter time.

Pressing MORE will add 10 seconds of the cooking time each time you press it. Pressing LESS will subtract 10 seconds of cooking time each time you press it.

COOKING AT HIGH COOK POWER

Example: To cook food for 8 minutes 30 seconds.



1. Touch **STOP/CLEAR.**



2. Enter the cook time.



3. Touch **START.**
When the cook time is over, you will hear four beeps and **END** will display.

COOKING AT LOWER POWER LEVELS

HIGH power cooking does not always give you the best results with foods that need slower cooking, such as roasts, baked goods, or custards. Your oven has 9 power settings in addition to "HIGH".

Example: To cook food for 7 minutes 30 seconds at 70% power.



1. Touch **STOP/CLEAR.**



2. Enter the cook time.



3. Touch **POWER LEVEL.**



4. Enter the power level.



5. Touch **START.**
When the cook time is over, you will hear four beeps and **END** will display.

OPERATION

COOKING GUIDE FOR "LOWER POWER LEVELS"

The nine power levels in addition to "HIGH" allow you to choose the best power level for the food you are cooking. Below are listed all the power levels, examples of foods best cooked at each level, and the amount of microwave power you are using.

POWER LEVEL	MICROWAVE OUTPUT	USE
10 "HIGH"	100%	• Boil water. • Cook ground beef. • Make candy. • Cook fresh fruits and vegetables. • Cook fish, and poultry. • Preheat browning dish.
9	90%	• Reheat meat slices quickly. • Saute onions, celery, and green pepper.
8	80%	• All reheating. • Cook scrambled eggs.
7	70%	• Cook breads and cereal products. • Cook cheese dishes,veal. • Cook cakes,muffins,brownies,cup cakes.
6	60%	• Cook pasta.
5	50%	• Cook meats,whole poultry. • Cook custard. • Cook whole chicken,turkey,spare ribs,rib roast,sirloin roast.
4	40%	• Cook less tender cuts of meat. • Reheat frozen convenience foods.
3	30%	• Thawing meat,poultry,and seafood. • Cooking small quantities of food. • Finish cooking casserole,stew,and some sauces.
2	20%	• Soften butter and cream cheese. • Heating small amounts of food.
1	10%	• Soften ice cream. • Raise yeast dough.
0		• Standing time.

OPERATION

SENSOR OPERATING INSTRUCTIONS

Sensor Cook allows you to cook most of your favorite foods without selecting cooking times and power levels. The display will indicate "SENSING" during the initial sensing period. The oven automatically determines required cooking time for each food item. When the internal sensor detects a certain amount of humidity coming from the food, it will tell the oven how much longer to heat. The display will show the remaining heating time. For best results by Sensor, following these recommendation.

1. Food cooked with the sensor system should be at normal storage temperature.

2. Glass Tray and outside of container should be dry to assure best cooking results.

3. Foods should always be covered loosely with microwavable plastic wrap, waxed paper or a lid.

4. Do not open the door or touch the "STOP/CLEAR" key during the sensing time. When sensing time is over, the oven beeps twice and the remaining cooking time will appear in the display window. At this time you can open the door to stir, turn or rearrange the food.

SENSOR COOKING GUIDE

Appropriate containers and coverings help assure good Sensor cooking results.

1. Always use microwavable containers and cover them with lids or vented plastic wrap.

2. Never use tight-sealing plastic covers. They can prevent steam from escaping and cause food to overcook.

3. Match the amount of the size of the container. Fill containers at least half full for best results.

4. Be sure the outside of the cooking container and the inside of the microwave oven are dry before placing food in the oven. Beads of moisture turing into steam can mislead the sensor.

ADDING OR SUBTRACTING COOK TIME

If the SENSOR function is too long or too short, you can increase or decrease the cook time by 10% after choosing the function. You can only increase or decrease cook time before cooking starts.

Example: If you want to adjust the Sensor Cook (casserole) cooking time for longer time.

STOP/ CLEAR — 1. Touch **STOP/CLEAR.**

COOK — 2. Touch **COOK.**

2 — 3. Choose food category.

9 — 4. Touch number **9.**

Cook time	Touch pad number
Less	7
Normal	8
More	9

POPCORN

POPCORN lets you pop commercially packaged microwave popcorn. Pop only one package at a time. For best results, use fresh bags of popcorn.

Example: To pop 3.5 oz.

STOP/ CLEAR — 1. Touch **STOP/CLEAR.**

POPCORN — 2. Touch **POPCORN.**
When the cook time is over, you will hear four beeps and **END** will display.

CAUTION: Do not leave microwave unattended while popcorn.

VEGETABLE

VEGETABLE has preset cook powers for 3 food categories: **Fresh, Frozen, and Canned.**

Example: To reheat Frozen Vegetable.

STOP/ CLEAR — 1. Touch **STOP/CLEAR.**

BEVERAGE — 2. Touch **VEGETABLE.**

2 — 3. Choose food category.

Category	Touch pad number
Fresh	1
Frozen	2
Canned	3

When the cook time is over, you will hear four beeps and **END** will display.

PIZZA

Reheating pizza with PIZZA lets you reheat one or several slices of pizza without selecting cooking times and power levels.

Example: To reheat 2 slices of pizza.

STOP/ CLEAR — 1. Touch **STOP/CLEAR.**

PIZZA — 2. Touch **PIZZA.**
When the cook time is over, you will hear four beeps and **END** will display.

POTATO

Cooking with POTATO lets you bake one or several potatoes without selecting cooking times and power levels.

NOTE:
- **Before baking**, pierce potato with fork several times.
- **After baking,** let stand for 5 minutes wrapped.

Example: To cook 2 potatoes.



1. Touch **STOP/CLEAR.**



2. Touch **POTATO.**
When the cook time is over, you will hear four beeps and **END** will display.

COOK

Using COOK lets you heat common microwave-prepared foods without needing to program times and Cook Powers. Sensor Cook has preset Cook Power for 3 food categories: **Frozen Entree, Casserole, and Rice.**

Example: To cook Rice.



1. Touch **STOP/CLEAR.**



2. Touch **COOK.**



3. Choose food category.

Category	Touch pad number
Frozen Entree	1
Casserole	2
Rice	3

When the cook time is over, you will hear four beeps and **END** will display.

REHEAT

REHEAT lets you heat foods without needing to program times and Cook Powers.
REHEAT has preset Cook Powers for 3 categories: **Casserole, Dinner Plate, and Soup/Sauce.**

Example: To reheat Casserole.



1. Touch **STOP/CLEAR.**



2. Touch **REHEAT.**



3. Choose food category.

Category	Touch pad number
Casserole	1
Dinner Plate	2
Soup/Sauce	3

When the cook time is over, you will hear four beeps and **END** will display.

AUTO DEFROST

Your microwave oven is preset with three defrost sequences. Using AUTO DEFROST is the best way to defrost frozen foods. The Auto Defrost Sequence Table below provides some basic guidelines for using the three defrost sequences.

Example: To defrost 1.2 lbs of ground beef.



1. Touch **STOP/CLEAR.**



2. Touch **AUTO DEFROST.**



3. Choose food category.

Category	Touch pad number
Meat	1
Poultry	2
Fish	3



4. Enter the weight.



5. Touch **START.**

6. After 1/3 of the defrost time is over, The display will prompt you to turn over food. Open door, turn over food, and shield any warm portions.



7. Close the door and restart.

8. After 2/3 of the defrost time is over, the display will prompt you to turn over food. Repeat steps 6 and 7. When the defrost time is over, you will hear four beeps and **END** will display.

NOTE: If you do not open the door, the display will resume the countdown.

Weight conversion chart

You are probably used to food weights as being in pounds and ounces that are fractions of a pound (for example 4 ounces equals 1/4 pound).
However, in order to enter food weight in AUTO DEFROST, you must specify pounds and tenths of a pound. If the weight on the food package is in fractions of a pound, you can use the following chart to convert the weight to decimals.

EQUIVALENT OUNCE WEIGHT	NUMBER AFTER DECIMAL	
1.6	.10	
3.2	.20	
4.0	.25	One-Quarter Pound
4.8	.30	
6.4	.40	
8.0	.50	One- Half Pound
9.6	.60	
11.2	.70	
12.0	.75	Three-Quarters Pound
12.8	.80	
14.4	.90	
16.0	1.00	One Pound

DEFROSTING TIPS

- When using AUTO DEFROST, the weight to be entered is the net weight in pounds and tenths of pounds (the weight of the food minus the container).
- Only use AUTO DEFROST for raw food. AUTO DEFROST gives best results when food to be thawed is a minimum of 0°F (taken directly from a "true" freezer). If food has been stored in a refrigerator-freezer that does not maintain a temperature of 5°F or below, always program a lower food weight (for a shorter defrosting time) to prevent cooking the food.
- If the food is stored outside the freezer for up to 20 minutes, enter a lower food weight.
- The shape of the package alters the defrosting time. Shallow rectangular packets defrost more quickly than a deep block.
- Separate pieces as they begin to defrost. Separated pieces defrost more easily.
- You can use small pieces of aluminum foil to shield foods like chicken wings, leg tips, and fish tails, but the foil must not touch the side of the oven. Foil can damage the oven lining.
- Shield areas of food with small pieces of foil if they start to become warm.
- For better results, a preset standing time is included in the defrosting time.

AUTO DEFROST CHART

Meat setting

FOOD	SETTING	AT BEEP	SPECIAL INSTRUCTIONS
BEEF			Meat of irregular shape and large, fatty cuts of meat should have the narrow or fatty areas shielded with foil at the beginning of a defrost sequence.
Ground beef (bulk)	MEAT	Remove thawed portions with fork. Turn over. Return remainder to oven.	Do not defrost less than 1/4 lb. Freeze in doughnut shape.
Ground beef (patties)	MEAT	Separate and rearrange.	Do not defrost less than two oz.patties. Depress center when freezing.
Round steak	MEAT	Turn over. Cover warm areas with aluminum foil.	Place on a microwavable roasting rack.
Tenderloin steak	MEAT	Turn over. Cover warm areas with aluminum foil.	Place on a microwavable roasting rack.
Stew beef	MEAT	Remove thawed portions with fork. Separate remainder. Return remainder to oven.	Place in a microwavable baking dish.
Pot roast, chuck roast	MEAT	Turn over. Cover warm areas with aluminum foil.	Place on a microwavable roasting rack.
Rib roast	MEAT	Turn over. Cover warm areas with aluminum foil.	Place on a microwavable roasting rack.
Rolled rump roast	MEAT	Turn over. Cover warm areas with aluminum foil.	Place on a microwavable roasting rack.
LAMB			
Cubes for stew	MEAT	Remove thawed portions with fork. Return remainder to oven.	Place in a microwavable baking dish.
Chops (1 inch thick)	MEAT	Separate and rearrange.	Place on a microwavable roasting rack.
PORK			
Chops (1 inch thick)	MEAT	Separate and rearrange.	Place on a microwavable roasting rack.
Hot dogs	MEAT	Separate and rearrange.	Place on a microwavable roasting rack.
Spareribs Country style ribs	MEAT	Turn over. Cover warm areas with aluminum foil.	Place on a microwavable roasting rack.
Sausage, links	MEAT	Separate and rearrange.	Place on a microwavable roasting rack.
Sausage, bulk	MEAT	Remove thawed portions with fork. Turn over. Return remainder to oven.	Place in a microwavable baking dish.
Loin roast, boneless	MEAT	Turn over. Cover warm areas with aluminum foil.	Place on a microwavable roasting rack.

AUTO DEFROST CHART (continued)

Poultry setting

FOOD	SETTING	AT BEEP	SPECIAL INSTRUCTIONS
CHICKEN Whole	POULTRY	Turn over (finish defrosting breast-side down). Cover warm areas with aluminum foil.	Place chicken breast-side-up on a microwavable roast rack. Finish defrosting by immersing in cold water. Remove giblets when chicken is partially defrosted.
Cut-up		Turn over. Cover warm areas with aluminum foil. Separate pieces and rearrange.	Place on a microwavable roasting rack. Finish defrosting by immersing in cold water.
CORNISH HENS Whole	POULTRY	Turn over. Cover warm areas with aluminum foil.	Place on a microwavable roasting rack. Finish defrosting by immersing in cold water.
TURKEY Breast	POULTRY	Turn over. Cover warm areas with aluminum foil.	Place on a microwavable roasting rack. Finish defrosting by immersing in cold water.

Fish setting

FOOD	SETTING	AT BEEP	SPECIAL INSTRUCTIONS
FISH Fillets	FISH	Turn over. Separate fillets when partially thawed if possible.	Place in a microwavable baking dish. Carefully separate fillets under cold water.
Steaks	FISH	Separate and rearrange.	Place in a microwavable baking dish. Run cold water over to finish defrosting.
Whole	FISH		Place in a microwavable baking dish. Cover head and tail with foil; do not let foil touch sides of microwave . Finish defrosting by immersing in cold water.
SHELLFISH			
Crabmeat	FISH	Break apart.	Place in a microwavable baking dish.
Lobster tails	FISH	Rearrange.	Place in a microwavable baking dish.
Shrimp	FISH	Separate and rearrange.	Place in a microwavable baking dish.
Scallops	FISH	Separate and rearrange.	Place in a microwavable baking dish.

NOTE : Food to be defrosted must be not more than 6.0 lbs. (4.0kg)
* Available weight is 0.1~6.0 lbs. (0.1~4.0kg)

OPERATION

USE OF THE TWO POSITION METAL RACK

The two position Metal Rack gives you extra space when cooking in more than one container at the same time. The metal rack can be turned upside/down to help fit taller containers on the bottom of the oven.

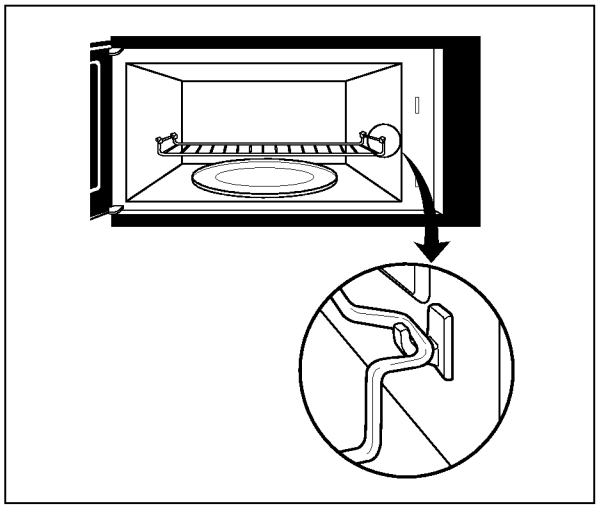

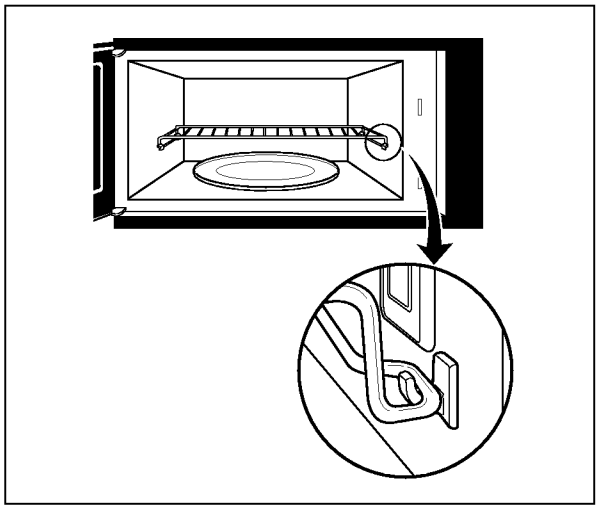

NOTE:

- Rack must be on four supports when used.
- Avoid having rack touching metal walls.
- Insert the rack securely into the four supports on the side walls of the oven.
- Turn the rack upside-down when using taller containers on the bottom of the oven.
- Use the rack only when cooking food on two levels.
- Food microwave best when place directly on the oven floor.
- Do not store or cook with rack on floor of the oven. Product damage may result.
- Do not store microwave browning dish on rack.

How to reheat several different type of foods together. When heating several different type of food together, foods which should be served hot must be placed on the oven floor, While foods which need only to be warm should be placed on the rack.

WARNING:

DO NOT RUN THE OVEN EMPTY, WITHOUT FOOD IN IT.

MAINTENANCE

CARE AND CLEANING

For best performance and safety, keep the oven clean inside and outside. Take special care to keep the inner door panel and the oven front frame free of food or grease build-up.

Never use rough powder or pads. Wipe the microwave oven inside and out, including the hood bottom cover, with a soft cloth and a warm(not hot) mild detergent solution. Then rinse and wipe dry. Use a chrome cleaner and polish on chrome, metal and aluminum surfaces. Wipe spatters immediately with a wet paper towel, especially after cooking chicken or bacon. Clean your oven weekly or more often, if needed.

METAL RACK

Wash the metal rack with a mild soap and a soft or nylon scrub brush.Dry completely.

Do not use abrasive scrubbers or cleaners to clean rack.

CLEANING THE GREASE FILTER

The grease filter should be removed and cleaned often, at least once a month.

1. To remove grease filter, slide filter to the side. Pull filter downward and push to the other side. The filter will drop out.

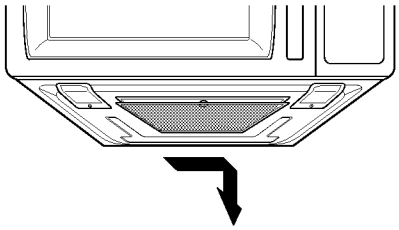

2. Soak grease filter in hot water and a mild detergent. Rinse well and shake to dry. **Do not use ammonia or place in a dishwasher. The aluminum will darken.**

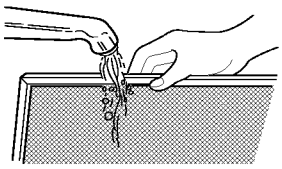

3. To reinstall the filter, slide it into the side slot, then push up and toward oven center to lock.

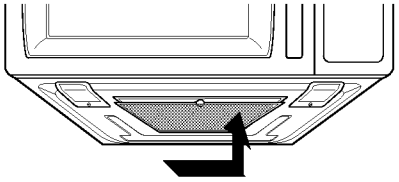

NOTE: **Do not** operate the hood without the filter in place.

CHARCOAL FILTER REPLACEMENT

If your oven is vented inside, the charcoal filter should be replaced every 6 to 12 months, and more often if necessary. The charcoal filter cannot be cleaned.

To order a new charcoal filter, contact the Service Center.

1. Remove the two vent grille mounting screws. (2 middle screws)
2. Tip the grille forward, then lift it out

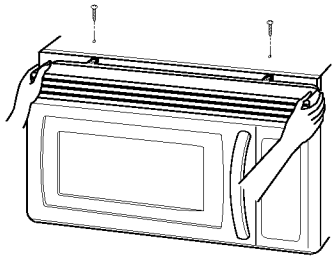

3. Remove old filter.

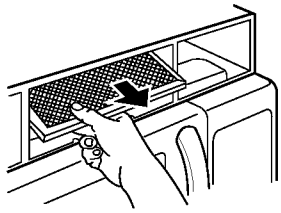

4. Slide a new charcoal filter into place. The filter should rest at the angle shown and set the clock.

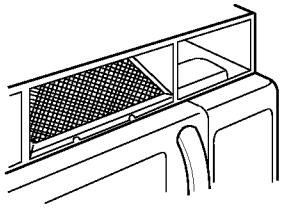

5. Slide the bottom of the vent cover into place. Push the top until it snaps into place. Replace the mounting screws. Turn the power back on at the main power supply and set the clock.

MAINTENANCE

COOKTOP/NIGHT LIGHT REPLACEMENT

1, Unplug oven or turn off power at the main power supply.
2. Remove the bulb cover mounting screws.

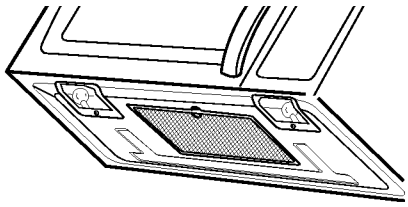

3. Replace bulb(s) with 30 watt appliance bulb(s).
4. Replace bulb cover, and mount screw.
5. Turn the power back on at the main power supply.

OVEN LIGHT REPLACEMENT

1. Unplug oven or turn off power at the main power supply.
2. Remove the vent cover mounting screws. (2 middle screws)
3. Tip the cover forward, then lift out to remove.

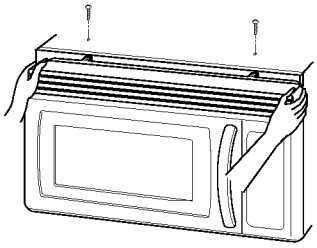

4. Lift up the bulb holder.

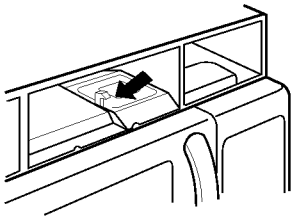

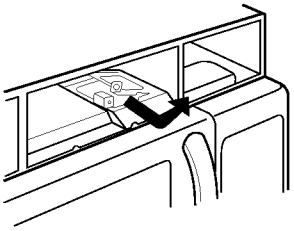

5. Replace bulb with a 30 or 40 watt appliance bulb.
6. Replace the bulb holder.
7. Slide the top of the vent cover into place. Push the bottom until it snaps into place. Replace the mounting screws. Turn the power back on at the main power supply.

QUESTIONS AND ANSWERS

Q. Can I use a rack in my microwave oven so that I may reheat or cook in two levels at a time?

A. Only use the rack that is supplied with your microwave oven. Use of any other rack can result in poor cooking performance and/or arcing and may damage your oven.

Q. Can I use either metal or aluminum pans in my microwave oven?

A. Usable metal includes aluminum foil for shielding (use small, flat pieces), and shallow foil trays (if tray is 3/4 inch deep and filled with food to absorb microwave energy). Never allow metal to touch walls or door.

Q. Sometimes the door of my microwave oven appears wavy. Is this normal?

A. This appearance is normal and does not affect the operation of your oven.

Q. What are the humming noises that I hear when my microwave oven is operating?

A. You hear the sound of the transformer when the magnetron tube cycles on and off.

Q. Why does the dish become hot when I microwave food in it? I thought that this should not happen.

A. As the food becomes hot it will conduct the heat to the dish. Use hot pads to remove food after cooking.

Q. What does "standing time" mean?

A. "Standing time" means that food should be taken out of the oven and covered for additional time after cooking. This process allows the cooking to finish, saves energy and frees the oven for other purpose.

Q. Can I pop popcorn in my microwave oven? How do I get the best results?

A. Yes. Pop packaged microwave popcorn following manufacturer's guidelines or use the preprogrammed Popcorn pad.
Do not use regular paper bags. Use the "listening test" by stopping the oven as soon as the popping slows to a "pop" every one or two seconds. Do not try to repop unpopped kernels. You can also use special microwave poppers. When using a popper, be sure to follow manufacturer's directions. Do not pop popcorn in glass utensils.

Q. Why does steam come out of the air exhaust vent?

A. Steam is normally produced during cooking. The microwave oven has been designed to vent this steam out the top vent.

MAINTENANCE

You may microwave in many more utensils than you can use on the stove or in a conventional oven, because microwaves penetrate them safely still cooking the food.

Below are listed the utensils you can safely cook with and those you must avoid. To test whether you can safely with a utensil not on the lists below, do the following:

1. Place the utensil empty in the microwave oven.
2. Measure 1 cup of water in a glass measuring cup and place in the oven beside the utensil.
3. Microwave on HI Power for 1 minute.
4. If the utensil is warm to the touch at the end of this time, you should not use it for microwave cooking.

MICROWAVE UTENSIL GUIDE

USE	DO NOT USE
OVENPROOF GLASS (treated for high intensity heat): utility dishes, loaf dishes, pie plates, cake plates, liquid measuring cups, casseroles and bowls without metallic trim. **CHINA:** bowls, cups, serving plates and platters without metallic trim. **PLASTIC:** Plastic wrap (as a cover)-- lay the plastic wrap loosely over the dish and press it to the sides. Vent plastic wrap by turning back one edge slightly to allow excess steam to escape. The dish should be deep enough so that the plastic wrap will not touch the food. As the food heats it may melt the plastic wrap wherever the wrap touches the food. Use plastic dishes, cups, semirigid freezer containers and plastic bags **only for short cooking time. Use these with care because the plastic may soften from the heat of the food.** **PAPER:** Paper towels, waxed paper, paper napkins and paper plates with no metallic trim or design. Look for the manufacturer's label for use in the microwave oven.	**METAL UTENSILS:** Metal shields the food from microwave energy and produces uneven cooking. Also avoid metal skewers, thermometers or foil trays.Metal utensils can cause arcing, which can damage your microwave oven. **METAL DECORATION:** Metal-trimmed or metal-banded dinnerware, casserole dishes, etc. The metal trim interferes with normal cooking and may damage the oven. **ALUMINUM FOIL:** Avoid large sheets of aluminum foil because they hinder cooking and may cause harmful arcing. Use small pieces of foil to shield poultry legs and wings. Keep ALL aluminum foil at least 1 inch from the side walls and door of the oven. **WOOD:** Wooden bowls and boards will dry out and may split or crack when you use them in the microwave oven. Baskets react in the same way. **TIGHTLY COVERED UTENSILS:** Be sure to leave openings for steam to escape from covered utensils. Pierce plastic pouches of vegetables or other food items before cooking. Tightly closed pouches could explode. **BROWN PAPER:** Avoid using brown paper bags. They absorb too much heat and could burn. **FLAWED OR CHIPPED UTENSILS:** Any utensil that is cracked, flawed or chipped may break in the oven. **METAL TWIST TIES:** Remove metal twist ties from plastic or paper bags. They become hot and could cause a fire.

BEFORE CALLING FOR SERVICE

Check the following list to be sure a service call is really necessary. A quick reference of this manual as well as reviewing additional information on items to check, may prevent an unneeded service call.

If nothing on the oven operates:
- check for a blown circuit fuse or a tripped main circuit breaker.
- check if oven is properly connected to electric circuit in house.
- check that controls are set properly.

If the oven interior light does not works:
- the light bulb is loose or defective.

If oven will not cook:
- check that control panel was programmed correctly.
- check that door is firmly closed.
- check that Start Pad was touched.
- check that probe was inserted correctly into receptacle.
- check that timer wasn't started instead of a cook function.

If oven takes longer than normal to cook or cooks too rapidly:
- be sure the Power Level is programmed properly.

If the time of day clock does not always keep correct time:
- check that the power cord is fully inserted into the outlet receptacle.
- be sure the oven is the only appliance on the electrical circuit.

If food cooks unevenly:
- be sure food is evenly shaped.
- be sure food is completely defrosted before cooking.
- check placement of aluminum strips used to prevent overcooking.

If food is undercooked:
- check recipe to be sure all directions (amount, time, & power levels) were correctly followed.
- be sure microwave oven is on a separate circuit.
- be sure food is completely defrosted before cooking.

If food is overcooked:
- check recipe to be sure all directions (amount, power level, time, size of dish) were followed.

If arcing (sparks) occur:
- be sure microwavable dishes were used.
- be sure wire twist ties weren't used.
- be sure oven wasn't operated when empty.
- make sure metal rack (if used) is properly, installed on 4 supports.

If the Display shows a time counting down but the oven is not cooking:
- check that door is firmly closed.
- check that Timer wasn't started instead of a cooking function.

BEFORE CALLING FOR SERVICE

You can often correct operating problems yourself. If your microwave oven fails to work properly, locate the operating problem in the chart below and try the solutions marked for each problem.
If the microwave oven still does not work properly, contact the nearest Service center. Service Centers are fully equipped to handle your service requirements.

PROBLEM	SOLUTION
Oven will not start	Is power cord plugged in? Is door closed? Cooking time not set. Temperature not set or probe not plugged in.
Arcing or Sparking	Use approved cookware only. Properly position temperature probe. Do not operate with oven empty.
Time of day incorrect	Reset time of day.
Probe Light Flashes	Is temperature probe properly plugged in?
Unevenly Cooked Foods	Use approved cookware only. Turn or stir food. Completely defrost food.
Overcooked Foods	Properly position temperature probe. Use correct time. / Power level setting. Use correct temp setting.
Undercooked Foods	Use approved cookware only. Properly position temperature probe. Completely defrost food. Use correct time. / Power level setting. Use correct temp setting. Check see that oven ventilation ports are not restricted.
Improper Defrosting	Use approved cookware only. Turn or stir food. Use correct time. / Power level setting.
Oven Lamp does net Light	Is power cord plugged in? Is door closed? Cooking time not set. Is light bulb burned out?

CENTRE DE SERVICE AUTORISÉ INDEPENENT PAR

LG ELECTRONICS CANADA, INC.

AUTHORIZED INDEPENDENT SERVICE CENTERS

not all listed service centres repair all product, please see product code listed below

BRITISH COLUMBIA & NORTHWEST TERRITORIES

CRANBROOK
DANNYS HOME ENTERTAINMENT
11B 14TH AVE S
VIC 2W9 (604) 426-7413
Al A2 A3 B1 B2 B3 B5 E1 E5

FORT ST-JOHN
DIVERSIFIED ELECTRONICS
10607-101 ST AVENUE
V1J 5J4 (604) 785-9119
B1 B2 B3

KAMLOOPS
GIDDENS SERVICES LTD.
1613 VALLEYVIEW DRIVE
V2C 4B4 (604) 372-8842
Al A2 A3 A4 B1 B2 B3 C1 E1 E2 E4 E5

KAMLOOPS
JOHNS ELECTRIC REPAIR CENTER
773 VICTORIA STREET
V2C 285 (604) 374-0388
A1 A2 A3 B1 B2 B3 C1 E1 E5

KELOWNA
VALLEY DIG ITRONICS SERVICE LTD
2453 HIGHWAY 97 NORTH
VIX 4J2 (604) 763-8366
A1 A2 A3 A4 B1 B2 B3 C1 E1 E5 Z1

KITIMAT
WINGS ELECTRONICS
161 CITY CENTRE
V8C 1T6 (604) 632-4247
A1 A2 A3 A4 B1 B2 B3 B5 C1 C2 E1 E5

LANGLEY
A.A.A TV SERVICE
19-9316-194TH STREET
V3T 4W2 (604) 888-7777
A1 A2 A3 A4 B1 B2 B3 B5 E1 Z1

LANGLEY
FRASER VALLEY VIDEO REPAIR
21271-40TH STREET
V3A 4P5 (604) 530~6094
A1 A2 A3 A4 B3 Z1

MAPLE RIDGE
HANEY TV & SOUND SERVICE
11781 FRASER ST
V2X 6C6 (604) 467-4955
A1 A2 A3 B1 B2 B3 B5 C1 E1 E5

NANAIMO
KEBB ELECTRONICS CLINIC LTD
1609A BOWEN RD
V9S 1G5 (604) 754-6335
A1 A2 A3 A4 B1 B3 C1 E1

PORT ALBERNI
OUALTITY ELECTRONICS LTD.
4414 MARGARET STREET
V9Y 6G6 (604) 724-3422
A1 A2 A3 A4 B1 B2 B3 B5 E1 E5

POWELL RIVER
DIAMOND TV AND RADIO
4844 JOYCE AVE
V8A 3B8 (604) 485-5793
A1 A2 A3 B1 B2 B3 C1 E1 E5

PRINCE GEORGE
ABC TV & STEREO
1-1839 1ST AVENUE
V2L 2Y8 (604) 564-9018
A1 A2 A3 B1 B2 B3 B5 C1 E1 Z1

RICHMOND
ELTEX ELECTRONIC SERVICES
4351 NO.3 ROAD
V6X 2X8 (604) 270-8480
A1 A2 A3 A4 B1 B2 B3 B4 C1 E1 E2 E5 F2

RICHMOND
MICROTECH SERVICE CORP.
130-2188 5 ROAD
V6X 2T1 (604) 276-8324
B5

RICHMOND
RR VIDEO MASTER LTD
5471 MINORU BLVD
V6X 2B1 (604) 270-7288
A1 A2 A3 A4 B1 B2 B3 Z1

SECHELT
BEACON ELECTRONICS
RR 1 HEATHER RD
VON 3A0 (604) 885-5963
A1 A2 A3 A4 B1 B2 B3 B5 E1 E5

SURREY
GUILDFORD ELECTRONICS LTD
113-9547 152ND ST S
V3R 5Y5 (604) 581-2272
A1 A2 A3 A4 B1 B2 B3 B5 C1 E1 E5 Z1

TERRACE
ELECTRONICS PLUS
4617 LAZELLE AVE
V8G 1S3 (604) 635-4577
A1 A2 A3 A4 B1 B2 B3 B5 C1 C2 E1

TERRACE
THE TV SHOP
4807 HAMER AVE
V8G 2E5 (604) 635-4695
A1 A2 A3 A4 B1 B3 E1

VANCOUVER
VANCOUVER MICRO SERVICE
2643 KINGSWAY
V5R 4H4 (604) 433-2446
A1 A2 A3 A4 B1 B2 B3 B5 C1 E1 E5

VICTORIA
AMP SERVICE CENTRE
101 3347 OAK ST.
V8X 1R2 (604) 475-3065
A1 A2 A3 A4 B1 B2 B3 B4 C1 E1

VICTORIA
BC SOUND & RADIO SERVICE
1805 FORT STREET
V8R 1J6 (604) 595-4225
A1 A2 A3 A4 B1 B2 B3 C1 C2 E1 E5

NORTHWEST TERRITORIES

YELLOWKNIFE
ARCTIC APPLIANCE SERVICE
4310-50TH AVE
X1A 1B5 (403) 920-4511
E1 E2 E4 E5

ALBERTA

CALGARY
ABBA ELECTRONICS
1916 37TH STREET SW
T3E 3A3 (403) 240-2669
A1 A2 A3 A4 B1 B2 B3 B5 E1 E2

CALGARY
CITY-WIDE ELECTRONICS
311-36 AVE SE
T2G 1W1 (403) 243-0925
A1 A2 A3 A4 B1 B2 B3 C1 E1

CALGARY
MICROTECH
2735-39 AVE NE 100
T3E 5R9 (403) 250-7041
A1 A2 A3 A4 B1 B3 C1 E1

CALGARY
NATIONAL ELECT SERVICE ASC 2
1266-73 AVENUE S.E.
T2H 2V5 (403) 252-6988
A1 A2 A3 A4 B1 B2 B3 B5 C1 E1 E5

CALGARY
SOUTHLAND CROSSING TV
9827-C HORTON SW
T2V 2X5 (403) 255-9647
A1 A2 A3 B1 B2 B3 B4 C1 E1 E2 E5 F2

CAMROSE
ELECTRONIC SERVICES
4612-49 AVE
T4V 0M6 (403) 672-3601
B1 E1 E2 Z1

CANMORE
MOUNTAIN ELECTRONIC SERVICES
BOX 2459 1316 RAILWAY AVE T0L 0M0 (403) 678-6448
A1 A2 A3 B1 B2 B3 B5 C1 C2 E1 E2 E5

EDMONTON
STERLING T.V. AND VIDED
15608-116 AVE
T5M 3S5 (403) 455-8725
A1 A2 A3 A4 B1 B2 B3 B5 C1 E1 E5

EDMONTON
VIDED TECH
5310-89 ST
T6E 5P9 (403) 468-5856
A1 A2 A3 A4 B1 B3 C1 E1

GRAND CENTRE
CENTRE TV AND APPLIANCE SERV
5804-50TH AVE
T0A 1T1 (403) 594-2425
A1 A2 A3 A4 B1 B3 B5 C1

GRANDE PRAIRIE
G.P. ELECTRONICS SERVICE
10702-100TH STREET
T8V 3X8 (403) 539-4240
A1 A2 A3 A4 B1 B3 B5 C1

GRANDE PRAIRIE
T.V. KORNER
9827-97TH AVE
T8V 0M9 (403) 539-4805
A1 A2 A3 A4 B1 B2 B3 B5 C1 C2 E1

INNISFAIL
VIDEOTRONICS SERVICE
NO 3, 4912-52 STREET
T4G 1S7 (403) 227-4111
A1 A2 A3 B1 B2 B3 C1 E1 E2

LETHBRIDGE
FAITH ELECTRONICS LTD.
1422-2 AVE SOUTH
T1J 0E9 (403) 327-2977
A1 A2 A3 A4 B1 B2 B3 C1 E1 E5 Z1

LETHBRIDGE
PRO TELEVISION SALES
1815-2nd AVENUE SOUTH
T1J 0E8 (403) 328-4977
A1 A2 A3 B1 B2 B3 E1

MEDICINE HAT
GUST'S RADIO TV
913 SOUTH RAILWAY ST. S.E.
T1A 2W3 (403) 526-6815
A1 A2 A3 A4 B1 B2 B3

MEDICINE HAT
TEL-RAY TELEVISION
683 SOUTH RAILWAY STREET SE
T1A 2V8 (403) 526-4588
A1 A2 A3 B1 B3 E1

PEERS
KARLS TV SERVICE
C.2. SITE 19, RR1
T0E 1W7 (403) 693-3737
B1 B2 B3 Z1

RED DEER
MIDWAY APPLOANCE SERVICE
BAY 11-7895 49 TH AVE
T4N 6K2 (403) 342-1353
E1 E2 E3 E4 E5

RED DEER
TOWN & COUNTRY RADIO & TV
4A 4999-76 STREET
T4P 1T5 (403) 347-4388
A1 A2 A3 B1 B2 B3 E1 E5

VERMILION
VERMILION COMMUNITY T.V. BOX 786
T0B 4M0 (403) 853-5007
A1 A2 A3 B1 B2 B3 C1 E1 E5

SASKATCHEWAN

CARROT RIVER
CHANNEL 16 ELECTRONICS BOX 416
S0E 0L0 (306) 768-3784
A1 A2 A3 B1 B2 B3 C1 C2

KINDERSLEY
STEVE'S T.V. & RADIO SERVICE
BOX 2728 304 2ND AVE W.
S0L 1S0 (306) 463-2930
A1 A2 B1 B3 E1

KINISTTHO
TOM'S TV & RADIO SERVICE BOX 369
SOJ 1H0 (306) 864-2244
A1 A2 A3 B1 B2 E1 E5

LLOYDMINSTER
CLAUDE'S T.V. SERVICE
4912-49 AVENUE
S9V 0T6 (306) 825-9441
B1 E1

MEADOW LAKE
CLAUDE'S ELECTRONIC REPAIR
BOX 3184
S0M 1V0 (306) 236-3160
A1 A2 A3 A4 B1 B3 B5 E1

N BATTLEFORD
SPECTRONIC SERVICE LTD.
11204 RAILWAY AVE.E.
S9A 2R7 (306) 446-2345
B1 B2 B3 E1

NORTH BA TTLEFORD
TWIN CITY TV & RADIO LTD
1922-100 TH STREET
S9A 0X3 (306) 446-2322
A1 A2 A3 A4 B1 B2 B3 C1 B5 E1

PRINCE ALBERT
ALS ELECTRONIC SERVICE LTD.
127A 16 TH ST W
S6V 3V2 (306) 763-7790
A1 A2 A3 A4 B1 B2 B3 E1 E5

PRINCE ALBERT
GALAXY ELECTRONICS LTD.
1306 CENTRAL AVE
S6V 4W3 (306) 764-7377
A1 A2 A3 A4 B1 B2 B3 B5 E1E5

SASKA TOON
AAA TV DOCTOR
2207 & 2209 FIRST AVE.
NORTH S7K 2A4 (306) 242-1797
A1 A2 A3 A4 B1 B2 B3 B5 C1 E1 E5

SASKA TOON
TRICOM ELECTRONICS
1926 ALBERTA AVENUE
S7K 1R9 (306) 653-3913
A1 A2 A3 A4 B1 B2 B3 E1 E5

SASKA TOON
WESTWAY APPLIANCE SERVICE INC
5-1622 ONTARIO AVE
S7K 1S8 (306) 652-1550
E1

YORKTON
DALIN ELECTRONICS
80 SMITH STREET
S3N 0J4 (306) 783-3420
A1 A2 A3 B1 B3 C1 E1

YORKTON
BONSAL'S APPLIANCE REPAIR LTD.
76 7TH AVE S., BOX 160
S3N 2V7 (306) 783-8991
E1 E2 E4 E5

CENTRE DE SERVICE AUTORISÉ INDEPENENT PAR

LG ELECTRONICS CANADA, INC.

AUTHORIZED INDEPENDENT SERVICE CENTERS

not all listed service centres repair all product, please see product code listed below

MANITOBA

BRANDON
TELEVISION CITY
1639 ROSSER AVE
R7A 0M9 (204) 728-1232
A1 A2 A3 A4 B1 B2 B3 C1 C2 E1 E2

PORTAGE LA PRAIRIE
REEVES SERVICES
446 TUPPER STREET NORTH
R1N 1X5 (204) 857-7233
A1 A2 A3 B1 B2 B3 C1 C2 E1 Z1

WINNIPEG
AUTEK LAO LTD
488 ST. ANNES ROAD
R2M 3E1 (204) 256-4048
A1 A2 A3 A4 B1 B3 C1 C2 E1

WINNIPEG
JAPAN AUDIO
1037 ERIN STREET
R3G 2X1 (204) 775-0494
A1 A2 A3 A4 B1 B2 C1 E1 E5 F2

WINNIPEG
MM ELECTRONICS SYSTEMS LTD
695 LOGAN AVE
R3E 1M5 (204) 788-4450
A1 A2 A3 A4 B1 B3 B5 C1 E1

WINNIPEG
SUPERIOR APPLIANCE SERVICE LTD
729 WALL STREET
R3G 2T6 (204) 775-8677
B1 B2 B3 Z1

WINNIPEG
T.R. ELECTRONIC SERVICES
1646 ST-JAMES STREET
R3H 0L3 (204) 772-6834
A1 A2 A3 A4 B1 B2 B3 B4 E1 E5

WINNIPEG
THE VIDED RE-FIT SHOP
3147 PORTAGE AVE
R3K 0W4 (204) 831-0862
A1 A2 A3 B1 B2 B3 E1 Z1

ONTARIO

AJAX
DUNBARTION RADIO AND TV LTD
29 HARWOOD AVE SOUTH 3
L1S 2B8 (905) 686-3957
A1 A2 A3 A4 B1 B2 B3 E1 Z1

BARRIE
NORTHERN ELECTRONIC SERVICES
165 WELLINGTON ST W UNIT 2A
L4N 1L7 (705) 733-2195
A1 A2 A3 A4 B1 B2 B3 C1 C2 E1

BELLEVILLE
CONSUMERS ELECTRONICS
257 NORTH FRONT ST
K8P 3C3 (613) 966-3599
A1 A2 A3 A4 B1 B2 B3 C1 C2 E1

BELLEVILLE
MILLER ELECT. SERVICING CO. MAITLAND PLAZA, UNIT 3
K8N 4Z5 (613) 969-5299
A1 A2 A3 A4 B1 B2 B3 E1 E5 Z1

CAMBRIDGE
CAMBRIDGE ELECTRONICS LTD
645 KING STE
N3H 3N7 (519) 653-2120
A1 A2 A3 A4 B1 B2 B3 B5 C1 C2

CAMBRIDGE
PRESTON TV AND RADIO
238 LOWTHER ST N
N3H 1Y1 (519) 653-0130
A1 A2 A3 B1 B2 B3 B5 E1

COBOURG
RON LINTON APPLIANCE SERVICE
434 KING ST W
K9A 2N7 (805) 372-8761
E1 E2 E4 E5

COBOURG
UNITED TELEVISION COBOURG LTD.
66 KING STREET EAST
K9A 1K9 (905) 372-6832
A1 A2 A3 A4 B1 B2 B3 E1 E5

CORNWALL
CURRIER REPAIR SERVICE
360 BALMORAL AVE
K6H 6K1 (613) 932-8235
EI E2 E3 E4 E5

CORNWALL
TIM'S ELECTRONICS
1124 PAULOTREET
K6H 6H5 (613) 933-4037
A1 A2 A3 B1 B2 B3 C1 E1 E5

DOWNSVIEW
RAYJAC ELECTRONICS
701 PETROLIA ROAD
M3J 2N6 (416) 661-5237
A1 A2 A3 A4 B1 B3 B5 C1 E1 Z1

ELGINBURG
HALL ELECTRONIC SERVICE
2162 UNITY RD.
K0H 1M0 (613) 541-0808
A1 A2 A3 A4 B1 B2 B3 B5

ELLIOT LAKE
SUPERIOR AUDIO AND VIDEO
184 ONTARIO AVE.
P5A 1Y4 (705) 848-2366
A1 A2 A3 A4 B1 B2 B3 C1 E1 E5

HAMILTON
ALL BEST AUDIO VIDEO LTD.
70 NEBO ROAD, UNIT 3
L8W 2E3 (905) 575-3486
A1 A2 A3 A4 B1 B2 B3 C1 E1 E2 E3 E5

HAMILTON
COLTECH ELECTRONICS INC 306 KENORA AVE
L8E 2W2 (905) 561-5506
A1 A2 A3 A4 B1 B2 B3 C1 E1

HORNEPAYNE
BOZEC ELECTRIC
90 FRONT ST
POM 1Z0 (807) 868-3023
EI E2 E4 E5

KAPUSKASING
MICHEL T.V. SERVICE
110 BRUNELLE NORTH
P5N 2M2 (705) 335-5223
A1 A2 A3 A4 B1 B2 B3 B5 C1 E1 Z1

KINGSTON
DEPOT CONSUMER SERVICE LTD
607 GARDINERS RD
K7M 3Y4 (613) 384-1660
A1 A2 A3 B1 B2 B3 C1 E1 E2 E3 E5

KINGSTON
MONTGOMERY ELECTRONICS
3079 PRINCESS STREET RR 3
L7L 4V2 (613) 389-2846
A1 A2 A3 A4 B1 B2 B3 E1 E2 E5

KITCHENER
TOP TECH ELECTRONICS (KITCHEN)
907 FREDERICK STREET
N2B 2B9 (519) 578-7600
Z1

LONDON
ADVANCED AUDIO 8 VI DED SERVICE
60 MEG DRIVE, UNIT 14
N6E 3T6 (519) 686-4334
A1 A2 A3 A4 B1 B2 B3 C1 E1

LONDON
TOP TECH ELECTRONICS (LONDON)
310 ADELAIDE ST SOUTH
N5Z 3L2 (519) 686-6515
A1 A2 A3 A4 B1 B2 B3 Z1

MARKHAM
MULTI-ELECTRONICS SERVICE
190 DON PARK ROAD UNITS
L3R 2V8 (905) 475-5068
B3 B4

MARKHAM
RAMTEL INC
39 RIVIERA DRIVE UNIT 11
L3R 8N4 (905) 940-3166
B5

MARKHAM
RELIABLE AUDIO
550 ALDEN ROAD UNIT 104
L3R 6A8 (905) 477-1222
A1 A2 A3 A4 B1 B2 B3 E1 E5

MISSISSAUGA
CENTECH ELECTRONICS
1330 MIDWAY BLVD., UNIT 3
L5T 2G8 (905) 564-8585
A1 A2 A3 B1 B3 C1 E1 F1 F2

MISSISSAUGA
KODAN ELECTRONICS
3045 SOUTH CREEK RD.50
L4X 2X7 (905) 625-5613
A1 A2 A3 A4 B1 B2 B3 B4 C1 E1 E5 Z1

MISSISSAUGA
NUMBER ONE ELECTRONICS
1535 MEYERSIDE DRIVE UNIT 17
L5T 1M9 (905) 564-1100
A1 A2 A3 A4 B1 B2 B3 C1 E1 E2 E5

MISSISSAUGA
PC SERVICE PARTNERS
6715 MILLCREEK DRIVE, SUITE #1
L5N 5V2 (905) 567-3239

MISSISSAUGA
WINDWOOD VIDEO INC
3080 NINDWOOD DRIVE
L5N 2K5 (905) 542-0333
A1 A2 A3 A4 B1 B2 B3 B5 C1 C2 E1 E2 E3 E4 E5

NEWMARKET
HEXTECH CONSUMER ELECTRICS 731 DAVIS DR.
L3Y 2R2 (905) 830-6797
A1 A2 A3 A4 B1 B2 B3 E1 E5

NIAGRA FALLS
RK ENTERPRISES
6355 ARMSTRONG DRIVE
L2H 2L8 (905) 374-0780
B3

NORTH BAY
ADRIENS APPLIANCE SERVICE 1374 FRANKLIN ST
P1A 2S2 (705) 474-1755
EI E3 E4 E5

NORTH BAY
J.E.F. ELECTRONICS LTD
430 OAK STREET EAST
P1B 1A5 (705) 476-2644
B1 Z1

NORTH BAY
R.J. ELECTRONICS
101 FERRIS DRIVE
P1A 8Z4 (705) 474-0830
A1 A2 A3 A4 B1 B2 C1 E1 E5

OSHAWA
VCR CLINIC
1300 KING ST. E 26
L1H 8J4 (905) 723-6373
B1 B3 E1

OTTAWA
REGIONAL HOME APPLIANCE
1221 NEWMARKET ST
K1B 3V1 (613) 741-6520
A1 A2 A3 B1 B2 B3 E1 E2 E3 E4 E5

OTTAWA (GLOUCHESTER)
HOME ELECTRONICS CENTER LTD
5310 CANOTEC UNIT 34
K1J 9N5 (613) 746-7700
A1 A2 A3 A4 B1 B2 B3 C1 E1 E2 E4 E5

OTTAWA (NEPEAN)
CAMSERV
52AIITARES DR UNIT 16
K2E 7Z1 (613) 226-3375
B3 B4 B5

OTTAWA (NEPEAN)
HOME ELECTRONICS CENTRE
3-1950 MERIVALE RD
K2G 5T5 (613) 723-9194
A1 A2 A3 A4 B1 B2 B3 C1 C2 E1 E2 E4 E5

OTTAWA (NEPEAN)
TELE SERVICE ELECTRONICS LTD
1891 MERIVALE ROAD
K2G 1E5 (613) 224-7748
A1 A2 A3 A4 B1 B2 B3 B4 E1 E5 F2 Z1

OWEN SOUND
HOME ELECTRONICS REPAIR 180B 12TH ST E
N4K 1B7 (519) 371-3808
A1 A2 A3 B1 B2 B3 E1

PEMBROKE
M & N ELECTRONICS
574 MILLER STREET
K8A 5Z9 (613) 735-5839
A1 A2 A3 A4 B1 B2 B3 E1

PEMBROKE
MURRAY LEACH APPLIANCE
152 MUD LAKE RD
K8A 6W4 (613) 732-4871
E1 E3 E4 E5

PETERBOROUGH
BILL HAYES RADIO & TV
213 HUNTER STREET W
K9H 2L1 (705) 742-0056
A1 A2 A3 A4 B1 B2 B3 B5 C1 E1 E5

PORT RERRY
PICTURE PERFECT TV SERVICE
72 WATER STREET
L9L 1J2 (905) 985-9500
A1 A2 A3 A4 B1 B2 B3 E1 Z1

RICHMOND HILL
ONE STDP ELECTRONICS SERVICE
85 WEST WILMOT ST. #7
L4B 1K7 (905) 882-0700
F1

SARNIA
DUAL ELECTRONICS
153 MITTON STREET, NORTH
N7T 6G9 (519) 344-2323
A1 A2 A3 A4 B1 B2 B3 E1 E5 Z1

SARNIA
KEELANS SERVICE CENTRE
190 MAXWELL STREET
N7T 5C3 (519) 337-7557
A1 A2 A3 A4 B1 B2 B3 E1 E2 E3 E4 E5 Z1

SCARBOROUGH
AAB-TECH ELECTRONICS INC
1050 MCNICOLL AVE UNIT 10
M1W 2L8 (416) 490-0200
A1 A2 A3 A4 B1 B2 B3 C1 E1 E5

SCARBOROUGH
CONSUMERS ELECTRONICS
87 THORNMOUNT DRIVE 33
M1B 5S5 (416) 281-8411
A1 A2 A3 A4 B1 B2 B3 B4 C1 E3 E4 E5

SIMCOE
K.C. ELECTRONIC SERVICE
40 SYDENHAM ST.
N3Y 1R7 (519) 428-2803
A1 A2 A3 A4 B1 B2 B3 B5 E1 E5

SIOUX LOOKOUT
ADI'S ELECTRONICS
BOX 582
P8T 1A8 (807) 737-2946
A1 A2 A3 B1 B2 B3

SUDBURY
KINGOWAY ELECTRONICS LTD.
1106 KINGOWAY ROAD
P3B 2E5 (705) 566-9290
A1 A2 A3 A4 B1 B2 B3

SUDBURY
STRINGERS ELECTRONICS
1899 LASALLE BLVD
P3A 2A3 (705) 566-5177
A1 A2 A3 A4 B1 B2 B3 E1 E5

CENTRE DE SERVICE AUTORISÉ INDEPENENT PAR

LG ELECTRONICS CANADA, INC.

AUTHORIZED INDEPENDENT SERVICE CENTERS

not all listed service centres repair all product, please see product code listed below

ONTARIO

THUNDER BAY
S & R ELECTRONICS
805 W FREDERICA ST
P7E 3X4 (807) 475-4956
A1 A2 A3 A4 B1 B2 B3 C1 E1 E5

THUNDER BAY
SOUND STEREO SERVICE
189 SOUTH ALGOMA STREET
P7B 3C1 (807) 344-6763
A1 A2 A3 A4 B3 C1 Z1

TILLSONBURG
LES BOYS LTD
3 SIMCOE STREET
N4G 2H4 (519) 842-5904
E1 E2 E4 E5

TILLSONBURG
VATCHER APPLIANCE SERVICE
108B CONCESSION ST. EAST
N4G 1P7 (519) 688-9030
E1 E3 E4 E5

TORONTO
DOWNTOWN AUDIO AND VIDEOELT
457 BATHURST ST.
M5T 2S9 (416) 594-1468
A1 A2 A3 B1 B5 C1 C2 E1 Z1

TORONTO
DOWNTOWN ELECTRONICS, JOHN LU
1643 ST CLAIR AVE W
M6N 1H7 (416) 653-2828
A1 A2 A3 A4 B1 B2 B5 C1 C2 E1 E5

WATERLOO
A-V ELECTRONICS SERVICES 450 WEBER ST N
N2L 4E7 (519) 884-8660
A1 A2 A3 A4 B1 B3 B5 E1 F2

WATERLOO
NARA ELECTRONICS LTD.
372 KING STREET NORTH
N2J 2Z3 (519) 888-9696
A1 A2 A3 A4 B1 B3 B5 E1 F2

WATERLOO
WATERLOO APPLIANCE SERVICE
90 FROBISHER DRIVE
N2V 2A1 (519) 884-2507
E1 E3 E4 E5

WAWA
SUPERIOR ELECTRIC
18 KLONDIKE ST BOX 834
POS 1KO (705) 856-2864
E1 E2 E3 54 E5

WHITBY
VIEWCOM ELECTRONICS INC.
133-1/2 BROCK ST. NORTH
LIH 4H3 (905) 430-0954
A1 A2 A3 A4 B1 B3 C1

WINDSOR
CRESCENT TELEVISION LTD.
3033 MARENTETTE AVENUE
N8X 4G1 (519) 969-1622
A1 A2 A3 A4 B1 B2 B3 B4 C1 E1 E5 Z1

WINDSOR
FACTORY APPLIANCE SERVICE
3647 RIBERDY RD
N8W 3V9 (519) 972-0558
E1 E3 E4 E5

WINDSOR
P. L. G. ELECTRONICS
3314 WALKER RD
N8W 3S1(519) 972-7666
A1 A2 A3 B1 B2 B3 C1 E1 E5

QUEBEC

ALMA
LOUIS DION INC
25 BOUL AUGER O
G8B 2A6 (418) 662-3073
E3 E4 E5

AMOS
A.P. ELECTRONIGUE ENR
92 RUE BEAUDRY
J9T 3V2 (819) 732-0844
A1 A2 A3

ANJOU
CIRCUITS ELECTRONIGUE (6060) ENC
8155 LARREY
H1J 2L5 (514) 352-4111
A1 A2 A3 A4 B1 B2 B3 C1 C2 E1

BAIE COMEAU
ELECTROTECH
1680 BOUL LAFLECHE
G5C 1C9 (418) 589-7515
A1 A2 A3 A4 B1 B2 B3 C1 E1

BEAUPORT
ATELIER AUDIO VIDEO J.F.M. INC
660 AVE. ROYALE
G1E 1Y7 (418) 666-8182
A1 A2 A3 A4 B1 B2 B3 C1 C2 E1 E2

BRIGHAM
SERVICE LAROOUETTE INC
224 RUE DECELLES
JOE 1J0 (514) 777-0770
E1 E2 E3 E4 E5

CHICOUTIMI
CLAUDE GIRARD TV ENR
786 RUE ST-PAUL
G7J 3B7 (418) 549-8767
A1 A2 A3 A4 B1 B2 B3 E1 E5 Z1

CHICOUTIMI
TELEVIDEO AS. INC 2147 BOULEVARD TALBOT
G7H 5B1 (418) 696-2264
A1 A2 A3 A4 B1 B2 B3 E1 Z1

CHOMEDY LAVAL
B & K AUDIO SERVICE
2025 BOUL FORTIN
H7S 1P4 (514) 667-0491
A1 A2 A3 B1 B2 B3 B5 C1 E1 E5

DOLBEAU
VF ELECTRONIOUE ENR
1849 BOUL WALLBERG
G8L 1J1 (418) 276-8191
A1 A2 A3 B1 B2 B3 C1 C2 E1 E5

DRUMMONOVILLE
MORISETTE SERVICE INC
4571 BLVD ST JOSEPH
J2A 1B4 (819) 472-2469
E1 E4 E5

DRUMMONOVILLE
ROSS ELECTRONIOUE INC.
985, BOUL. JEAN DE BREBOELIF
J2B 4T2 (819) 477-1522
A1 A2 A3 A4 B1 B2 B3 B5 C1 E1 Z1

OUPARGUET
GAETAN LACASSE SERVICE
1675 RGV11 CP161
J0Z 1W0 (819) 948-2248
E2 E4 E5

GATINEAU
COSMO-TECH SERVICES INC.
868 MALONEY BLVD EAST
J8P 1H1 (819) 663-4496
Al A2 A3 A4 B1 B2 B3 E1 E2 E3 E4 E5

GRANBY
LA CLINIOUE DU SON INC
78 ASSOMPTION
J2G 3S1(514) 375-2323
A1 A3 B1 B2 B3 B5 E1 E5

IBERVILLE
ALAIN BONNEAU TELEVISION INC
21 RANG OT-EDOLIARD
J2X 5G3 (514) 347-0563
A1 A2 A3 A4 B1 B2 B3 B5 E1 E5

JOLIETTE
B.G. ELECTRONIOUE
150 ST. PIERRE SUD
J6E 5Y7 (514) 759-3091
A1 A2 A3 A4 B1 B2 B3 E1 E5

JONQUIERRE
SERVICE TV ARVIDA INC.
2343 MATHIAS
G7S 3V6 (418) 548-3059
A1 A2 A3 B1B2 B3 B5 C1 E1 E5

LA MALBAIE
ALAIN MURRAY ELECTRONIOLIE
11 RUECIMON
G5A 1E5 (418) 665-3590
A1 A2 A3 B1 B2 B3 B5 C1 Z1

LATUQUE
LED PEPIN TV ENR.
639 DESBIENS
G9X 2K2 (819) 523-3243
A1 A2 A3 B1 B2 B3 C1

LACHINE
CENTRE DE SERVICE DEFI INC.
10500 COIE DE LIESSE STE 55
H8T 1A4 (514) 633-9313
A1 A2 A3 A4 B1 B2 B3 B5 E1 E2 E5

LEMOYNE
VIDEOSUD
200 CHARRON
J4R 2K9 (514) 671-9572
A1 A2 A3 A4 B1 B2 E1

LEVIS
SELECTROTEC
4717 BOUL. DE LA RIVE SUD
G6W 1H5 (418) 835-3966
A1 A2 A3 A4 B1 B2 B3 C1 E1

MANIWAKI
SERVICE FLANSBERRY INC.
375 BOUL DESJARDINS
J9E 2E6 (819) 449-2212
E1 E3 E4 E5

MATANE
FORTIN TV SERVICE
273 RUE ST-PIERRE
G4W 2B7 (418) 562-3571
A1 A2 A3 B1 B2 B3 C1 C2 E1 E5 Z1

MISTASSINI
SERVICE SERGE MICHAUD
122 RUE BOUDREAULT
GOW 2C0 (418) 276-1282
E1 E2 E3 E4 E5

MONT LAURIER
SERVITRONIUE ENR
335 BOUL DES RUISSEAUX
J9L 3G6 (819) 623-7143
A1 A2 A3 A4 B1 B3 E1

MONTREAL
AUDIC VIDEO RD INC
375 DECARIE
H4L 3K7 (514) 336-2222
A1 A2 A3 A4 B1 B2 B3 B4 E1 E5

MT. ROYAL (WEST MDNTREAL)
SOLACMAR INC
5785 PARE STREET
H4P 1S1 (514) 341-1431
A1 A2 A3 A4 B1 B2 B3 E1 E5

QUEBEC
ASTRO-SERVICE ELECTRON IOUE.
2665 BOUL PERE LELIEVRE
G1P 2X9 (418) 687-2787
A1 A2 A3 B1 B2 B3 B5 C1 E1 E5

QUEBEC
AUDYO EEAUDOIN TV INC
670 BOUVIER SUITE 108
G2J 1A7 (418) 623-8960
A1 A2 A3 A4 B1 B2 B3 C1 C2 E1 E5

REPENTIGNY
ATELIERS G PAGUETTE INC
104 LAROCHE
J6A 7M5 (514) 645-6744
A1 A2 A3 B1 B2 E1 E2

REPENTIGNY
MICROVISION
336 NOTRE-DAME, 3
J6A 2S2 (514) 654-5774
A1 A2 A3 A4 B1 B2 B3 B5 C1 E1

RIMOUSKI
M.S.P ELECTRONIOLIE INC.
273 ST GERMAN EST
G5L 1B8 (418) 722-8373
A1 A2 A3 A4 B1 B2 B3 B5 E1

RIVIERS DU LOUP
ELECTRON63UE MERCIER LTEE
162 RUE FRASER
G5R 1C8 (418) 862-7269
A1 A2 A3 B1 B2 C1 C2 E1 E5

SEPT ILES
TECHSERV INC
10 RUE PERE DUVET
G4R 3N2 (418) 962-2391
A1 A2 A3 B1 C1

SEPT ILES
ELECTRO-REF SERVICES
161 PERE DIVET
G4R 3P8 (418) 962-9186
E1 E4 E5

SHERBROOKE
JACOLIES BERGERON TECH
2226 KING ST W
J1J 2E8 (819) 569-1676
A1 A2 A3 A4 B1 B2 B3 B5 E1

ST JEROME
POIRIER RADIO SERVICE
506 RUE ST. GEORGES
J7Z 5B3 (514) 438-3375
A1 A2 A3 A4 B1 B3 E1

ST EUSTACHE
SERVICE OS TV RIVE NORD
307 GRANDE COTE
J7P 1C6 (514) 623-6060
A1 A2 A3 B1 B2 E1 E5

ST GABRIEL DE BRANDON
RICHARD HENRICHON ELECTRON ICIUE
37 BOULEVARD HOULE
JOK 2NO (514) 835-2218
A1 A2 A3 B1 B2 E1

ST HYACINTHE
CENTRE SERVICE PLUS INC
2145 STE ANNE SUITE 101
J2S 5H5 (514) 771-1492
A1 A2 A3 A4 B1 B2 B3

ST LAURENT
HECOTRON LTEE
4800 COTE VERTLI
H4S 1V9 (514) 331-5720
A1 A2 A3 A4 B1 B2 B3 C1 E1 E5

ST PIERRE LES BECOUSTS
J.B. ELECTRONIOLIE ENR
599 MARIE VICTORIN
GOX 2Z0 (819) 263-2559
A1 A2 A3 A4 B1 B2 B3 C1 E1 E5

ST. AGAPIT
SERVICE DE TELE JACOUCS CHABOT
C.P. 460
G0S 1Z0 (418) 888-3857
A1 A2 A3 B1 B2 B3 E1

STE CECILE DE MILTON
MICHAUD VIDEO TV
284 PRINCIPALE
J0E 2C0 (514) 777-2814
A1 A2 A3 A4 B1 B2 B3

TROIS RIVIERE-OUEST
LA8TRONIC
5115 BOUL JEAN XXIII
G8Z 4A5 (819) 373-0066
A1 A2 A3 A4 B1 B2 B3 C1 E1 E2

VAL D'OR
VAL DOR REFREGIRATION LTEE.
1273 5IEME RUE
J0P 4A1 (819) 825-2505

VALLEYFIELO
LES ENTREPRISES ELECTRONOUS
193 RUE MADEN
J6S 3V7 (514) 373-5466
A1 A2 A3 B1 B2 B3 E1 Z1

VICTORIAVILLE
ACTIGN L.M. SERVICE INC.
310 ST. GEORGES
G6P 3A2 (819) 751-0992
E1 E2 E3 E4 E5

VICTORIAVILLE
GERARD MICHAUD ELECJRONOUE
88 NOTRE DAME EST
G6P 3Z6 (819) 758-1877
A1 A2 A3 A4 B1 B2 B3 C1 E1 E5

WINDSOR
WINDSOR ELECTRONIOUS INC.
74-2IEME AVENUE
J1S 1Z3 (819) 845-4202
A1 A2 A3 A4 B1 B2 B3 E1 E5

CENTRE DE SERVICE AUTORISÉ INDEPENENT PAR

LG ELECTRONICS CANADA, INC.

AUTHORIZED INDEPENDENT SERVICE CENTERS

not all listed service centres repair all product, please see product code listed below

NEW BRUNSWICK

BATHURST
ALS TV AND RADIO
579 PATTERSON CRES
E2A 1Z9 (506) 546-5763
B1 E1

BERESFORD
BOUCHARD APPLIANCE
REPAIRS BOX 4062
E0B 1H0 (506) 548-3938
E1 E2 E4 E5

BERTRAND
MM REPARATION
ELECTRONIQUE
RR 1 SITE 22 BTE 4
E0B 1JO (506) 727-7884
A1 A2 A3 B1 B2 C1 C2

CAMPBELLTION
B & G IDEAL SERVICE LTD
81 WATER STREET
E3N 1A9 (506) 753-5474
A1 A2 A3 B1 B3 B5 E1

EDMUNDSTON
PICARD SERVICE INC.
2-47E AVENUE
E3V 3B8 (506) 739-9475
E1 E2 E3 E4 E5

EDMUNSTON
DATA ELECTRONICS
25 HILL STREET
E3V 1H7 (506) 735-4073
A1 A2 A3 B1 B2 B3 B5 C1 E1

FREDERICTON
CYGNUS TECHNOLOGY
LTD
154 HAIN STREET
E3A 1C8 (506) 459-4606
A1 A2 A3 A4 B1 B2 B3 B5 E1

GRAND FALLS
DONALD PICARD
746 3RD AVE C.P. 743
E0J 1M0 (506) 473-5496
B1 B2 B3

MONCTON
B.J.W. ELECTRONICS LTD
59 PACIFIC AVE.
E1E 2G2 (506) 857-2118
A1 A2 A3 A4 B1 B2 B3 C1 E1
E5 Z1

MONCTON
CHAMPLAIN ELECTRONICS
LTD
247 LEWISVILLE RD
E1A 6T1 (506) 854-6663
A1 A2 A3 A4 B1 B2 B3 E1 E5

OROMOCTO
HARTS TV
9 SMITH ST RR3
E2V 2G3 (506) 357-9785
A1 A2 A3 A4 B1 B3 B5 C1 E1

SACKVILLE
TANTRAMAR
ELECTRONICS
70 CRESENT ST BOX 1686
E0A 3C0 (506) 536-3953
A1 A2 A3 B1 B2 B3 B5 E1 E5

ST JOHN
GALBRAITH ELECTRONICS
LTD
646-FAIRVILLE BLVD
E2M 3M2 (506) 635-0317
A1 A2 A3 B1 B2 B3 E1 E5

WOODSTOCK
PLOOM ELECTRONICS
BOX
798 LOWER WOODSTOCK
E0J 2B0 (506) 328-3205
A1 A2 A3 B1 B3 C1 E1

NOVA SCOTIA

ANTIGONISH
MIKE'S HOME FURNISHING
89 ST. ANDREWS STREET
B2G 2G9 (902) 863-2886
A1 A2 A3 B1 B2 B3 C1 C2

BRIDGEWATER
HERLIN ELECTRONICS
209 HIGH ST SUITE A
B4V 1W2 (902) 543-1313
A1 A2 A3 A4 B1 B3 B5 E1

COLDBROOK
N & B EATON MARKETING
LTD
2687 POPLARD DRIVE
B4R 1A9 (902) 679-1852
A1 A2 A3 B1 B2 B3 C1 E1 E5

DARTMOUTH
E.P.BLIGHT 169 MAIN
STREET
B2X 1S1 (902) 434-8306
A1 A2 A3 B1 B2 B3 B5 C1 C2
E1 Z1

DARTMOUTH (HALIFAX)
MUNRO ELECTRONIS
SERVICE
75 AKERLEY BLVD UNIT J
B3B 1R7 (902) 468-4991
A1 A2 A3 A4 B1 B2 B3 B5 E1
E3

KINGSTON
GE KENNEDY ELECTRONIC
REPAIR 1050
WHITTINGTON DRIVE
B0P 1R0 (902) 765-6448
A1 A2 A3 A4 B1 B2 E1

NEW MAINS
VIDEO WORLD
1009 KENTUCKY COURT
B4N 4N1 (902) 681-7577
B4

YARMOUTH
BLUENOSE ELECTRONICS
19 FIRST STREET
B5A 1S9 (902) 742-8885
B1 B2 B3 Z1

PEL
CHARLETTETOWN
GALLANT ELECTRONICS
96 MOUNT EDWARD ROAD
PO 2961
C1A 8C5 (902) 892-3100
A1 A2 A3 A4 B1 B2 B3

NEW FOUNDLAND

CORNER BROOK
A-1 ELECTRONICS
98 WEST STREET
A2H 2Z3 (709) 634-1581
A1 A2 A3 A4 B1 B2 B3 B5 C1
E1 Z1

PASADENA
WILSON TV SERVICE
6 ELMWOOD CRESCENT
A0L 1K0 (709) 686-2617
A1 A2 A3 B1 B2

WABUSH
CLIFFS TV SERVICE
WABUSH PLAZA. BOX 785
A0R 1B0 (709) 282-3941
A1 A2 A3 B1 B2 B3 C1 E1 E5

PRODUCT TYPE CODES.

AUDIO
"A1" = Portable Radio/Tape
"A2" = Home Audio
"A3" = HiFi Audio
"A4" = Compact Disc

VIDEO
"B1" = Television
"B2" = In Home Service
"B3" = VCR & Accessories
"B4" = Camcorder

AUTOMOTIVE
"C1" = Radio/Tape/Amp.
"C2" = Removel & Installation

APPLIANCE
"E1" = Microwave Oven
"E2" = Bread Bakery
"E3" = Air Conditioner
"E4" = Refrigerator
"E5" = In Home Service

BUSINESS EQUIPMENT
"F1" = Telephone & Attach
"F2" = Fax
"B5" = Computer Monitors

IDENTIFICATION DES CONDES

AUDIO
"A1" = Radio Portatif/Cassette
"A2" = Audio maison
"A3" = Audio Hi-Fi
"A4" = Lecteur audionumerique

VIDEO
"B1" = Téléviseur
"B2" = Service maison
"B3" = Magnétoscope & accessorires
"B4" = Caméscope

AUTOMOTIVE
"C1" = Autoradio/lecteur/Ampli.
"C2" = Installation

APAREIL MENAGER
"E1" = Four micro-ondes
"E2" = Four a pain
"E3" = Air conditioné
"E4" = Refrigérateur
"E5" = Service maison

EN AFFAIRES
"F1" = Téléphone & access.
"F2" = Télécopieur
"B5" = Moniteurs d'ordinateur