LG

MICROWAVE/GRILL/COMBINATION OVEN

OWNER'S MANUAL

PLEASE READ THIS OWNER'S MANUAL THOROUGHLY BEFORE OPERATING.

MH-657PL

Precautions

Precautions to avoid possible exposure to excessive microwave energy.

You cannot operate your oven with the door open due to the safety interlocks built into the door mechanism. These safety interlocks automatically switch off any cooking activity when the door is opened; which in the case of a microwave oven could result in harmful exposure to microwave energy.
It is important not to tamper with the safety interlocks.

Do not place any object between the oven front face and the door or allow food or cleaner residue to accumulate on sealing surfaces.

Do not operate your oven if it is damaged. It is particularly important that the oven door closes properly and that there is no damage to the: (1) door(bent), (2) hinges and latches (broken or loosened), (3) door seals and sealing surfaces.

Your oven should not be adjusted or repaired by anyone except qualified service personnel.

Warning

When heating liquids, e.g. soups, sauces and beverages in your microwave oven, delayed eruptive boiling can occur without evidence of bubbling. This could result in a sudden boil over of the hot liquid. To prevent this possibility the following steps should be taken:

1. Avoid using straight sided containers with narrow necks.
2. Do not overheat.
3. Stir the liquid before placing the container in the oven and again halfway through the heating time.
4. After heating, allow to stand in the oven for a short time, stir or shake them(especially the contents of feeding bottles and baby food jars) again carefully and check the temperature of them before consumption to avoid burns (especially, contents of feeding bottles and baby food jars). Be careful when handling the container.
5. Clean the oven interior with a damp cloth after use.
6. Never operate the oven without Glass Tray & Roller rest as it may cause sparking.

Warning

Always allow food to stand after being cooked by microwaves and check the temperature of them before consumption. Especially contents of feeding bottles and baby food jars.

Contents

How the Microwave Oven Works

Microwaves are a form of energy similar to radio and television waves and ordinary daylight. Normally, microwaves spread outwards as they travel through the atmosphere and disappear without effect. Microwave ovens, however, have a magnetron which is designed to make use of the energy in microwaves. Electricity, supplied to the magnetron tube, is used to created microwave energy.

These microwaves enter the cooking area through openings inside the oven. A turntable or tray is located at the bottom of the oven. Microwaves cannot pass through metal walls of the oven, but they can penetrate such materials as glass, porcelain and paper, the materials out of which microwave-safe cooking dishes are constructed.

Microwaves do not heat cookware, though cooking vessels will eventually get hot from the heat generated by the food.

A very safe appliance

Your microwave oven is one of the safest of all home appliances. When the door is opened, the oven automatically stops producing microwaves. Microwave energy is converted completely to heat when it enters food, leaving no "left over" energy to harm you when you eat your food.

Precautions ____ 2
Contents ____ 3
Unpacking & Installing ____ 4 ~ 5
Cleaning Reflector ____ 6
Child Lock ____ 7
Micro Power Cooking ____ 8
Micro Power Level ____ 9
Two Stage Cooking ____ 10
Quick Start ____ 11
Grill Cooking ____ 12
Combination Cooking ____ 13
Auto Cook ____ 14 ~ 15
Auto Defrost ____ 16 ~ 17
More or Less Cooking ____ 18
Quick Defrost ____ 19
Custom Cook ____ 20
Safety precautions ____ 21
Microwave - safe Utensils ____ 22
Food characteristics &
Microwave cooking ____ 23 ~ 24
Questions & Answers ____ 25
Plug Wiring Information/Technical Specifications ____ 26

Unpacking & Installing

By following the basic steps on these two pages you will be able to quickly check that your oven is operating correctly. Please pay particular attention to the guidance on where to install your oven. When unpacking your oven make sure you remove all accessories and packing. Check to make sure that your oven has not been damaged during delivery.

1 Unpack your oven and place it on a flat level surface.

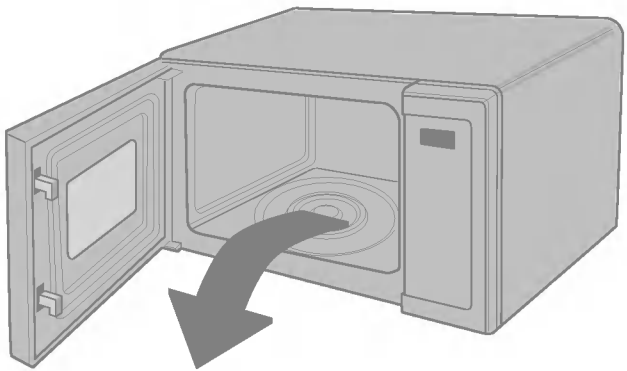

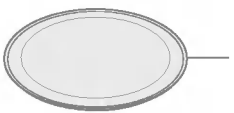

GLASS TRAY



ROTATING RING



COOK TRAY

2 Place the oven in the level location of your choice with more than 85cm height but make sure there is at least 30cm of space on the top and 10cm at the rear for proper ventilation. The front of the oven should be at least 8cm from the edge of the surface to prevent tipping.
An exhaust outlet is located on top or side of the oven. Blocking the outlet can damage the oven.

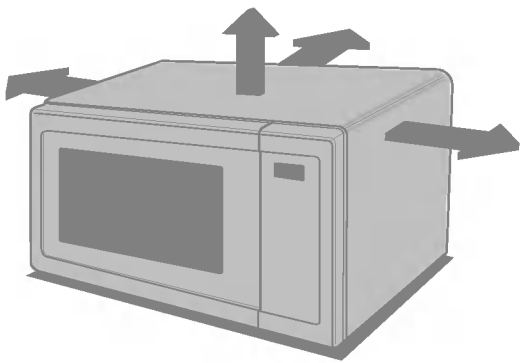

THIS OVEN SHOULD NOT BE USED FOR COMMERCIAL CATERING PURPOSES

3 Plug your oven into a standard household socket. Make sure your oven is the only appliance connected to the socket. **If your oven does not operate properly, unplug it from the electrical socket and then plug it back in.**

4 Open your oven door by pulling the **DOOR HANDLE**. Place the **ROTATING RING** inside the oven and place the **GLASS TRAY** on top.

5 Fill a **microwave safe container** with 300 ml (1/2 pint) of water. Place on the **GLASS TRAY** and close the oven door. If you have any doubts about what type of container to use please refer to page 22.

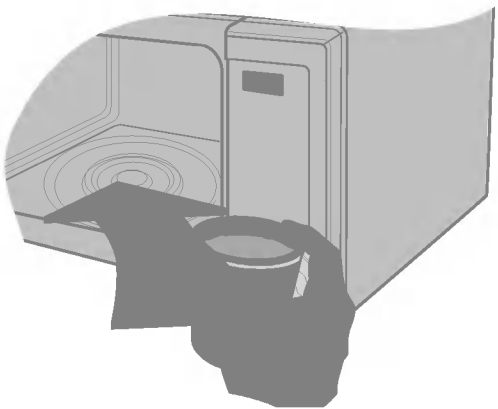

6 Press the **STOP** button, and press the **START** button six times to set 3 minutes of cooking time. You will hear a BEEP each time you press the button. Your oven will start before you have finished the sixth press; don't worry this is normal.



7 The **DISPLAY** will count down from 3 minutes. When it reaches 0 it will sound BEEPS. Open the oven door and test the temperature of the water. If your oven is operating the water should be warm. **Be careful when removing the container it may be hot.**

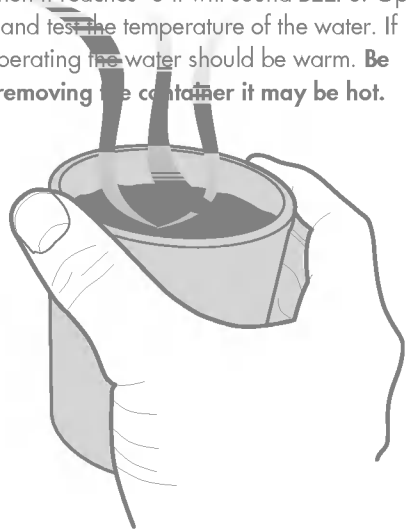

Cleaning
Reflector

When cleaning Reflector, follow the guidelines below.

When Disassemblying

•Make sure that Power Cord is properly connected.

•Be sure that one hour has passed after cooking.

1 Move the Reflector softly with hands so that it is tilted at 45 degree angles.

*Pulling out the Reflector suddenly with too excessive force may damage it.

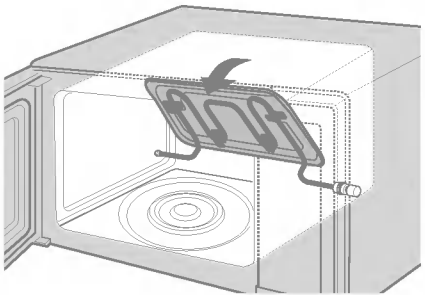

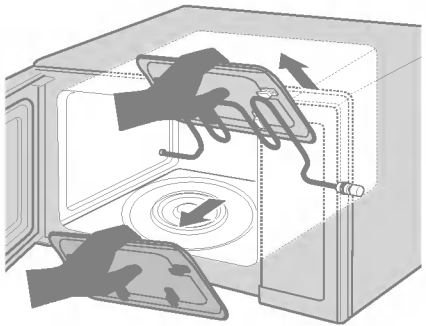

2 Pull it out slowly at 45 degree angles.

When Reassembling After Cleaning

Slide the Reflector in softly over Heater.

*Heater needs no moving. (When cooking starts, it automatically moves.)

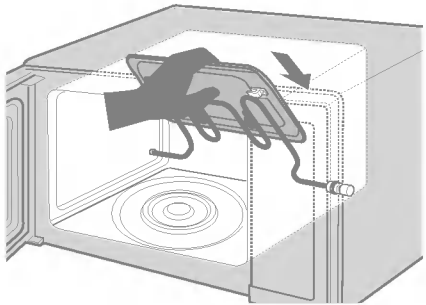

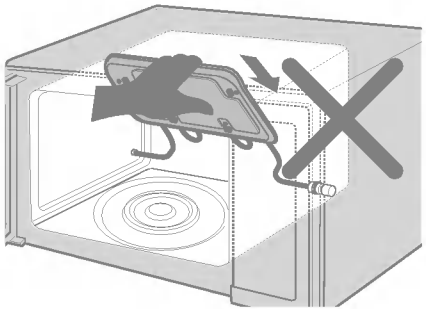

CAUTIONS

1. Do not put Reflector below Heater.
2. Do not insert with too excessive force.
3. Do not use separate tools.

Child Lock



Your oven has a safety feature that prevents accidental running of the oven. Once the child lock is set, you will be unable to use any functions and no cooking can take place.
However your child can still open the oven door.

Press **STOP/CLEAR**



Press **STOP/CLEAR** until "**L**" appears on the display and

set.

The time will disappear on the display if you have set the clock.



"L" display to let you know that **CHILD LOCK** is set.
set, If you touch any key **"L"** appears with



To press and hold **STOP/CLEAR** until "**L**" disappears.
it's released.



Micro Power Cooking

In the following example I will show you how to cook some food on 720W (80%) power for 5 minutes and 30 seconds.



Your oven has five microwave Power settings. High power is automatically selected but repeated presses of the **POWER** button will select a different power level.

POWER	Press POWER		W (%)
HIGH MAX	0	time	900W (100%)
MEDIUM HIGH	1	time	720W (80%)
MEDIUM	2	times	540W (60%)
DEFROST MEDIUM LOW	3	times	360W (40%)
LOW	4	times	180W (20%)

Make [illegible] have correctly installed your oven as described earlier [illegible]

Press **STOP / CLEAR.**



Press [illegible] once.
[illegible] play.
Th[illegible]%) power.
Press **POWER** once to set 720W (80%) power.



Turn [illegible] display shows "5:30".



Press [illegible]



Micro Power Level

Your microwave oven is equipped with 5 power levels to give you maximum flexibility and control over cooking. The table below shows the examples of food and their recommended cooking power levels for use with this microwave oven.



HIGH MAX	900W (100%)	* Boil Water * Brown minced beef * Cook poultry pieces, fish, vegetables * Cook tender cuts of meat
MEDIUM HIGH	720W (80%)	* All reheating * Roast meat and poultry * Cook mushrooms and shellfish * Cook foods containing cheese and eggs
MEDIUM	540W (60%)	* Bake cakes and scones * Prepare eggs * Cook custard * Prepare rice, soup
DEFROST/ MEDIUM LOW	360W (40%)	* All thawing * Melt butter and chocolate * Cook less tender cuts of meat
LOW	180W (20%)	* Soften butter & cheese * Soften ice cream * Raise yeast dough

Two stage Cooking

In the following example I will show you how to cook some food in two stages. The first stage will cook your food for 11 minutes on 900W (100%) power; the second will cook for 35 minutes on 360W (40%) power.



During two stage cooking the oven door can be opened and food checked. Close the oven door and press **START** and the cooking stage will continue.

At the end of stage1, BEEP sounds and stage 2 commences.

Should you wish to clear the programme press **STOP/CLEAR** twice.

Press [redacted]

[redacted]ooking time **for stage1.**



Press **MICRO/GRILL** once to select 900W (100%) power.



Turn [redacted] display shows "11:00".



Set th[redacted] cooking time **for stage2.**



P[redacted]e.

Press **POWER** three times to select 360W (40%) power.



Turn [redacted] display shows "35:00"

P[redacted]





In the following example I will show you how to set 2 minutes of cooking on high power.

Quick Start



The **QUICK START** feature allows you to set 30 seconds intervals of HIGH power cooking with a touch of the **START** button.

Press [redacted]



Press [redacted] to select 2 minutes on HIGH power.
[redacted] you have finished the fourth press.



During [redacted] cooking, you can extend the cooking time up to 99 minutes [redacted] pressing the **START** button.

Grill

Cooking

In the following example I will show you how to use the grill to cook some food for 12 minutes and 30 seconds.



This Model is fitted with a Auto moving Grill Which moves according program selection in grill mode. So pre-heating is not required

Auto moving grill has 2 position



Position 1
(Stationary)

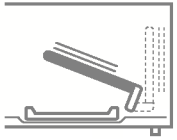

Position 2
Cook tray grilling for non rising dishes

This has be given to make maximum utility of cook tray.

Note:

Please take care in selection of recipe and vessel for cooking in grill mode when not using cook tray. It can obstruct with recipe or utensil.

Pre



Pre ice to select GRILL function.



Turn display shows "12:30".



Pre





Your oven has a combination cooking feature which allows you to cook food with **heater** and **microwave** at the same time or alternately. This generally means it takes less time to cook your food.

The **Robo heater** grills the surface of the food while **microwave** heats inside. Moreover, preheating your oven is not necessary.

The **COOK TRAY** can be used in the Micro Power and Combination Cooking.

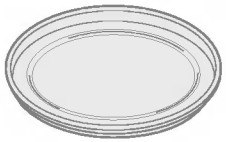

COOK TRAY

Press





Press times.



display.



Turn DIAL until display shows "25:00".





Press



Be careful when removing your food because the container will be hot!



Combination Cooking Mode

CATEGORY	MICRO POWER (%)	HEATER POWER (%)
Co-1	20	80
Co-2	40	60
Co-3	60	40

Auto Cook

In the following example I will show you how to cook 0.6kg of jacket potato.



AUTO COOK allows you to cook most of your favorite food easily by selecting the food type and entering the weight of the food.

Press **STOP/CLEAR**



Turn **DIAL** knob until display shows "Ac-1".
Press **START**.
"0.6" appears on display.
Turn **DIAL** knob until display shows "0.6".



Press **START**.



Ac-1. NOODLE/ MACARONI	Room temp.	Glass tray	0.1 kg ~ 1.0 kg	Soak noodles in water, add spices and chopped vegetable as per required taste. Place the utensil on the glass tray and adjust weight. Press start after cooking,let the dish stand for 3~5 minutes. If required increase time by + or - key.
Ac-2. FRESH VEGETABLE	Room temp.	Glass tray	0.2 kg ~ 0.8 kg	Place prepared vegetables into a suitable sized container (e.g. casserole dish). Add 30 ml water per 0.2 kg vegetables. After Cooking, let stand for 5 minutes.
Ac-3. RICE/BIRYANI	Room temp.	Glass tray	0.2 kg ~ 0.8 kg	Soak Plain rice (for Biryani - Rice mix) in the water for 10 or more minutes. Add required amount of water and use utensil with lid. set the weight by more key, press start. Stir, if necessary while cooking. Fter cooking, let the dish stand for 5 minutes, if required.

Auto Defrost

The temperature and density of food varies, I would recommend that the food is checked before cooking commences. Pay particular attention to large joints of meat and chicken, some foods should not be completely thawed before cooking. These will require a standing time to allow the centre to thaw. In the following example I will show you how to defrost 1.4 Kg of frozen poultry.



Press [illegible] are about to defrost. Be certain to remove any m[illegible]en place the food in your oven and close the oven door.



Press [illegible] once to select the **POULTRY** defrosting programme. "[illegible]isplay.



Enter the [illegible] the frozen food that you are about to defrost.

T[illegible]ay shows "1.4".



Press [illegible]



During [illegible] your oven will "BEEP", at which point open the oven door, turn food over and separate to e[illegible]ove any portions that have thawed or shield them to help slow down thawing. After c[illegible]or and press **START** to resume defrosting.
Your [illegible]p defrosting (even when the beep sounded) unless the door is opened.

Category	Press **AUTO DEFROST**	
AdF 1	1	times
AdF 2	2	times

AUTO WEIGHT DEFROST SEQUENCE LIST

SEQUENCE			FOOD	MIN./MAX. FOOD
AdF-1	MEAT	Lamb	Chops(2.5 cm thick),Rolled roast.	0.1/4.0 kg
		Pork	Chops(1.2 cm thick), Spareribs, Rolled roast, Sausage.	
		Veal	Cutlets(450 g, 1.2 cm thick)	
	POULTRY	Chicken	Whole(under 2 Kg), Cut up Breasts(boneless), Legs.	0.1/4.0 kg
		Turkey	Breasts(under 2.5 Kg)	
	FISH	Fish	Fillets. Steaks, Whole	0.1/4.0 kg
		Shellfish	Crabmeat, Lobster tails, Shrimp, Scallops	
AdF-2	PEA		Take out Refigerated peas & put into Glass/Microwave safe container. For packed peas follow the instruction on the wrapper Put in the Oven. Press Peas defrost button & Rotate the Dial Knob to adjust the weight. Press start. If necessary repeat the process or use quick start function to reach desired results.	0.1/0.5 kg

* The benefit of this Auto Defrost feature is automatic setting and control of defrosting, but just like conventional defrosting you must check the food during the defrosting time.
* For best results, remove meat and poultry from its original paper or plastic package(wrapper). Otherwise, the wrap will hold steam and juice close to the food which can cause the outer surface of the food to cook.
* Place foods in a shallow glass baking dish to catch drippings.
* Food should still be some what icy in the centre when removed from the oven.
* When it is difficult to remove the wrap from the food, defrost the wrapped food for about a quarter of the total defrost time, which is displayed at the beginning of the defrost cycle. Then remove the food from the oven and remove the wrap from the food.
* Sliced pea should be placed between sheets of kitchen towel and pea rolls should be cut in half before defrosting.



More or Less
Cooking

In the following example I will show you how to change the preset AUTO COOK programmes for a longer or shorter cooking time.



If you find that your food is over or undercooked when using the AUTO COOK programme, you can increase or decrease cooking time by turning the DIAL knob.

When cooking without Auto function you can extend the cooking time at any point by turning the DIAL knob.
There is no need to stop the cooking process.

Pr[redacted]



Se[redacted]**COOK** programme.

Sele[redacted]

Press **START**.



Tu[redacted]ase cooking time.
[redacted]ease by **1** second for each turn of the dial.

Turn **DIAL** knob to decrease cooking time.
The cooking time will decrease by **1** second for each turn of the dial.



Use this function to thaw only 0.5kg of Minced meat, Chicken pieces, Fish fillets very quickly.
This will require a standing time to allow the center to thaw. In the following example will show you how to defrost 0.5kg of forzen poultry.

Quick Defrost



Pres[redacted]are about to defrost. Be certain to remove any m[redacted]hen place the food in your oven and close the oven door.



Press **QUICK DEFROST** once.

[redacted]natically without pressing START button.



Du[redacted]oven will "BEEP", at which point open the oven door, turn food over and separate to [redacted]ove any portions that have thawed or shield them to help slow down thawing. After che[redacted]n door and press **START** to resume defrosting.
Your oven will not stop defrosting (even when the beep sounded) unless the door is opened.

Custom
Cook

This feature allows you to set and execute a frequently used single stage programme. Once the cooking programme is set, you can use it by pressing the custom cook key. In the following example I will show you how to set the cooking programme for 10 minutes 30 seconds at power level 720W (80%).



The cooking programme is stored permanently in the memory of your microwave oven.
If you wish to change your CUSTOM COOK, simply enter a new cooking programme.

You can program a different cooking data at the **CUSTOM COOK1, CUSTOM COOK2, CUSTOM COOK3.**

Pres[redacted]



To [redacted]ook.
[redacted]utton, "FA-1" appears on the display.



Press **MICRO/GRILL** button once and press **POWER** once to select 720W (80%) power, "720" appears on the display.



Turn [redacted] dial display shows "10:30"



Press **CUSTOM COOK1** button, "FA-1" will flash.
S[redacted]g the custom cook.



To res[redacted]om cook.
V[redacted]pressing the custom cook key.
Pr[redacted]utton, "FA-1" appears on the display.

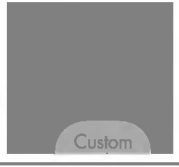



Press **START**.

WARNING

Please ensure cooking times are correctly set as over cooking may result in FIRE and subsequent DAMAGE to the OVEN.

1 Do not attempt to tamper with, or make any adjustments or repairs to the door, control panel, safety interlock switches or any other part of the oven. It is hazardous for anyone to carry out any service or repair operation which involves the removal of any cover which gives protection against exposure to microwave energy. Repairs should only be undertaken by a qualified service technician.

2 Do not operate the oven when empty. It is best to leave a glass of water in the oven when not in use. The water will safely absorb all microwave energy, if the oven is accidentally started.

3 Do not dry clothes in the microwave oven, which may become carbonized or burned if heated too long.

4 Do not cook food wrapped in paper towels, unless your cook book contains instructions, for the food you are cooking.

5 Do not use newspaper in place of paper towels for cooking.

6 Do not use wooden containers. They may heat-up and char. Do not use ceramic containers which have metallic (e.g. gold or silver) inlays. Always remove metal twist ties. Metal objects in the oven may arc, which can cause serious damage.

7 Do not operate the oven with a kitchen towel, a napkin or any other obstruction between the door and the front edges of the oven, which may cause microwave energy leakage.

8 Do not use recycled paper products since they may contain impurities which may cause sparks and/or fires when used in cooking.

9 Do not rinse the turntable by placing it in water just after cooking. This may cause breakage or damage.

10 Small amounts of food require shorter cooking or heating time. If normal times are allowed they may overheat and burn.

11 Be certain to place the oven so the front of the door is 8 cm or more behind the edge of the surface on which it is placed, to avoid accidental tipping of the appliance.

12 Before cooking, pierce the skin of potatoes, apples or any such fruit or vegetable.

13 Do not cook eggs in their shell. Pressure will build up inside the egg which will burst.

14 Do not attempt deep fat frying in your oven.

15 Remove the plastic wrapping from food before cooking or defrosting. Note though that in some cases food should be covered with plastic film, for heating or cooking.

16 If the oven door or door seals are damaged, the oven must not be operated until it has been repaired by a qualified service technician.

17 If smoke is observed, switch off or disconnect the oven from the power supply and keep the oven door closed in order to stifle any flames.

18 When food is heated or cooked in disposable containers of plastic, paper or other combustible materials, check the oven frequently due to the possibility of ignition.

19 Only allow children to use the oven without supervision when adequate instructions have been given so that the child is able to use the oven in a safe way and understands the hazards of improper use.

20 Liquids or other foods must not be heated in sealed containers since they are liable to explode.

Microwave-safe
Utensils

Never use metal or metal trimmed utensils in your microwave oven

Microwaves cannot penetrate metal. They will bounce off any metal object in the oven and cause arcing, an alarming phenomenon that resembles lightning.

Most heat resistant non metallic cooking utensils are safe for use in your microwave oven. However, some may contain materials that render them unsuitable as microwave cookware. If you have any doubts about a particular utensil, there's a simple way to find out if it can be used in your microwave oven.

Place the utensil in question next to a glass bowl filled with water in the microwave oven. Microwave at power HIGH for 1 minute. If the water heats up but the utensil remains cool to the touch, the utensil is microwave~safe. However, if the water does not change temperature but the utensil becomes warm, microwaves are being absorbed by the utensil and it is not safe for use in the microwave oven. You probably have many items on hand in your kitchen right now that can be used as cooking equipment in your microwave oven. Just read through the following checklist.

Dinner plates

Many kinds of dinner-ware are microwave-safe. If in doubt consult the manufacturer's literature or perform the microwave test.

Glassware

Glassware that is heat-resistant is microwave-safe. This would include all brands of oven tempered glass cookware. However, do not use delicate glassware, such as tumblers or wine glasses, as these might shatter as the food warms.

Plastic storage containers

These can be used to hold foods that are to be quickly reheated. However, they should not be used to hold foods that will need considerable time in the oven as hot foods will eventually warp or melt plastic containers.

Paper

Paper plates and containers are convenient and safe to use in your microwave oven, provided that the cooking time is short and foods to be cooked are low in fat and moisture. Paper towels are also very useful for wrapping foods and for lining baking trays in which greasy foods such as bacon are cooked. In general, avoid coloured paper products as the colour may run. Some recycled paper products may contain impurities which could cause arcing or fires when used in the microwave oven.

Plastic cooking bags

Provided they are made specially for cooking, cooking bags are microwave safe. However, be sure to make a slit in the bag so that steam can escape. Never use ordinary plastic bags for cooking in your microwave oven, as they will melt and rupture.

Plastic microwave cookware

A variety of shapes and sizes of microwave cookware are available. For the most part, you can probably use items you already have on hand rather than investing in new kitchen equipment.

Pottery, stoneware and ceramic

Containers made of these materials are usually fine for use in your microwave oven, but they should be tested to be sure.

CAUTION

Some items with high lead or iron content are not suitable for cooking utensils.

Utensils should be checked to ensure that they are suitable for use in microwave ovens.

Food characteristics & Microwave cooking

Keeping an eye on things

The recipes in the book have been formulated with great care, but your success in preparing them depends on how much attention you pay to the food as it cooks. Always watch your food while it cooks. Your microwave oven is equipped with a light that turns on automatically when the oven is in operation so that you can see inside and check the progress of your food. Directions given in recipes to elevate, stir, and the like should be thought of as the minimum steps recommended. If the food seems to be cooking unevenly, simply make the necessary adjustments you think appropriate to correct the problem.

Factors affecting microwave cooking times

Many factors affect cooking times. The temperature of ingredients used in a recipe makes a big difference in cooking times. For example, a cake made with ice-cold butter, milk, and eggs will take considerably longer to bake than one made with ingredients that are at room temperature. All of the recipes in this book give a range of cooking times. In general, you will find that the food remains under-cooked at the lower end of the time range, and you may sometimes want to cook your food beyond the maximum time given, according to personal preference. The governing philosophy of this book is that it is best for a recipe to be conservative in giving cooking times. While overcooked food is ruined for good. Some of the recipes, particularly those for bread, cake, and custards, recommend that food be removed from the oven when they are slightly undercooked. This is not a mistake. When allowed to stand, usually covered, these foods will continue to cook outside of the oven as the heat trapped within the outer portions of the food gradually travels inward. If the food is left in the oven until it is cooked all the way through, the outer portions will become overcooked or even burnt. You will become increasingly skilful in estimating both cooking and standing times for various foods.

Density of food

Light, porous food such as cakes and breads cook more quickly than heavy, dense foods such as roasts and casseroles. You must take care when microwaving porous food that the outer edges do not become dry and brittle.

Height of food

The upper portion of tall food, particularly roasts, will cook more quickly than the lower portion. Therefore, it is wise to turn tall food during cooking, sometimes several times.

Moisture content of food

Since the heat generated from microwaves tends to evaporate moisture, relatively dry food such as roasts and some vegetables should either be sprinkled with water prior to cooking or covered to retain moisture.

Bone and fat content of food

Bones conduct heat and fat cooks more quickly than meat. Care must be taken when cooking bony or fatty cuts of meat that they do not cook unevenly and do not become overcooked.

Quantity of food

The number of microwaves in your oven remains constant regardless of how much food is being cooked. Therefore, the more food you place in the oven, the longer the cooking time. Remember to decrease cooking times by at least one third when halving a recipe.

Shape of food

Microwaves penetrate only about 2.cm into food, the interior portion of thick foods are cooked as the heat generated on the outside travels inward. Only the outer edge of food in cooked by microwave energy; the rest is cooked by conduction. The worst possible shape for a food that is to be microwaved is a thick square. The corners will burn long before the centre is even warm . Round thin foods and ring shaped foods cook successfully in the microwave.

Covering

A cover traps heat and steam which causes food to cook more quickly. Use a lid or microwave cling film with a corner folded back to prevent splitting.

Browning

Meats and poultry that are cooked fifteen minutes or longer will brown lightly in their own fat. Foods that are cooked for a shorter period of time may be brushed with a browning sauce such as worcestershire sauce, soy sauce or barbecue sauce to achieve an appetizing colour. Since relatively small amounts of browning sauces are added to food the original flavour of the recipe is not altered.

Covering with greaseproof paper

Greaseproofing effectively prevents spattering and helps food retain some heat. But because it makes a looser cover than a lid or clingfilm, it allows the food to dry out slightly.

Arranging and spacing

Individual foods such as baked potatoes, small cakes and hors d'oeuvres will heat more evenly if placed in the oven an equal distance apart, preferably in a circular pattern. Never stack foods on top of one another.

Food characteristics &
Microwave cooking

Stirring
Stirring is one of the most important of all microwaving techniques. In conventional cooking, food is stirred for the purpose of blending. Microwaved food, however, is stirred in order to spread and redistribute heat. Always stir from the outside towards the centre as the outside of the food heats first.

Turning over
Large, tall foods such as roasts and whole chickens should be turned so that the top and bottom will cook evenly. It is also a good idea to turn cut up chicken and chops.

Placing thicker portions facing outwards
Since microwaves are attracted to the outside portion of food, it makes sense to place thicker portions of meat, poultry and fish to the outer edge of the baking dish. This way, thicker portions will receive the most microwave energy and the food will cook evenly.

Shielding
Strips of aluminium foil (which block microwaves) can be placed over the corners or edges of square and rectangular foods to prevent those portions from overcooking. Never use too much foil and make sure the foil is secured to the dish or it may cause 'arcing' in the oven.

Elevating
Thick or dense foods can be elevated so that microwaves can be absorbed by the underside and centre of the foods.

Piercing
Foods enclosed in a shell, skin or membrane are likely to burst in the oven unless they are pierced prior to cooking. Such foods include yolks and whites of eggs, clams and oysters and whole vegetables and fruits.

Testing if cooked
Food cooks so quickly in a microwave oven, it is necessary to test it frequently. Some foods are left in the microwave until completely cooked, but most foods, including meats and poultry, are removed from the oven while still slightly undercooked and allowed to finish cooking during standing time. The internal temperature of foods will rise between 5ºF (3ºC) and 15ºF (8ºC) during standing time.

Standing time
Foods are often allowed to stand for 3 to 10 minutes after being removed from the microwave oven. Usually the foods are covered during standing time to retain heat unless they are supposed to be dry in texture (some cakes and biscuits, for example). Standing allows foods to finish cooking and also helps flavour blend and develop.

To Clean Your Oven

1 **Keep the inside of the oven clean**
Food spatters or spilled liquids stick to oven walls and between seal and door surface. It is best to wipe up spillovers with a damp cloth right away. Crumbs and spillovers will absorb microwave energy and lengthen cooking times. Use a damp cloth to wipe out crumbs that fall between the door and the frame. It is important to keep this area clean to assure a tight seal. Remove greasy spatters with a soapy cloth then rinse and dry. Do not use harsh detergent or abrasive cleaners. The glass tray can be washed by hand or in the dishwasher.

2 **Keep the outside of the oven clean**
Clean the outside of your oven with soap and water then with clean water and dry with a soft cloth or paper towel. To prevent damage to the operating parts inside the oven, the water should not be allowed to seep into the ventilation openings. To clean control panel, open the door to prevent oven from accidentally starting, and wipe a damp cloth followed immediately by a dry cloth. Press STOP/CLEAR after cleaning.

3 If steam accumulates inside or around the outside of the oven door, wipe the panels with a soft cloth. This may occur when the microwave oven is operated under high humidity conditions and in no way indicates a malfunction of the unit.

4 The door and door seals should be kept clean. Use only warm, soapy water, rinse then dry thoroughly.
DO NOT USE ABRASIVE MATERIALS, SUCH AS CLEANING POWDERS OR STEEL AND PLASTIC PADS.
Metal parts will be easier to maintain if wiped frequently with a damp cloth.

Questions &
Answers

Q What's wrong when the oven light will not glow?
A There may be several reasons why the oven light will not glow.
Light bulb has blown
Door is not closed

Q Does microwave energy pass through the viewing screen in the door?
A No. The holes, or ports, are made to allow light to pass; they do not let microwave energy through.

Q Why does the beep tone sound when a pad on the Control Panel is touched?
A The beep tone sounds to assure that the setting is being properly entered.

Q Will the microwave oven be damaged if it operates empty?
A Yes Never run it empty or without the glass tray.

Q Why do eggs sometimes pop?
A When baking, frying, or poaching eggs, the yolk may pop due to steam build up inside the yolk membrane. To prevent this, simply pierce the yolk before cooking. Never microwave eggs in the shell.

Q Why is standing time recommended after microwave cooking is over?
A After microwave cooking is finished, food keeps on cooking during standing time. This standing time finishes cooking evenly throughout the food. The amount of standing time depends on the density of the food.

Q Is it possible to pop corn in a microwave oven?
A Yes, if using one of the two methods described below
1 Popcorn-popping utensils designed specifically for microwave cooking.
2 Prepackaged commercial microwave popcorn that contains specific times and power outputs needed for an acceptable final product.

FOLLOW EXACT DIRECTIONS GIVEN BY EACH MANUFACTURER FOR THEIR POPCORN PRODUCT. DO NOT LEAVE THE OVEN UNATTENDED WHILE THE CORN IS BEING POPPED. IF CORN FAILS TO POP AFTER THE SUGGESTED TIMES, DISCONTINUE COOKING. OVERCOOKING COULD RESULT IN THE CORN CATCHING FIRE.

CAUTION
NEVER USE A BROWN PAPER BAG FOR POPPING CORN. NEVER ATTEMPT TO POP LEFTOVER KERNELS.

Q Why doesn't my oven always cook as fast as the cooking guide says?
A Check your cooking guide again to make sure you've followed directions correctly, and to see what might cause variations in cooking time. Cooking guide times and heat settings are suggestions, chosen to help prevent overcooking, the most common problem in getting used to a microwave oven. Variations in the size, shape, weight and dimensions of the food require longer cooking time. Use your own judgement along with the cooking guide suggestions to test food condition, lust as you would do with a conventional cooker.

Plug wiring information/
Technical Specifications

Warning

The wires in this mains lead are colored in accordance with the following codes
BLUE ~ Neutral
BROWN ~ Live
GREEN & YELLOW ~ Earth

As the colours of the wires in the mains lead of this appliance may not correspond with the coloured markings identifying the terminals in your plug proceed as follows:

The wire which is colored BLUE must be connected to the terminal which is marked with the letter N or Colored BLACK.

The wire which is colored BROWN must be connected to the terminal which is marked with the letter L or colored RED.

The wire which is colored GREEN & YELLOW or GREEN must be connected to the terminal which is marked with the letter E or ⏚ .

If the supply cord is damaged, it must be replaced by the manufacturer or its service agent or a similarly qualified person in order to avoid a hazard;

Technical Specification

	MH-657PL
Power Input	230 V AC / 50Hz
Output	900 W (IEC60705 rating standard)
Microwave Frequency	2450 MHz
Outside Dimension	512 mm(W) X 307 mm(H) X 400 mm(D)
Power Consumption	
Microwave	1300 Watts
Grill	1250 Watts
Combination	2500 Watts

LG Electronics Inc.

P/No: 3828W5A2130

Printed in Korea