FFH-185.JA7IDLA(ENG/KR-220A/3828R-A040B)

LG

MICRO AUDIO COMPONENT
OWNER'S MANUAL

MODEL: KR-220A

Please read this manual carefully before operating your set.
Retain it for future reference.

Designs and specifications are subject to change without notice
for improvement.

COMPACT disc DIGITAL AUDIO

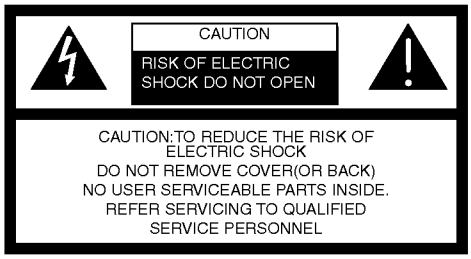

Explanation Graphical Symbols:

The lightning flash with arrowhead symbol, within an equilateral triangle is intended to alert the user to the presence of uninsulated dangerous voltage within the product's enclosure that may be of sufficient magnitude to constitute a risk of electric shock to persons.

The exclamation point within an equilateral triangle is intended to alert the user to the presence of important operating and maintenance(servicing) instructions in the literature accompanying the appliance.

WARNING:

TO REDUCE THE RISK OF FIRE OF ELECTRIC SHOCK, DO NOT EXPOSE THIS APPLIANCE TO RAIN OR MOISTURE.

To avoid electrical shock, do not open the cabinet, Refer servicing to qualified personnel only.

CAUTION

Use of controls or adjustments or performance of procedures other than those specified herein may result in hazardous radiation exposure.

The apparatus shall not be exposed to dripping or splashing and that no abject filled with liquids, such as vases, shall be placed on the apparatus.

Laser component in this product is capable of emitting radiation exceeding the limit for Class 1.

CAUTION:INVISIBLE LASER RADIATION WHEN OPEN AND INTERLOCKS DEFEATED. AVOID EXPOSURE TO BEAM.

VARNING:OSYNLIG LASERSTRÅLNING NÄR DENNA DEL ÄR ÖPPNAD STRÅLEN ÄR FARLIG.

Attention: Quand l'appareil est ouvert, ne pas s'exposer aux radiations invisibles du faisceau laser.

This label is located on the interior.

CLASS 1	**LASER PRODUCT**
KLASSE 1	**LASER PRODUKT**
LUOKAN 1	**LASER LAITE**
KLASS 1	**LASER APPARAT**
CLASSE 1	**PRODUIT LASER**

This Compact Disc player is classified as a CLASS 1 LASER product.
The CLASS 1 LASER PRODUCT label is located on the exterior.

CONTROL LOCATIONS

▶ont View

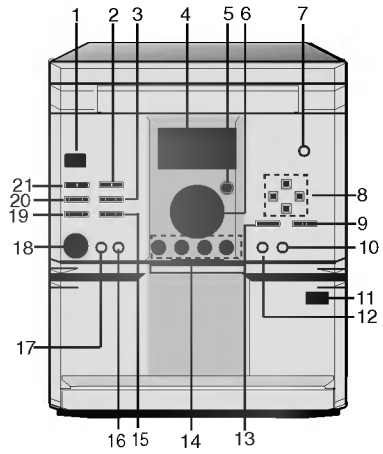

Front view

1. STANDBY/ON BUTTON
2. CD ❚❚ /COUNTER /RDS BUTTON (OPTIONAL)
3. MODE/RIF BUTTON
4. DISPLAY
5. REMOTE SENSOR
6. VOLUME +/-
7. CD DOOR EJECT (OPEN/CLOSE ⏏) BUTTON
8. • TUNING (+)/(-)(▶▶ ▶▶❙ / ❙◀◀ ◀◀) BUTTONS (RADIO)
   • SKIP/SEARCH BUTTONS(CD)
   • REWIND/FAST BUTTONS (TAPE)
   • ◀/▶ =TAPE PLAY DIRECTION BUTTONS (◀: OPTIONAL)
   • PRESET (+)/(-) BUTTONS (RADIO)
   • CD PLAY BUTTON (▶)
9. ■ STOP/CLEAR BUTTON (CD), STOP BUTTON (TAPE)
10. ◷ TIMER BUTTON
11. ⏏ PUSH EJECT POSITION
12. CLOCK BUTTON
13. SET BUTTON
14. FUNCTION SELECTION BUTTON (TUNER/BAND, CD, TAPE, AUX)
15. PROG./MEMO. BUTTON
16. MDSS BUTTON
17. ● REC/❚❚ :RECORD/RECORD PAUSE BUTTON (TAPE)
18. HEADPHONE SOCKET (3.5mm)
19. REPEAT BUTTON
20. CD SYNC. BUTTON
21. • EQ PATT. BUTTON
    • PLAY MODE(⇄ , ⇄), (⇄) BUTTON :OPTIONAL

▶ck View

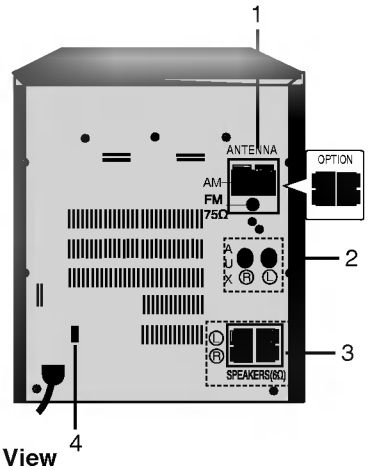

Back View

1. ANTENNA(AERIAL) CONNECTION TERMINALS (page 8 reference)
2. AUXILIARY INPUT SOCKETS
   Connect the audio output RCA (phono) type left/right plugs from your stereo TV or VCR or another Tape deck to the AUX sockets on the back of the unit. (page 9 reference)
3. SPEAKER CONNECTION TERMINALS (page 8 reference)
4. VOLTAGE SELECTOR (OPTIONAL)

DISPLAY

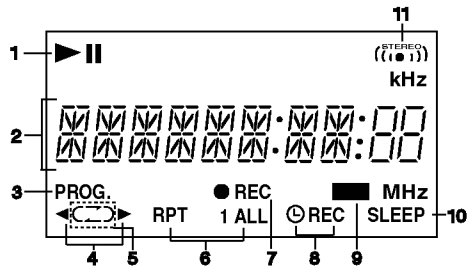

1. PLAY/PAUSE indicator
2. FUNCTION, VOLUME LEVEL,CLOCK, FREQUENCY, TAPE COUNTER, CD PLAYING TIME, MDSS, EQ PATTERN display
3. PROGRAM indicator
4. PLAY DIRECTION indicator
5. PLAY MODE indicator (OPTIONAL)
6. CD REPEAT indicator
7. RECORD indicator
8. TIMER indicator
9. RDS indicator (OPTIONAL)
10. SLEEP indicator
11. FM STEREO indicator

REMOTE CONTROL

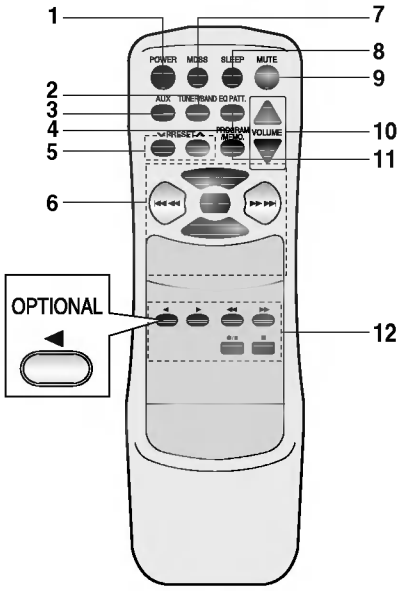

1. POWER button
2. TUNER/BAND button
3. AUX button
4. EQ PATTERN button
5. PRESET (∨/∧) button
6. CD FUNCTION buttons
   - •PLAY/ PAUSE (▶/II) button
   - •STOP/ CLEAR (■) button
   - •SKIP / SEARCH (▶▶ ▶▶I /I◀◀ ◀◀) button
   - •REPEAT button
7. MDSS button
8. SLEEP button
9. MUTE button
10. VOLUME CONTROL (∨/∧) button
11. PROGRAM button
12. TAPE FUNCTION buttons
    - • RECORD / RECORD PAUSE button (●/II)
    - • BACKWARD PLAY button (◀) : OPTIONAL
    - • FORWARD PLAY button (▶)
    - • STOP button (■)
    - • REWIND /FAST button (◀◀ /▶▶)

REMOTE CONTROL

stallation Batteries

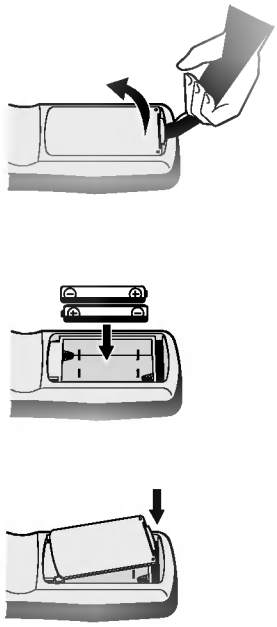

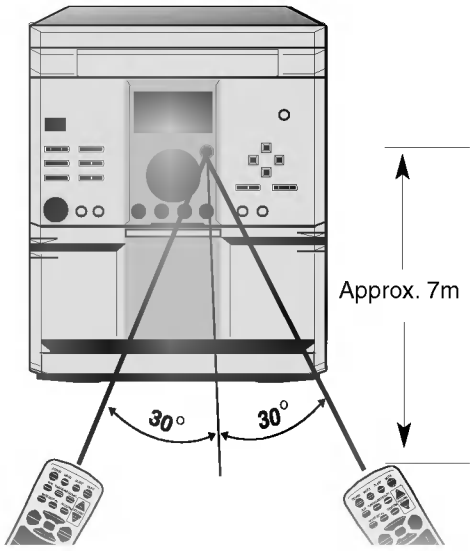

Notes on Batteries

- Your remote control comes with batteries. Use two "AAA (UM-4, IEC R03)" type high quality batteries.
- When the remote control fails to operate accurately at maximum distance from the unit, replace the worn out batteries with new ones.
- Install two "AAA" type batteries, observing correct battery polarity (⊕ and ⊖).
- Do not use different types of batteries together, or an old one with a new one.
- When you are not going to use the unit for a long time, remove the batteries to prevent possible electrolyte leakage.

Range

The remote control device is designed for the range shown in the illustration above.

NOTE:

Strong light or obstacles between the remote control device and the stereo system may interfere with the functioning of the remote control.

CONNECTING THE SPEAKER

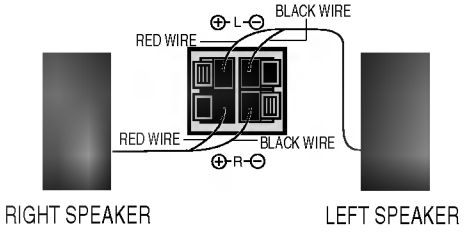

1.Insert the red wire of the right/left hand speaker into the red terminal marked(+) at the back of the unit.
2.Insert the black wire into the black terminal marked(-).

NOTE:

This speaker system is designed for magnetic shielding, but the video image of a nearby television may be distorted.
In this case, move the affected television above 50 cm from the speaker system.

ADJUSTING THE VOLTAGE (OPTIONAL)

If your set is equipped with a voltge selector at the back side, be sure to set it to your local power supplied before connecting the AC power cord.

ANTENNA CONNECTIONS

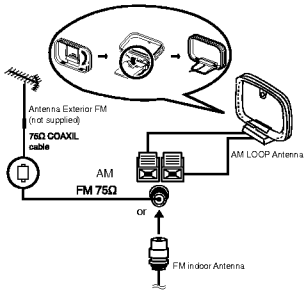

(OPTIONAL)

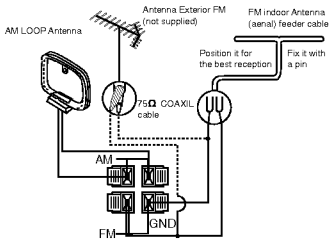

SETTING THE CLOCK

1. Press the "**CLOCK**" button.
   (If the clock is already set, press and hold the "**CLOCK**" button for more than 2 seconds.) - The hours begin to blink.
2. Select a 24 hour cycle or 12 hour cycle by using the "**PRESET (+)/(-)**" buttons.

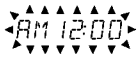

(12HR) or

(24HR)

3. Press the "**SET**" button to confirm the selected hour cycle.
4. Use the "**PRESET (+)/(-)**" buttons to set the correct hours.
5. Press the "**SET**" button.
6. Use the "**PRESET (+)/(-)**" buttons to set the correct minutes.
7. Press the "**SET**" and the correct time is shown on the display.
8. Press the "**CLOCK**" button at any time to display the time for about 3 seconds.

AUDIO ADJUSTMENT

▶lume Adjustment

- Turn "VOLUME" clockwise to increase the sound level, or counterclockwise to decrease it.
- Press "VOLUME ∧ "button to increase the sound level.
  Press "VOLUME ∨ " button to decrease it on the remote control.)

▶und Quality Adjustment

▶To activate stereo sound
You can choose between 4 fixed sound impressions:
select a desired sound mode by using the "**EQ PATT.**" button on the remote
FLAT : linear frequency response
ROCK : more bass, more treble
POP : less bass, less treble
CLASSIC : for orchestral music

▶Headphone Socket.
Connect a stereo headphone plug (3.5mm) into the headphone socket. The speakers are automatically disconnected when you plug in the headphones (not supplied).

▶UTE button (on remote control)

Press this button to mute your unit.
You can mute your unit in order, for example, to answer the telephone.
The "**MUTE**" indicator blinks on the display.

▶SS(Multi Dynamic Sound System)

Press the "**MDSS**" button to reinforce treble (Hi-Tone), bass(UBB: Ultra Bass Booster) and surround effect.
The "MDSS ON" or "MDSS OFF" indicator lights up.
To cancel it press the "**MDSS**" button again.
What is **RDS(Radio Data System)**?

▶S Reception(OPTIONAL)

RDS(Radio Date System) is a system gradually being introduced on FM in many countries, where by an inaudible stream of data is transmitted in addition to the normal radio signal. This data con tains various information including station/ transmitter identification, traffic information and a list of alternative frequencies for the radio station being received.

1. Press the "**TUNER/BAND**" button to select FM.
2. Select a desired station by pressing the "**TUNING(+)/(-)**" button.
3. When the RDS transmission is received, the display shows the program service name (PS) after RDS indicator appears.

NOTES:
- RDS is only available for FM reception.
- The PS(PROGRAM SERVICE) NAME is displayed automatically when a RDS station is received.
- To recall the frequency
  Press the "**RDS**" button.

AUXILIARY FUNCTION

1. Connect an auxiliary device i.e. TV or VCR, via the rear mounted AUX phono sockets.
2. Press the "**AUX**" function button.

NOTE:
You can also record from the auxiliary input source, see Cassette Deck Function Section.

TUNER FUNCTIONS

To listen to the Radio

1. Press the "**TUNER/BAND**" button to select a desired wave band.
2. To tune to the desired station with automatic tuning, keep "**TUNING (+)/(-)** , **(** ▶▶ ▶▶| or |◀◀ ◀◀ **)**" button depressed for more than 1 second.
   To tune to the desired station with manual tuning, press the "**TUNING (+)/(-)** , (▶▶ ▶▶| or |◀◀ ◀◀)" button within 1 second repeatedly.
3. When listening to FM stations, press the "**MODE/RIF**" button for FM stereo reception. The "**STEREO**" will appear in the display.When a weak FM station is being received, press the "**MODE/RIF**" button so that "STEREO"is cleared from the display.

NOTE: Use "**MODE/RIF**" **(Radio Interference Filter)** button to switch to mono reception if stereo reception is distorted by noise. When recording the MW(AM) or LW broadcast, beat noises occur. If it does, press this button once.

Presetting the stations

1. To clear any programme previously stored in any memory
   (1) Press the "**PROG./MEMO.**" button for 2 seconds in TUNER mode so that "**RESET**" flashes in the display.
   (2) Press the "■ **STOP/CLEAR**" button while "**RESET**" is flashing in the display.
2. To memorize the stations in order
   (1) Press the "**TUNER/BAND**" button to select a desired wave band.
   (2) Press the "**TUNING (+)/(-) (** ▶▶ ▶▶| or |◀◀ ◀◀ **)**" button to select a desired station.
   (3) Press the "**PROG./MEMO.**" button and preset number flashes.
   (4) Press the "**PROG./MEMO.**" button again while preset number is flashing.
   (5) Repeat step (1) to (4) to be memorized up to 30 stations.
3. To memorize in selection channel number
   (1) Select a desired station.
   (2) Press the "**PROG./MEMO.**" button.
   (3) Select a desired channel number by pressing the "**PRESET (+)/(-)** or **PRESET** ∧/∨ " button, while the preset number flashes.
   (4) Press the "**PROG./MEMO**" button,while the preset number flashes.
4. To memorize in adding channel number
   (1) Select a desired station.
   (2) Press the "**PROG./MEMO.**" button.
   (3) Press the "**PROG./MEMO**." button. again while the channel number is flashing.
5. To recall presets
   Press and hold the "**PRESET (+)/(-)** or **PRESET** ∧/∨ " button until the desired preset number appears or press it repeatedly.

CD FUNCTIONS

To play a CD

1. Press the 'CD' button repeatedly so that 'CD' appears on the display.
   •If no disc is entered in the disc drawer, the "**NO DISC**" indicator is displayed.
2. Load a disc by using the "**CD DOOR EJECT** ⏏" button.
3. To start play back
   •Press the "**PLAY(▶)**" button on the system or "**PLAY/PAUSE▶/‖**" button on the remote control.

To pause the play

•Press the "**CD‖ /COUNTER**" button on the system or "**PLAY/PAUSE▶/‖**" button on the remote control.

To resume the play

•Press the "**PLAY (▶)**" button, "**CD‖ /COUNTER**" button on the system or "**PLAY/PAUSE▶/‖**" button on the remote control.

To stop playback

•Press the "■ **STOP/CLEAR**" button or "■" button on the remote control.

To specify a track to play

•Press the " ▶▶ ▶▶| or |◀◀ ◀◀ " button repeatedly during stop or play until your desired track number appears-play will start from that track number.

To play a desired location on CD

•Hold down the ◀◀ or ▶▶ button during play or pause.
•When the button is held down, there will be continuous change (of position on the CD).

To repeat play

•Press the "**REPEAT**" button.
•Once, one track will repeat(**RPT 1**).
•Two times, all tracks will repeat(**RPT ALL**).
•Three times, "REPEAT" mode is cancelled.

Programme play (this cannot be set during playback.)

•A maximum of 20 tracks can be programmed.
(1)Press the "**PROG./MEMO.**"or "**PROGRAM**" button in stop status.
(2)Specify a track to play with the ▶▶ ▶▶| or |◀◀ ◀◀ button.
(3)Press the "**PROG./MEMO.**" or "**PROGRAM**" button to store this track.
(4)Repeat step (2) to (3).
(5) Press the "CD PLAY(▶)" button to play the tracks.
(6) To check a programme sequence.
During programmed play press the "■ **STOP/CLEAR**" button, and then press the "**PROG./MEMO.**" or "**PROGRAM**" button repeatedly.
(7) To change an existing programme
a)During stop mode press the "**PROG. /MEMO.**" or "**PROGRAM**" button until the desired program position appears in the display.
b)Select a new track using the ▶▶ ▶▶| or |◀◀ ◀◀ button.
c)Press the "**PROG./MEMO.**"or "**PROGRAM**" button to put the new track in position.
(8)To add a programme
If less than 20 programme positions are in memory, additional tracks may be added by following this procedure.
a) During stop mode press the "**PROG. / MEMO.**" or "**PROGRAM**" button until "00" appears in the track number position on the display.
While the track number "00" is flashing press the "**PROG./MEMO.**" or "**PROGRAM**" button again,this is changed to the CD normal play mode.
b)Select the track to be added by using the ▶▶ ▶▶| or |◀◀ ◀◀ button.
c)Press the "**PROG./MEMO.**" or "**PROGRAM**" button two times.
d)Repeat step b) to c).
e)After the last(20th) track has been entered, press the "**PROG./MEMO.**" or "**PROGRAM**" button once only.
(9)To erase a programme sequence
•In the stop mode press the "**PROG. /MEMO.**" or "**PROGRAM**" button, and then press the "■ **STOP/CLEAR**" button.
•It is also erased if the CD drawer is opened.
(10)If you press the "■ **STOP/CLEAR**" button during programmed play, the "PROGRAM" indicator goes out in the display and the programmed playback is cancelled.
At that time, if you wish to resume the programmed playback press the "**PROG./MEMO.**" or "**PROGRAM**" button and press the PLAY(▶) button.

CASSETTE DECK FUNCTION

1.Tape play

(1)Press the "TAPE" button to enter the tape mode so that "**TAPE**" appears on the display.

(2)Press the "⏏ PUSH EJECT", position to open the cassette door.

(3)Insert a recorded cassette with the exposed tape side down.

(4)Press the "PLAY▶"(or PLAY◀ :OPTIONAL) button to begin tape playback.

(5)To manually change the tape play directions, press the opposite PLAY(◀) button from the direction the tape is currently playing.(optional)

(6)To stop playback at any time, press the "■ **STOP/CLEAR**" button.

2. To select a play mode (reverse mode)

Press the "**PLAY MODE(TAPE)**" button during tape function or recording from another function.(OPTIONAL)

- = forward or backward play once only
- = forward and backward play once only
- = forward and backward play for six times.

3. Tape counter reset function

During tape stop or play press the "**CD II /COUNTER**" button.

4. Recording from Radio, CD or auxiliary source

NOTE : Use only normal tapes.

(1) Insert a blank tape into deck.

(2) Set to tape function by pressing the "TAPE" button.

(3) Select a play mode by pressing the PLAY MODE (TAPE) button. (OPTIONAL)

•If you want to record forward(▶) or backward(◀) only set to .

•If you want to record from forward(▶) to backward(◀) set to or .

(4) Select a function that you want to record and play.

(5) Press the "● **REC/II** " button again. "● **REC**" blinks on the display.

(6) Press the "● **REC/II** " button again to begin recording to the direction of REC ▶ or (◀ : OPTIONAL) indicator or press the ▶or◀ : OPTIONAL) button to begin recording to the selected play direction.

5. CD to tape synchronized recording

NOTE : Use only normal tapes.

(1) Load a disc.

(2) Insert a blank tape into deck.

(3) Select a play mode by pressing the PLAY MODE(TAPE) button repeatedly. In mode you can record forward (▶) only and in or mode you can record from forward(▶) to backward (◀).(OPTIONAL)

(4) Press the "CD" button repeatedly to enter the CD mode so that 'CD' appears on the display.

(5) Press the "**CD SYNC.**" button to start recording.
The CD synchronized recording begins and stops automatically at the end.

NOTE:

When the tape is set to auto reverse backward(◀), the CD will restart the current track from the beginning.

- If you want to record certain titles only, programme these before commencing CD synchronized recording.
- If you want to record from the desired track, select the desired track with the " ▶▶ ▶▶I or I◀◀ ◀◀ " button before commencing CD synchronized recording.

TIMER FUNCTION

With the TIMER function you can have the radio reception and recording, CD play, tape play or auxiliary source play and recording turned on and off at the time desired.

1. Check the current time.

2. Press the "◷ **TIMER**" button to enter the timer setting mode.
   (If you want to correct the previous memorized TIMER, press and hold the "◷ **TIMER**" button more than 2 seconds.)
   The previous memorized timer on time and the "◷" appears in the display. Each function (TUNER-CD-TAPE) flashes in the display in turn.

3. Press the "**SET**" button when the desired function is flashing.

4. If you select the TUNER,
   "REC" and "PLAY" flash in the display alternately for about 3 seconds.
   Press the "**SET**" button to confirm the desired operating mode.
   REC: TUNER recording and play
   PLAY: TUNER play only
   •If you have selected the CD or TAPE ignore step 4.

5. When you have selected the TUNER, Select the previous memorized preset number with the "PRESET (+)/(-)" buttons and press the "**SET**" button. The hour with ON display flashes.
   •If you have selected the CD ,TAPE ignore step 4.

6. Set the hour to switch on by pressing the "**PRESET (+)/(-)**" buttons.

7. Press the "**SET**" button to confirm the hour to switch on. The minute with "ON" display flashes.
8. Set the minute to switch on by pressing the "**PRESET (+)/(-)**" buttons.

9. Press the "**SET**" button to confirm the minute to switch on. The hour with "OFF" now flashes in the display.

10. Set the hour to switch off by pressing the "**PRESET (+)/(-)**" buttons.

11. Press the "**SET**" button.

12. Set the minute to switch off by pressing the "**PRESET (+)/(-)**" buttons.

13. Press the "**SET**" button.

14. Adjust the volume by pressing the "**PRESET (+)/(-)**" buttons.

15. Press the "**SET**" button.
    "◷" appears and the timer setting has been completed.

16. Switch the system off.
    The selected function is automatically switched on and off at the time set.

17. To cancel or check the timer.
    Each time the "◷ **TIMER**" button is pressed you can select the timer set or cancel. You can also check the timer setting status.
    To activate or check the timer, press the "◷ **TIMER**" button so that "◷" lights up in the display.
    To cancel the TIMER, press the timer button so that "◷" in the display disappears.

SLEEP FUNCTION (remote control only)

1. To select the time to turn off
Press the "**SLEEP**" button.
you can see SLEEP 90 for about 5 seconds. This means that the system turns off automatically after 90 minutes.
Each time the button is pressed the time interval before it turns off is reduced by 10 minutes. i.e. 80...70... etc.
Select the desired time to turn off.

2. To check the time to turn off
While the sleep function is active press the "**SLEEP**" button briefly. The time remaining until it turns off is displayed for about 5 seconds.

NOTE:
If you press the "**SLEEP**" button while the sleep time is displayed, the SLEEP time is reset.

3. To turn off the sleep function
If you wish to stop the function press the "**SLEEP**" button repeatedly until 10 appears, and then press the "**SLEEP**" button once again while 10 is displayed.

SPECIFICATION

■ AMP
Output Power(6Ω, 2ch,T.H.D 10%):
20W+20W
Frequency Response: 42~25,000Hz
■ FM
Tuning Range(optional):
87.5~108 MHz or 65~74MHz,
87.5~108MHz
S/N Ratio(98.1 MHz)
:64/55dB(Mono/Stereo)
■ AM(MW)
Tuning Range(optional):
522~1,611kHz, 530~1,720 kHz or
530~1,610 kHz
■ DECK
S/N Ratio: 43dB
Channel Separation: 50dB
■ CD
Frequency Response: 40~18,000Hz
S/N Ratio: 70dB
T.H.D: 0.2%
■ Dimensions(WxHxD):180x248x241mm
■ Weight(net): 4.7 kg
■ Power Requirements:
Refer to the back panel of the unit.
■ Speaker System
Impedance: 6Ω
Rated Input Power: 20W
Max Input Power: 40W
Frequency Response: 70~18,000 Hz
Dimensions(net):
160(W)x248(H)x175(D)mm
Weight(net): 2.02 kg

NOTE:
Designs and specifications are subject to change without notice for improvement.

LG Electronics Inc.

P/NO : 3828R-A040B