LG

http://www.lge.com

MICROWAVE OVEN

OWNER'S MANUAL

PLEASE READ THIS OWNER'S MANUAL THOROUGHLY BEFORE OPERATING.



MS-194W

Precautions

Precautions to avoid possible exposure to excessive microwave energy.

You cannot operate your oven with the door open due to the safety interlocks built into the door mechanism. These safety interlocks automatically switch off any cooking activity when the door is opened; which in the case of a microwave oven could result in harmful exposure to microwave energy.
It is important not to tamper with the safety interlocks.

Do not place any object between the oven front face and the door or allow food or cleaner residue to accumulate on sealing surfaces.

Do not operate your oven if it is damaged. It is particularly important that the oven door closes properly and that there is no damage to the: (1) door(bent), (2) hinges and latches (broken or loosened), (3) door seals and sealing surfaces.

Your oven should not be adjusted or repaired by anyone except qualified service personnel.

The appliance is not intended for use by young children or infirm persons without supervision.

Young Children should be supervised to ensure that they do not play with appliance.

If the appliance is supplied from a cord extension set or an electrical portable outlet device, the cord extension set on electrical portable outlet device must be positioned so that it is not subject to splashing or ingress of moisture.

Warning

When heating liquids, e.g. soups, sauces and beverages in your microwave oven, overheating the liquid beyond boiling point can occur without evidence of bubbling. This could result in a sudden boil over of the hot liquid. To prevent this possibility the following steps should be taken:

1 Avoid using straight sided containers with narrow necks.

2 Do not overheat.

3 Stir the liquid before placing the container in the oven and again halfway through the heating time.

4 After heating, allow to stand in the oven for a short time, stir or shake them again carefully and check the temperature of them before consumption to avoid burns (especially, contents of feeding bottles and baby food jars).
Be careful when handling the container.

Warning

Always allow food to stand after being cooked by microwaves and check the temperature of them before consumption. Especially contents of feeding bottles and baby food jars.

Contents

How the Microwave Oven Works

Microwaves are a form of energy similar to radio and television waves and ordinary daylight. Normally, microwaves spread outwards as they travel through the atmosphere and disappear without effect. Microwave ovens, however, have a magnetron which is designed to make use of the energy in microwaves. Electricity, supplied to the magnetron tube, is used to created microwave energy.

These microwaves enter the cooking area through openings inside the oven. A turntable or tray is located at the bottom of the oven. Microwaves cannot pass through metal walls of the oven, but they can penetrate such materials as glass, porcelain and paper, the materials out of which microwave-safe cooking dishes are constructed.

Microwaves do not heat cookware, though cooking vessels will eventually get hot from the heat generated by the food.

A very safe appliance

Your microwave oven is one of the safest of all home appliances. When the door is opened, the oven automatically stops producing microwaves. Microwave energy is converted completely to heat when it enters food, leaving no "left over" energy to harm you when you eat your food.

Precautions — 2
Contents — 3
Unpacking & Installing — 4 ~ 5
Setting the Clock — 6
Child Lock — 7
Micro Power Cooking — 8
Micro Power Level — 9
Two Stage Cooking — 10
Quick Start — 11
Auto Cook — 12 ~ 13
Auto Defrost — 14 ~ 15
Quick Defrost — 16
More or Less Cooking — 17
Heating or Reheating Guide — 18
Fresh Vegetable Chart — 19
Defrosting Tips — 20
Important safety instructions — 21
Microwave - safe Utensils — 22
Food characteristics & Microwave cooking — 23 ~ 24
Questions & Answers — 25
Plug Wiring Information/ Technical Specifications — 26

Unpacking & Installing

By following the basic steps on these two pages you will be able to quickly check that your oven is operating correctly. Please pay particular attention to the guidance on where to install your oven. When unpacking your oven make sure you remove all accessories and packing. Check to make sure that your oven has not been damaged during delivery.

1 Unpack your oven and place it on a flat level surface.

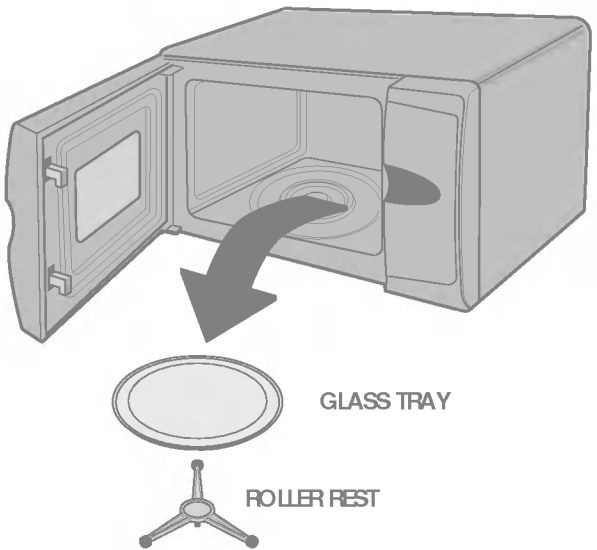

2 Place the oven in the level location of your choice with more than 85cm height but make sure there is at least 30cm of space on the top and 10cm at the rear for proper ventilation. The front of the oven should be at least 8cm from the edge of the surface to prevent tipping.
An exhaust outlet is located on top or side of the oven. Blocking the outlet can damage the oven.

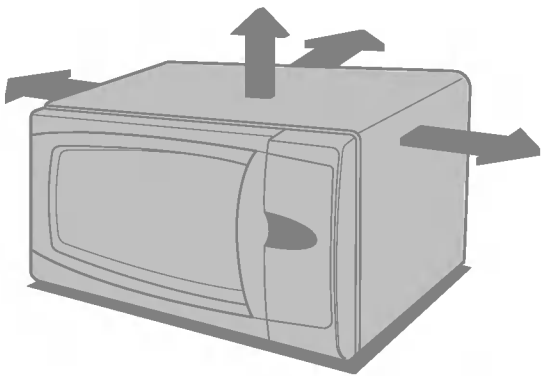

THIS OVEN SHOULD NOT BE USED FOR COMMERCIAL CATERING PURPOSES

3 Plug your oven into a standard household socket. Make sure your oven is the only appliance connected to the socket. **If your oven does not operate properly, unplug it from the electrical socket and then plug it back in.**

4 Open your oven door by pulling the **DOOR HANDLE**. Place the **ROLLER REST** inside the oven and place the **GLASS TRAY** on top.

5 Fill a **microwave safe container** with 300 ml (1/ 2 pint) of water. Place on the **GLASS TRAY** and close the oven door. If you have any doubts about what type of container to use please refer to page 20.

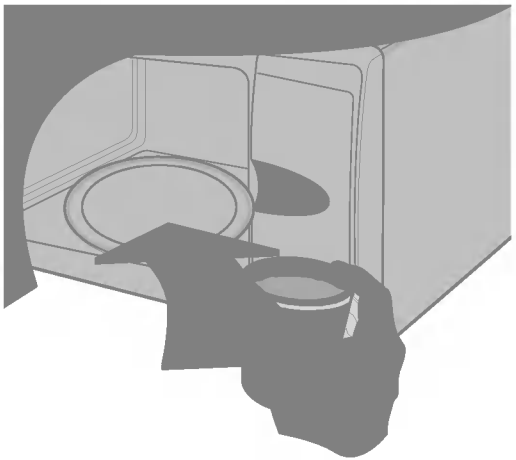

6 Press the **START** button one time to set 30 seconds of cooking time. When you press the button you will hear a BEEP and your oven will start automatically.



7 The **DISPLAY** will count down from 30 seconds. When it reaches 0 it will sound BEEPS. Open the oven door and test the temperature of the water. If your oven is operating the water should be warm. **Be careful when removing the container it may be hot.**



YOUR OVEN IS NOW INSTALLED

Setting the Clock

You can set either 12 hour clock or 24 hour clock.
In the following example I will show you how to set the time for 14:35 when using the 24 clock.
Make sure that you have removed all packaging from your oven.



When your oven is plugged in for the first time or when power resumes after a power cut, a '0' will be shown in the display; you will have to reset the clock.

If the clock (or display) shows any strange looking symbols, unplug your oven from the electrical socket and plug it back in and reset the clock.

During clock setting the colon will flash, After setting, the colon will stop flashing.

1 Make sure you have correctly installed your oven as described earlier in this book.

Press **STOP/ CLEAR.**



2 Press **CLOCK** twice.

(If you want to change a 12 hour clock, Press **CLOCK** once more.
If you want to change different option after setting clock,
you have to unplug and plug it back in.)

3 Press **10 MIN** fifteen times.
Press **1 MIN** five times.
Press **10 SEC** three times.

If the key (10 MIN / 1 MIN / 10 SEC) is pressed and held, the time will increase rapidly.

4 Press **CLOCK** to set the time.

The clock starts counting.

Child Lock



Your oven has a safety feature that prevents accidental running of the oven. Once the child lock is set, you will be unable to use any functions and no cooking can take place.
However your child can still open the oven door!

P



2

Press and hold **STOP** until "**L**" appears on the display and BEEP sounds.
The **CHILD LOCK** is now set.

The time will disappear on the display if you have set the clock.



"L" d to let you know that **CHILD LOCK** is set.



4

To cancel **CHILD LOCK** press and hold **STOP/ CLEAR** until "**L**" disappears.
You will ear EP when it's released.



Micro Power
Cooking

In the following example I will show you how to cook some food on 640 power for 5 minutes and 30 seconds.



Your oven has five microwave Power settings. High power is automatically selected but repeated presses of the **MICRO** button will select different power levels.

POWER	Press **MICRO**	%	
HIGH MAX	1 time	100%	800W
MEDIUM HIGH	2 times	80%	640W
MEDIUM	3 times	60%	480W
DEFROST MEDIUM LOW	4 times	40%	320W
LOW	5 times	20%	160W

1

Make sure that you have correctly installed your oven as described earlier in this book.

Press **STOP/ CLEAR**.



2

Press **MICRO** once to select 640 power.
"**640**" appears in the display.



3

Press **1 MIN** 5 times.
Press **10 SEC** 3 times.



Press **START/ QUICK START**.



Micro Power Level

Your microwave oven is equipped with 5 power levels to give you maximum flexibility and control over cooking. The table below shows the examples of food and their recommended cooking power levels for use with this microwave oven.



HIGH	* Boil Water * Brown minced beef * Cook poultry pieces, fish, vegetables * Cook tender cuts of meat	100%	800W
MEDIUM HIGH	* All reheating * Roast meat and poultry * Cook mushrooms and shellfish * Cook foods containing cheese and eggs	80%	640W
MEDIUM	* Bake cakes and scones * Prepare eggs * Cook custard * Prepare rice, soup	60%	480W
DEFROST/ MEDIUM LOW	* All thawing * Melt butter and chocolate * Cook less tender cuts of meat	40%	320W
LOW	* Soften butter & cheese * Soften ice cream * Raise yeast dough	20%	160W

Two stage
Cooking

In the following example I will show you how to cook some food in two stages. The first stages will cook your food for 11 minutes on HIGH; the second will cook for 35 minutes on 320.



During two stage cooking the oven door can be opened and food checked. Close the oven door and press **START** and the cooking stage will continue.

At the end of stage1, BEEP sounds and stage 2 commences.

Should you wish to clear the programme press **STOP/ CLEAR** twice.

Press



2

Set the ... and the cooking time **for stage1.**

Press M... to select HIGH power.

Press **10 MIN** once.
Press **1 MIN** once.

3

Set the ... and the cooking time **for stage2.**

Press M... four times to select 320 power.

Press **10 MIN** three times.
Press **1 MIN** five times.

P...





The **QUICK START** feature allows you to set 30 seconds intervals of HIGH power cooking with a touch of the **START** key.

Pr



2

Press ST times to select 2 minutes on HIGH power.
Your oven wi rt before you have finished the fourth press.



3

During START cooking, you can extend the cooking time up to 10 minutes b peatedly pressing the **START** key.

Auto
Cook

In the following example I will show you how to cook 0.5 kg of jacket potato.



AUTO COOK allows you to cook most of your favorite food easily by selecting the food type and entering the weight of the food by pressing the MORE/ LESS key.

NOTE:
When cooking vegetables with the AUTO COOK function only microwave mode is used, but when cooking meat, grill and microwave modes are used alternately.

Pr



Press **AUTO COOK** one time.
"Ac-1" appe on the display.



Select eight of potato.
Press **MOR** five times to enter 0.5kg.

If the MORE/ LESS keys are pressed and held, the weight will increase/ decrease rapidly.



Pr



FOOD CATEGORY	FOOD TEMP.	UTENSILS	WEIGHT LIMIT	INSTRUCTIONS
1. JACKET POTATO	Room temp.	Glass tray	0.1 kg ~ 1.0 kg	Wash, dry and prick potato with a fork several times. Place the potato with three pieces of paper towel in the centre of the glass tray. After Cooking, let stand covered with foil for 5 minutes.
2. FRESH VEGETABLE	Room temp.	Glass tray	0.2 kg ~ 0.8 kg	Place prepared vegetables into a suitable sized container (e.g. casserole dish). Add 30 ml water per 200 g vegetables. After Cooking, let stand for 3 minutes.
3. FROZEN VEGETABLE	Frozen	Glass tray	0.2 kg ~ 0.8 kg	Place prepared frozen vegetables into a suitable sized container. Add 30 ml water per 200 g vegetable. Cover and place in the centre of the glass tray. After Cooking, let stand for 3 minutes.

Auto Defrost

The temperature and density of food varies, I would recommend that the food is checked before cooking commences. Pay particular attention to large joints of meat and chicken, some foods should not be completely thawed before cooking. For example fish cooks so quickly that it is sometimes better to begin cooking while still slightly frozen. The BREAD programme is suitable for defrosting small items such as rolls or a small loaf. These will require a standing time to allow the centre to thaw. In the following example I will show you how to defrost 1.4Kg of frozen poultry.



Your oven has four microwave defrost settings:- **MEAT, POULTRY, FISH** and **BREAD**; each defrost category has different power settings. Repeated presses of the **AUTO DEFROST** buttons will select different settings.

Category	Press DEFROST	
MEAT	1	time
POULTRY	2	times
FISH	3	times
BREAD	4	times

Press **STOP/ CLEAR**.
Weigh the food that you are about to defrost. Be certain to remove any metallic ties or wraps; then place the food in your oven and close the oven door.



2

Press **AUTO DEFROST** twice to select the **POULTRY** defrosting programme. "**dEF2**" appears in the display window.



3

Enter the weight of the frozen food that you are about to defrost.

Press MORE four times to enter 1.4 Kg.



Press START.



During defrosting your oven will "BEEP", at which point open the oven door, turn food over and separate to ensure even thawing. Remove any portions that have thawed or shield them to help slow down thawing. After checking close the oven door and press **START** to resume defrosting.
Your oven will not stop defrosting (even when the beep sounds) unless the door is opened.

DEFROSTING GUIDE

* Food to be defrosted should be in a suitable microwave proof container and place uncovered on the glass turntable.
* If necessary, shield small areas of meat or poultry with flat pieces of aluminum foil. This will prevent thin areas becoming warm during defrosting. Ensure the foil does not touch the oven walls.
* Separate items like minced meat, chops, sausages and bacon as soon as possible.
  When BEEP, turn food over. Remove defrosted portions. Continue to defrost remaining pieces.
  After defrosting, allow to stand until completely thawed.
* For example joints of meat and whole chickens should STAND for a minimum of 1 hour before cooking.

Category	Weight Limit	Utensil	Food
Meat **Poultry** **Fish**	0.1 ~ 4.0 kg	Microwave ware (Flat plate)	**Meat** Minced beef, Fillet steak, Cubes for stew, Sirloin steak, Pot roast, Rump roast, Beef burger Pork chops, Lamp chops, Rolled roast, Sausage, Cutlets(.2cm) Turn food over at beep. After defrosting, let stand for 5-15 minutes. **Poultry** Whole chicken, Legs, Breasts, Turkey breasts(under 2.0kg) Turn food over at beep. After defrosting, let stand for 20-30 minutes. **Fish** Fillets, Steaks, Whole fish, Sea foods Turn food over at beep. After defrosting, let stand for 10-20 minutes.
Bread	0.1 ~ 0.5 kg	Paper towel or flat plate	Sliced bread, Buns, Baguette, etc.

Quick Defrost

Use this function to thaw only 0.5kg of Minced meat very quickly.
This will require a standing time to allow the center to thaw. In the following example will show you how to defrost 0.5kg of forzen minced meat.



Press **STOP/ CLEAR**.
Weight the food that you are about to defrost. Be certain to remove any metallic ties or wraps; then place the food in your oven and close the oven door.



2

Press **QUICK DEFROST** to select the **MEAT** defrosting programme.
The oven will start automatically.



During defrosting your oven will "BEEP", at which point open the oven door, turn food over and separate to ensure even thawing. Remove any portions that have thawed or shield them to help slow down thawing. After checking close the oven door and press **START** to resume defrosting.
Your oven will not stop defrosting (even when the beep sounded) unless the door is opened.

QUICK DEFROST GUIDE

Use this function to defrost quickly for minced meet.
Remove the meat completely from its wrapping. Place the mince onto a microwave-safe plate. When beeps, at this point remove the mince from the microwave oven, turn the mince over and return to the microwave oven. Press start to continue. At the end of the program remove the mince from the microwave oven, cover with foil and allow to stand 5-15 minutes or until completely thawed.

Category	*Weight*	*Utensil*	*Instructions*
Minced Meat	0.5kg	Microwave ware (Flat plate)	Minced meat Turn food over at beep. After defrosting, let stand for 5-15 minutes.

In the following example I will show you how to change the preset of Manual cook for a longer or shorter cooking time.

More (+0.1kg) or Less (-0.1kg) Cooking



When manual cooking you can extend the cooking time at any point by using the MORE/ LESS key.
There is no need to stop the cooking process.

Pr



S
Pr



3

Press **MO 0.1kg).**
The cookin e will increase by **10** seconds for each press of the key.

Press **LESS (-0.1kg).**
The cooking time will decrease by **10** seconds for each press of the key.



Heating or Reheating Guide

To heat or reheat successfully in the microwave, it is important to follow several guidelines. Measure the amount of food in order to determine the time needed to reheat. Arrange the food in a circular pattern for best results. Room temperature food will heat faster than refrigerated food. Canned foods should be taken out of the can and placed in a microwavable container. The food will be heated more evenly if covered with a microwavable lid or vented plastic wrap. Remove cover carefully to prevent steam burns. Use the following chart as a guide for reheating cooked food.

Sliced meat 3 slices (0.5cm thick)	1½~2½ minutes	Place sliced meat on microwavable plate. Cover with plastic wrap and vent. • Note: Gravy or sauce helps to keep meat juicy.
Chicken pieces 1 breast 1 leg and thigh	 2~3½ minutes 1½~2½ minutes	 Place chicken pieces on microwavable plate. Cover with plastic wrap and vent.
Fish fillet (170-230g)	1~2½ minutes	Place fish on microwavable plate. Cover with plastic wrap and vent.
Lasagne 1 serving (300g)	 4½~7 minutes	Place lasagne on microwavable plate. Cover with plastic wrap and vent.
Casserole 1 cup 4 cups	 1½~3½ minutes 5~7½ minutes	 COOK covered in microwavable casserole dish. Stir once halfway through cooking.
Casserole cream or cheese 1 cup 4 cups	 1½~3 minutes 4~6½ minutes	 COOK covered in microwavable casserole dish. Stir once halfway through cooking.
Sloppy Joe or Barbecued beef 1 sandwich (1/ 2 cup meat filling) without bun	 1~3 minutes	 Reheat filling and bun separately. Cook filling covered in microwavable casserole dish. Stir once. Heat bun as directed in chart below.

Mashed potatoes 1 cup 4 cups	 2~3½ minutes 6~8½ minutes	 COOK covered in microwavable casserole dish. Stir once halfway through cooking.
Baked beans 1 cup	 2~3½ minutes	COOK covered in microwavable casserole dish. Stir once halfway through cooking.
Ravioli or pasta in sauce 1 cup 4 cups	 3~4½ minutes 8~11½ minutes	 COOK covered in microwavable casserole dish. Stir once halfway through cooking.
Rice 1 cup 4 cups	 1½~2 minutes 4~6 minutes	 COOK covered in microwavable casserole dish. Stir once halfway through cooking.
Sandwich roll or bun 1 roll	 20~35 seconds	 Wrap in paper towel and place on glass tray.
Vegetables 1 cup 4 cups Soup 1 serving (8 oz.)	 1½~3 minutes 4~6 minutes 2~3 minutes	 COOK covered in microwavable casserole dish. Stir once halfway through cooking. COOK covered in microwavable casserole dish. Stir once halfway through cooking.

Fresh Vegetable Chart

Artichokes (230g each)	2 medium 4 medium	5~7 11~12	Trim. Add 2 tsp water and 2 tsp juice. Cover.	2-3 minutes
Asparagus, Fresh, Spears	450g	3~6	Add ½ cup water. Cover.	2-3 minutes
Green Beans	450g	8~11	Add ½ cup water in 1.5 litre casserole dish. Stir halfway through cooking.	2-3 minutes
Beets, Fresh	450g	13~17	Add ½ cup water in 1.5 litre covered casserole dish. Rearrange halfway through cooking.	2-3 minutes
Broccoli, Fresh, Spears	450g	5~7	Place broccoli in baking dish. Add ½ cup water.	2-3 minutes
Cabbage, Fresh, Chopped	450g	6~7	Add ½ cup water in 1.5 litre covered casserole dish. Stir halfway through cooking.	2-3 minutes
Carrots, Fresh, Sliced	200g	3~5	Add ¼ cup water in 1 litre covered casserole dish. Stir halfway through cooking.	2-3 minutes
Cauliflower, Fresh, Whole	450g	8~9	Trim. Add ¼ cup water in 1 litre covered casserole dish. Stir halfway through cooking.	2-3 minutes
Fresh, Flowerettes Celery, Fresh, Sliced	2 cups 4 cups	3~5 8~9	Slice. Add ½ cup water in 1.5 litre covered casserole dish. Stir halfway through cooking.	2-3 minutes

Corn, Fresh	2 ears	5~8	Husk. Add 2 tbsp water in 1.5 litre baking dish. Cover.	2-3 minutes
Mushrooms, Fresh, Sliced	230g	2	Place mushrooms in 1.5 litre covered casserole dish. Stir halfway through cooking.	2-3 minutes
Parsnips, Fresh, Sliced	450g	4~7	Add ½ cup water in 1.5 litre covered casserole dish. Stir halfway through cooking.	2-3 minutes
Peas, Green, Fresh	4 cups	7~9	Add ½ cup water in 1.5 litre covered casserole dish. Stir halfway through cooking.	2-3 minutes
Sweet Potatoes Whole Baking (170..230g each)	2 medium 4 medium	5~9 7~12	Pierce potatoes several times with fork. Place on 2 paper towels. Turn over halfway through cooking.	2-3 minutes 2-3 minutes
White potatoes, Whole Baking (170..230g each)	2 potatoes 4 potatoes	6~7 10~14	Pierce potatoes several times with fork. Place on 2 paper towels. Turn over halfway through cooking.	2-3 minutes 2-3 minutes
Spinach, Fresh, Leaf	450g	5~7	Add ½ cup water in 2 litre covered casserole dish.	2-3 minutes
Courgette, Fresh, Sliced	450g	5~7	Add ½ cup water in 1.5 litre covered casserole dish. Stir halfway through cooking.	2-3 minutes
Courgette, Fresh, Whole	450g	7~9	Pierce. Place on 2 paper towels. Turn courgette over and rearrange halfway through cooking.	2-3 minutes

Defrosting Tips

- You can defrost meats in their original wrapping as long as no metal is present. Remove any metal rings, twist ties, wire or foil.
- Place meat in a shallow baking dish to catch juices.
- Defrost meats only as long as necesssary. Separate items like chops, sausages and bacon as soon as possible. Remove defrosted portions and continue to defrost remaining pieces.
- Whole pieces of meat are ready for standing time as soon as a fork can be pushed into the centre of the meat using moderate pressure. The centre will still be icy. Allow to stand until completely thawed.
- Defrost meat on defrost mode.
- Defrost using MEDIUM LOW/ DEFROST POWER Level (30% or 40%)

MEAT & POULTRY DEFROSTING TABLE

BEEF				
Frankfurter	450g	4-5	5-10	Turn over after half the time.
Minced beef	500g	7-8	5-10	Turn over after two thirds of the time, remove thawed portion.
Steak, sirloin	450g	5-7	5-10	Turn over after half the time. Separate.
Roast, loin(boneless)	1000g	10-15	10-15	Turn over after half the time. Shield as needed.
Patties	4ea (114g)	5-8	5-10	Turn over after half the time.
PORK				
Mince	500g	7-9	5-10	Turn over after two thirds of the time, remove thawed portion.
Chops	450g	5-6	5-10	Separate and turn over once.
Roast, loin(boneless)	1000g	10-15	10-15	Turn over after half the time. Shield as needed.
POULTRY				
Whole Chicken	1000g	18-22	10-15	Separate and rearrange once. Shield as needed.
Breasts (with bone)	450g	5-7	5-10	Separate and rearrange once.
Drumsticks	450g	8-9	5-10	Separate and rearrange once.
Thighs	450g	8-9	5-10	Separate and rearrange once.
Wings	450g	6-8	5-10	Separate and rearrange once.
FISH & SEAFOOD				
Whole fish	450g	6-8	5-10	Turn over after half the time. Shield as needed.
Fish fillelts	500g	7-9	5-10	Separate and rearrange once.
Shrimp	250g	4-6	5-10	Separate and rearrange once.

Important safety instructions

Read carefully and keep for future reference

WARNING

Please ensure cooking times are correctly set as over cooking may result in FIRE and subsequent DAMAGE to the OVEN.

1 Do not attempt to tamper with, or make any adjustments or repairs to the door, control panel, safety interlock switches or any other part of the oven. It is hazardous for anyone to carry out any service or repair operation which involves the removal of any cover which gives protection against exposure to microwave energy. Repairs should only be undertaken by a qualified service technician.

2 Do not operate the oven when empty. It is best to leave a glass of water in the oven when not in use. The water will safely absorb all microwave energy, if the oven is accidentally started.

3 Do not dry clothes in the microwave oven, which may become carbonized or burned if heated too long.

4 Do not cook food wrapped in paper towels, unless your cook book contains instructions, for the food you are cooking.

5 Do not use newspaper in place of paper towels for cooking.

6 Do not use wooden containers. They may heat-up and char. Do not use ceramic containers which have metallic (e.g. gold or silver) inlays. Always remove metal twist ties. Metal objects in the oven may arc, which can cause serious damage.

7 Do not operate the oven with a kitchen towel, a napkin or any other obstruction between the door and the front edges of the oven, which may cause microwave energy leakage.

8 Do not use recycled paper products since they may contain impurities which may cause sparks and/ or fires when used in cooking.

9 Do not rinse the turntable by placing it in water just after cooking. This may cause breakage or damage.

10 Small amounts of food require shorter cooking or heating time. If normal times are allowed they may overheat and burn.

11 Be certain to place the oven so the front of the door is 8 cm or more behind the edge of the surface on which it is placed, to avoid accidental tipping of the appliance.

12 Before cooking, pierce the skin of potatoes, apples or any such fruit or vegetable.

13 Do not cook eggs in their shell. Pressure will build up inside the egg which will burst.

14 Do not attempt deep fat frying in your oven.

15 Remove the plastic wrapping from food before cooking or defrosting. Note though that in some cases food should be covered with plastic film, for heating or cooking.

16 If the oven door or door seals are damaged, the oven must not be operated until it has been repaired by a qualified service technician.

17 If smoke is observed, switch off or disconnect the oven from the power supply and keep the oven door closed in order to stifle any flames.

18 When food is heated or cooked in disposable containers of plastic, paper or other combustible materials, check the oven frequently due to the possibility of the food container is deteriorating.

19 Only allow children to use the oven without supervision when adequate instructions have been given so that the child is able to use the oven in a safe way and understands the hazards of improper use.

20 Liquids or other foods must not be heated in sealed containers since they are liable to explode.

Microwave-safe Utensils

Never use metal or metal trimmed utensils in your microwave oven

Microwaves cannot penetrate metal. They will bounce off any metal object in the oven and cause arcing, an alarming phenomenon that resembles lightning.

Most heat resistant non metallic cooking utensils are safe for use in your microwave oven. However, some may contain materials that render them unsuitable as microwave cookware. If you have any doubts about a particular utensil, there's a simple way to find out if it can be used in your microwave oven.

Place the utensil in question next to a glass bowl filled with water in the microwave oven. Microwave at power HIGH for 1 minute. If the water heats up but the utensil remains cool to the touch, the utensil is microwave~safe. However, if the water does not change temperature but the utensil becomes warm, microwaves are being absorbed by the utensil and it is not safe for use in the microwave oven. You probably have many items on hand in your kitchen right now that can be used as cooking equipment in your microwave oven. Just read through the following checklist.

Dinner plates

Many kinds of dinner-ware are microwave-safe. If in doubt consult the manufacturer's literature or perform the microwave test.

Glassware

Glassware that is heat-resistant is microwave-safe. This would include all brands of oven tempered glass cookware. However, do not use delicate glassware, such as tumblers or wine glasses, as these might shatter as the food warms.

Plastic storage containers

These can be used to hold foods that are to be quickly reheated. However, they should not be used to hold foods that will need considerable time in the oven as hot foods will eventually warp or melt plastic containers.

Paper

Paper plates and containers are convenient and safe to use in your microwave oven, provided that the cooking time is short and foods to be cooked are low in fat and moisture. Paper towels are also very useful for wrapping foods and for lining baking trays in which greasy foods such as bacon are cooked. In general, avoid coloured paper products as the colour may run. Some recycled paper products may contain impurities which could cause arcing or fires when used in the microwave oven.

Plastic cooking bags

Provided they are made specially for cooking, cooking bags are microwave safe. However, be sure to make a slit in the bag so that steam can escape. Never use ordinary plastic bags for cooking in your microwave oven, as they will melt and rupture.

Plastic microwave cookware

A variety of shapes and sizes of microwave cookware are available. For the most part, you can probably use items you already have on hand rather than investing in new kitchen equipment.

Pottery, stoneware and ceramic

Containers made of these materials are usually fine for use in your microwave oven, but they should be tested to be sure.

CAUTION

Some items with high lead or iron content are not suitable for cooking utensils.

Utensils should be checked to ensure that they are suitable for use in microwave ovens.

Food characteristics&
Microwave cooking

Keeping an eye on things

The recipes in the book have been formulated with great care, but your success in preparing them depends on how much attention you pay to the food as it cooks. Always watch your food while it cooks. Your microwave oven is equipped with a light that turns on automatically when the oven is in operation so that you can see inside and check the progress of your food. Directions given in recipes to elevate, stir, and the like should be thought of as the minimum steps recommended. If the food seems to be cooking unevenly, simply make the necessary adjustments you think appropriate to correct the problem.

Factors affecting microwave cooking times

Many factors affect cooking times. The temperature of ingredients used in a recipe makes a big difference in cooking times. For example, a cake made with ice-cold butter, milk, and eggs will take considerably longer to bake than one made with ingredients that are at room temperature. All of the recipes in this book give a range of cooking times. In general, you will find that the food remains under-cooked at the lower end of the time range, and you may sometimes want to cook your food beyond the maximum time given, according to personal preference. The governing philosophy of this book is that it is best for a recipe to be conservative in giving cooking times. While overcooked food is ruined for good. Some of the recipes, particularly those for bread, cake, and custards, recommend that food be removed from the oven when they are slightly undercooked. This is not a mistake. When allowed to stand, usually covered, these foods will continue to cook outside of the oven as the heat trapped within the outer portions of the food gradually travels inward. If the food is left in the oven until it is cooked all the way through, the outer portions will become overcooked or even burnt. You will become increasingly skilful in estimating both cooking and standing times for various foods.

Density of food

Light, porous food such as cakes and breads cook more quickly than heavy, dense foods such as roasts and casseroles. You must take care when microwaving porous food that the outer edges do not become dry and brittle.

Height of food

The upper portion of tall food, particularly roasts, will cook more quickly than the lower portion. Therefore, it is wise to turn tall food during cooking, sometimes several times.

Moisture content of food

Since the heat generated from microwaves tends to evaporate moisture, relatively dry food such as roasts and some vegetables should either be sprinkled with water prior to cooking or covered to retain moisture.

Bone and fat content of food

Bones conduct heat and fat cooks more quickly than meat. Care must be taken when cooking bony or fatty cuts of meat that they do not cook unevenly and do not become overcooked.

Quantity of food

The number of microwaves in your oven remains constant regardless of how much food is being cooked. Therefore, the more food you place in the oven, the longer the cooking time. Remember to decrease cooking times by at least one third when halving a recipe.

Shape of food

Microwaves penetrate only about 2.cm into food, the interior portion of thick foods are cooked as the heat generated on the outside travels inward. Only the outer edge of food in cooked by microwave energy; the rest is cooked by conduction. The worst possible shape for a food that is to be microwaved is a thick square. The corners will burn long before the centre is even warm . Round thin foods and ring shaped foods cook successfully in the microwave.

Covering

A cover traps heat and steam which causes food to cook more quickly. Use a lid or microwave cling film with a corner folded back to prevent splitting.

Browning

Meats and poultry that are cooked fifteen minutes or longer will brown lightly in their own fat. Food that are cooked for a shorter period of time may be brushed with a browning sauce such as worcestershire sauce, soy sauce or barbecue sauce to achieve an appetizing colour. Since relatively small amounts of browning sauces are added to food the original flavour of the recipe is not altered.

Covering with greaseproof paper

Greaseproofing effectively prevents spattering and helps food retain some heat. But because it makes a looser cover than a lid or clingfilm, it allows the food to dry out slightly.

Arranging and spacing

Individual foods such as baked potatoes, small cakes and hors d'oeuvres will heat more evenly if placed in the oven an equal distance apart, preferably in a circular pattern. Never stack foods on top of one another.

Stirring
Stirring is one of the most important of all microwaving techniques. In conventional cooking, food is stirred for the purpose of blending. Microwaved food, however, is stirred in order to spread and redistribute heat. Always stir from the outside towards the centre as the outside of the food heats first.

Turning over
Large, tall foods such as roasts and whole chickens should be turned so that the top and bottom will cook evenly. It is also a good idea to turn cut up chicken and chops.

Placing thicker portions facing outwards
Since microwaves are attracted to the outside portion of food, it makes sense to place thicker portions of meat, poultry and fish to the outer edge of the baking dish. This way, thicker portions will receive the most microwave energy and the food will cook evenly.

Shielding
Strips of aluminium foil (which block microwaves) can be placed over the corners or edges of square and rectangular foods to prevent those portions from overcooking. Never use too much foil and make sure the foil is secured to the dish or it may cause 'arcing' in the oven.

Elevating
Thick or dense foods can be elevated so that microwaves can be absorbed by the underside and centre of the foods.

Piercing
Foods enclosed in a shell, skin or membrane are likely to burst in the oven unless they are pierced prior to cooking. Such foods include yolks and whites of eggs, clams and oysters and whole vegetables and fruits.

Testing if cooked
Food cooks so quickly in a microwave oven, it is necessary to test it frequently. Some foods are left in the microwave until completely cooked, but most foods, including meats and poultry, are removed from the oven while still slightly undercooked and allowed to finish cooking during standing time. The internal temperature of foods will rise between 5°F (3°C) and 15°F (8°C) during standing time.

Standing time
Foods are often allowed to stand for 3 to 10 minutes after being removed from the microwave oven. Usually the foods are covered during standing time to retain heat unless they are supposed to be dry in texture (some cakes and biscuits, for example). Standing allows foods to finish cooking and also helps flavour blend and develop.

To Clean Your Oven

1 Keep the inside of the oven clean
Food spatters or spilled liquids stick to oven walls and between seal and door surface. It is best to wipe up spillovers with a damp cloth right away. Crumbs and spillovers will absorb microwave energy and lengthen cooking times. Use a damp cloth to wipe out crumbs that fall between the door and the frame. It is important to keep this area clean to assure a tight seal. Remove greasy spatters with a soapy cloth then rinse and dry. Do not use harsh detergent or abrasive cleaners. The glass tray can be washed by hand or in the dishwasher.

2 Keep the outside of the oven clean
Clean the outside of your oven with soap and water then with clean water and dry with a soft cloth or paper towel. To prevent damage to the operating parts inside the oven, the water should not be allowed to seep into the ventilation openings. To clean control panel, open the door to prevent oven from accidentally starting, and wipe a damp cloth followed immediately by a dry cloth. Press STOP/ CLEAR after deaning.

3 If steam accumulates inside or around the outside of the oven door, wipe the panels with a soft cloth. This may occur when the microwave oven is operated under high humidity conditions and in no way indicates a malfunction of the unit.

4 The door and door seals should be kept clean. Use only warm, soapy water, rinse then dry thoroughly.
DO NOT USE ABRASIVE MATERIALS, SUCH AS CLEANING POWDERS OR STEEL AND PLASTIC PADS.
Metal parts will be easier to maintain if wiped frequently with a damp cloth.

Questions &
Answers

Q What's wrong when the oven light will not glow?
A There may be several reasons why the oven light will not glow.
Light bulb has blown
Door is not closed

Q Does microwave energy pass through the viewing screen in the door?
A No. The holes, or ports, are made to allow light to pass; they do not let microwave energy through.

Q Why does the beep tone sound when a pad on the Control Panel is touched?
A The beep tone sounds to assure that the setting is being properly entered.

Q Will the microwave oven be damaged if it operates empty?
A Yes Never run it empty or without the glass tray.

Q Why do eggs sometimes pop?
A When baking, frying, or poaching eggs, the yolk may pop due to steam build up inside the yolk membrane. To prevent this, simply pierce the yolk before cooking. Never microwave eggs in the shell.

Q Why is standing time recommended after microwave cooking is over?
A After microwave cooking is finished, food keeps on cooking during standing time. This standing time finishes cooking evenly throughout the food. The amount of standing time depends on the density of the food.

Q Is it possible to pop corn in a microwave oven?
A Yes, if using one of the two methods described below
1 Popcorn-popping utensils designed specifically for microwave cooking.
2 Prepackaged commercial microwave popcorn that contains specific times and power outputs needed for an acceptable final product.

FOLLOW EXACT DIRECTIONS GIVEN BY EACH MANUFACTURER FOR THEIR POPCORN PRODUCT. DO NOT LEAVE THE OVEN UNATTENDED WHILE THE CORN IS BEING POPPED. IF CORN FAILS TO POP AFTER THE SUGGESTED TIMES, DISCONTINUE COOKING. OVERCOOKING COULD RESULT IN THE CORN CATCHING FIRE.

CAUTION
NEVER USE A BROWN PAPER BAG FOR POPPING CORN. NEVER ATTEMPT TO POP LEFTOVER KERNELS.

Q Why doesn't my oven always cook as fast as the cooking guide says?
A Check your cooking guide again to make sure you've followed directions correctly, and to see what might cause variations in cooking time. Cooking guide times and heat settings are suggestions, chosen to help prevent overcooking, the most common problem in getting used to a microwave oven. Variations in the size, shape, weight and dimensions of the food require longer cooking time. Use your own judgement along with the cooking guide suggestions to test food condition, lust as you would do with a conventional cooker.

Warning

The wires in this mains lead are colored in accordance with the following codes
BLUE ~ Neutral
BROWN ~ Live
GREEN & YELLOW ~ Earth

As the colours of the wires in the mains lead of this appliance may not correspond with the coloured markings identifying the terminals in your plug proceed as follows:

The wire which is colored BLUE must be connected to the terminal which is marked with the letter N or Colored BLACK.

The wire which is colored BROWN must be connected to the terminal which is marked with the letter L or colored RED.

The wire which is colored GREEN & YELLOW or GREEN must be connected to the terminal which is marked with the letter E or ⏚.

If the supply cord is damaged, it must be replaced by the manufacturer or its service agent or a similarly qualified person in order to avoid a hazard;

Technical Specification

	MS-194W
Power Input	230/ 240 V AC / 50 Hz
Output	800 W (IEC60705 rating standard)
Microwave Frequency	2450 MHz
Outside Dimension	455mm (W) x 281mm (H) x 325mm (D)
Power Consumption	1200 Watts

If the supplied flexible mains cord of this appliance is damaged, it must be raplaced using the special mains cord part number 6411W1A015A



P/ No: 3828W5A3481

Printed in China