LG

CD-R/RW Drive

Owner's Manual

To enjoy fully all the features and functions of your product, please read this owner's manual carefully and completely.



GCE-8522B

CAUTION : The laser used in the CD-R/RW drive can damage your eyes.
Do not attempt to open the cover.
To reduce the risk of electric shock, do not remove cover (or back).
No user-serviceable parts inside.
Refer servicing to qualified service personnel.

Use of controls or performance of procedures other than those specified herein may result in hazardous radiation exposure.

WARNING : To reduce the risk of fire or electric shock, do not expose this appliance to rain or moisture

Industry Canada requirement

This class B digital apparatus meets all requirements of the Canadian Interference-Causing Equipment Regulations.

Cet appareil numérique de la classe B respecte toutes les exigences du Règlement sur le matériel brouilleur du Canada.

FCC COMPLIANCE STATEMENT

Note : This equipment has been tested and found to comply with the limits for a Class B digital device, pursuant to Part 15 of the FCC Rules.
These limits are designed to provide reasonable protection against harmful interference in a residential installation. This equipment generates, uses, and can radiate radio frequency energy and, if not installed and used in accordance with the instructions, may cause harmful interference to radio communications.
However, there is no guarantee that interference will not occur in a particular installation.
If this equipment does cause harmful interference to radio or television reception, which can be determined by turning the equipment off and on, the user is encouraged to try to correct the interference by one or more of the following measures:

- Reorient or relocate the receiving antenna.
- Increase the separation between the equipment and receiver.
- Connect the equipment into an outlet on a circuit different from that to which the receiver is connected.
- Consult the dealer or an Authorized Service Center for help.

- FCC WARNING
  Changes or modifications not expressly approved by the party responsible for compliance could void the user's authority to operate the equipment.
- This CD-R/RW Drive is for use only with UL listed personal computers that have installation instructions detailing user-installation of card cage accessory.

This product is manufactured to comply with the radio interference requirements of EEC DIRECTIVE 89/336/EEC, 93/68/EEC and 73/23/EEC.

CAUTION - INVISIBLE LASER RADIATION WHEN OPEN AVOID EXPOSURE TO BEAM.

VARNING-OSYNLIG LASERSTRÄLNING NÄR DENNA DEL ÄR ÖPPNAD STRÄLEN ÄR FARLIG.

CLASS 1	**LASER PRODUCT**
KLASSE 1	**LASER PRODUKT**
LUOKAN 1	**LASER LAITE**
KLASS 1	**LASER APPARAT**

This unit uses CD-ROM discs with the following mark

When you use this unit as a CD player, use compact discs with the following mark

This unit uses CD-R discs with the following mark.

This unit uses CD-RW discs with the following mark.

This unit uses High Speed CD-RW discs with the following mark

This unit uses Ultra Speed CD-RW discs with the following mark.

WARNING: Only CD-RW drivers bearing the logo Compact Disc ReWritable Ultra Speed can write or erase Ultra Speed CD-RW media.

Ultra Speed CD-RW Media may be recognized by the same Compact Disc ReWritable Ultra Speed logo on the disc label or packaging material.

Attempted writes to Ultra Speed CD-RW media using CD-RW drives NOT bearing the logo Compact Disc ReWritable Ultra Speed may result in data loss.

Contents

Introduction

Features 2
Important Precautions 3
System Environment 4
Location and Function of Controls 5

Installation

Installing the Drive 6
Device Drivers 11

Operation

How to Use the Discs 12

Appendix

Troubleshooting 13
Read Speed Control for CD-R Data CD 14
Specifications 15

- Microsoft® and Windows® are trademarks registered in the United States and other countries by the Microsoft Corporation.
- The company names and product names written in this manual are trademarks or registered trademarks of the respective companies.

Thank you for purchasing this CD-R/RW Drive.

Features

- Enhanced-IDE (ATAPI) interface.
- Power tray loading and ejection of disc. (The disc can also be ejected manually.)
- The recorded CD-RW media can be played in a DVD player or a multiread CD-ROM Player, maintaining future compatibility
- Supports Windows 95/98/2000/ME/XP & NT 4.0.
- Supports Mt. Rainier.
- Automatic buffer underrun error prevention technology-Burn proof
- 52X max Writing (CD-R), 24X max Rewriting (CD-RW), 16X max Rewriting (CD-RW packet writing), and 52X max reading(CD-ROM)*.

* Writing speed depends on capabilities of discs.
For Ultra speed write/rewrite, you should use media labelled Ultra Speed Writable/ReWritable discs.

CAV technology & Optimum Write Speed control

This drive is equipped with CAV technology, so the CD-R write speed can change in the range of 22X - 52X max according to the type of the disc. In this optimum write control system, the drive automatically selects the best recording speed for the inserted media.

Package Items

Item	Quantity
- Internal CD-R/RW Drive	1
- CD Recording Software	1
- E-IDE (ATAPI) cable	1
- Audio Cable	1
- Mounting Screws	4
- Manual for CD-R/RW Drive	1
- Manual for CD Recording Software	1

Important Precautions

Follow these precautions when handling the drive or discs.

Precautions

- Please take notice that the manufacturer of this equipment does not offer any warranty against data loss due to inappropriate installation or handling or direct or indirect damages.
- Please take notice that the manufacturer will bear no responsibility for direct or indirect damages caused by the use of this product or its malfunction.
- Please take notice that the manufacturer will bear no responsibility for damage to data caused by this product.
- Please backup (copy) all important data as protection against data loss.

Installation

- Avoid placing the drive in a location subject to:
  - high humidity
  - high temperature
  - excessive dust
  - mechanical vibration
  - direct sunlight

We recommend using the drive in a horizontal or vertical position.
Do not install the drive at an angle.

Operation

- Don't move the drive suddenly from a cold place to a warm one or raise the room temperature suddenly. Condensation may occur, causing abnormal operation.
- Make sure to remove the disc before moving the drive. The disc may be damaged, causing data loss.
- Be careful to prevent foreign objects, such as liquids or metal, from entering the drive. In case a foreign object enters the drive, please consult the dealer where the drive was purchased.
- Don't interrupt the electric power while the drive is operating.
- When connecting two IDE devices to the Primary or Secondary connectors, make sure that the two devices are not configured as both Master, or both Slave. If they are both set the same, Windows may fail to run or recognize the drives.
- The total length of the IDE cable should be no more than 18 inches (about 45 cm).

System Environment

Computer

This unit can be operated in the system environment explained here.

System requirements	CPU	350MHz (or faster) Pentium (for high speed, 500MHz or faster recommended)
	Memory	Windows 95/98/ME : 64MB or greater. Windows NT Workstation Ver. 4.0: 64MB or greater (128MB or over recommended) Windows 2000/XP: 128MB or greater(256MB or over recommended)
Hard disk		700MB or more free space. (The free space needed for writing depends on the quantity of data.)
Interface		Enhanced-IDE interface (as Primary Slave, Secondary Master or Slave)
Drive bay		5.25-inch half-height bay required
Power		+5V/+12V power socket required
Software Required OS		Windows 95/98/2000/ME/XP, Windows NT Workstation Ver.4.0 or later
CD-R, CD-RW discs		**CD-R** : LG, Ricoh, Mitsubishi Chemical, Taiyo Yuden, Fuji Film, CMC, Mitsui or SKC discs are recommended. (For 52X-700MB: CMC, SKC, Ritek, Fuji Film, Ricoh, Daxon, Maxell, Plasmon, MBI) **CD-RW** : Ricoh, Mitsubishi chemical, TDK, Fuji Film, Sony discs are recommended.

❑ Occasionally the CD-R and CD-RW discs written by the CD-R/RW drive cannot be read by other CD drives*.
These unreadable discs may need to be read using the CD-R/RW drive on that did the original writing.

* The disc written using the CD-R/RW drive might not be readable by CD-ROM drives other than Multi-read compatible (UDF compatible) CD-ROM drives.

Multiread compatible (UDF compatible) CD-ROM drives are:

1. CD-ROM drives that can read low reflectance.
2. CD-ROM drives that support Packet Write.

Software

Install the supplied CD Recording Software before using this unit.

Location and Function of Controls

Front Panel

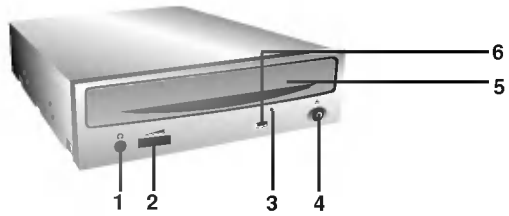

1. **Headphone Jack**
2. **Volume Control**
3. **Emergency Eject Hole**
4. **Stop/Eject Button**
5. **Disc Tray**
6. **Drive activity indicator (Read/Write)**

Rear Panel



1. **Digital Audio Output Connector**
2. **Analog Audio Output Connector**
3. **Jumper Connector**
   This jumper determines whether the drive is configured as a master or slave. Changing the master-slave configuration takes effect after power-on reset.
4. **IDE Interface Connector**
   Connect to the IDE (Integrated Device Electronics) Interface using a 40-pin flat IDE cable.
   NOTE : Do not connect or disconnect the cable when the power is on, as this could cause a short circuit and damage the system. Always turn the power OFF when connecting or disconnecting the cable.
5. **Power Connector**

Installing the Drive

Before Installation

Before installing the drive, please note the following points.

- You will need the following:
  - A screw driver of a suitable size to fit the securing screws for the drive unit.
  - The manual for the computer, so you can find the mounting positions for the IDE controller cable.
- Turn off all peripheral appliances of the computer and the computer itself, and disconnect their power cords from the wall sockets.
- Discharge any static electricity on your person by touching the computer covers, etc.

Removing the Computer Cover

Make sure all peripheral devices of the computer and the computer itself are turned off, and then remove the cover. Refer to the manual for the computer for details about removing the cover.

NOTE : There may be sharp edges inside the computer so take care to avoid injury.

Mounting the Drive

1. Remove the 5¼" drive bay panel from the computer. Refer to the manual for the computer for details.
2. Insert the drive unit into the bay. Do not apply excessive pressure to the cables inside the computer.
3. Secure the drive with the screws provided. If there is not enough space behind the drive, connect the IDE and other cables before securing the drive.

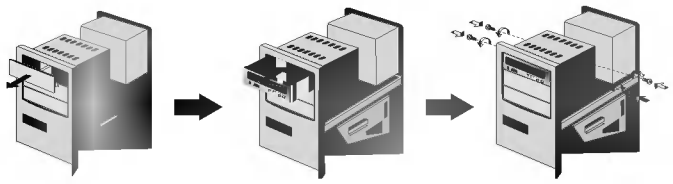

NOTE : This is a general installation guide. If your PC hardware appears different, please consult your hardware manual for installing peripheral devices.

Jumper Setup

Before installation, set the jumper on the jumper connector on the rear panel.
The drive can be connected as the Master or Slave on an EIDE (ATAPI) interface. When several (up to four) EIDE devices are connected, each must be set in a unique way. Specific knowledge of hardware and software is necessary to install the drive.

NOTE : If two peripheral devices with the same settings are both connected to the Primary or to the Secondary EIDE bus, the host computer may fail to run or may malfunction. Careful attention is necessary.

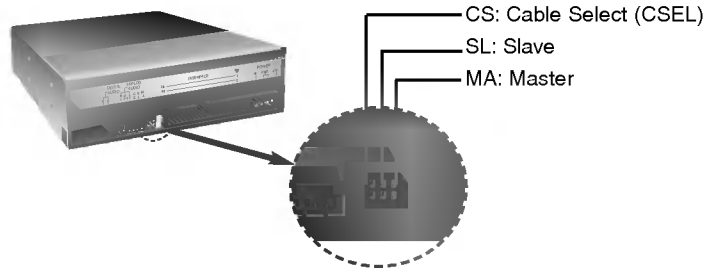

NOTE : Only one jumper should be installed on the jumper connector. If more than one jumper is installed, the drive may malfunction or be damaged.

Master/Slave setting is determined by jumper installation on the Jumper Connector. The following table shows the possible jumper settings.

Name	Function	CS	SL	MA
MA (Master)	Drive set as Master	○ ○	○ ○	▮
SL (Slave)	Drive set as Slave	○ ○	▮	○ ○
CS (Cable Select)	Drive mode set by CSEL on the host IDE interface	▮	○ ○	○ ○

If you use CSEL setting, the MASTER/SLAVE setting will be made automatically, depending on the hardware configuration.
For details refer to the manual of your computer.

PC Connection

The CD-R/RW drive connects to the motherboard of the host computer using an IDE interface cable. You may connect the CD-R/RW Drive as a Slave or Master device, depending on your computer.

To Install as a Master Drive

To install the drive as a Master, the jumper can be left as supplied from the factory.

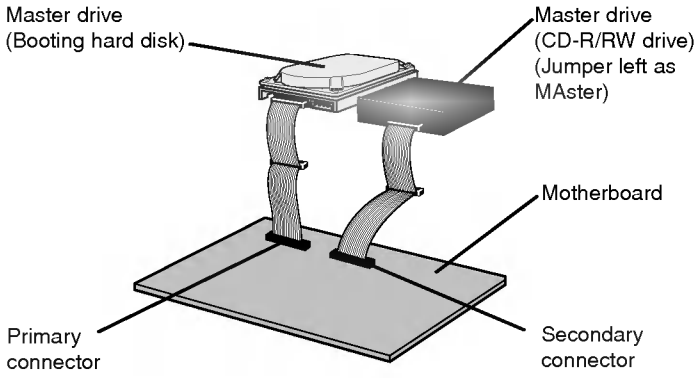

- OR -

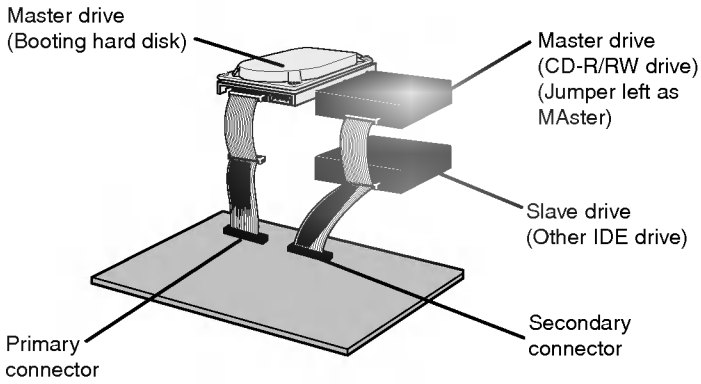

NOTE : A hard disk is normally installed as the Primary Master on the EIDE (ATAPI) interface. Other EIDE peripheral devices such as hard drives and CD-ROMs are then set differently.

To Install as a Slave Drive

To install the drive as a Slave, change the jumper setting on the rear panel to SL.

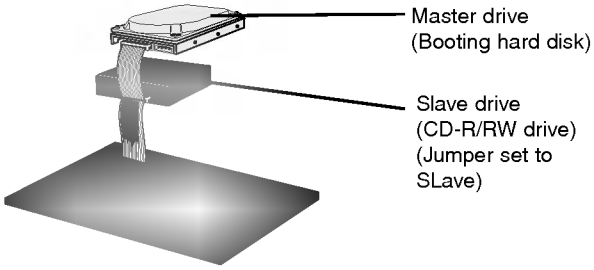

- OR -

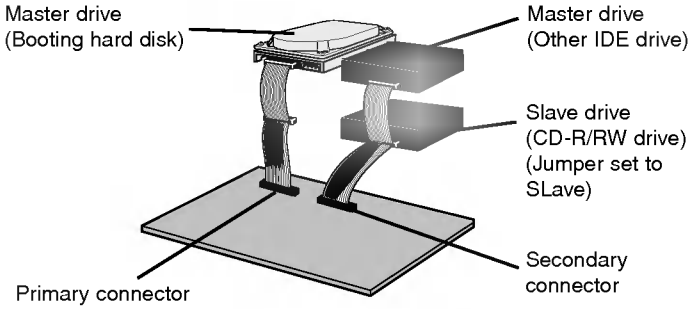

Connecting the Power Connector

Connect the power cable from the computer's power supply to the socket on the drive unit, fitting the connector firmly into the power in connector. If there is no spare power cable available in the computer, you will have to purchase a splitter cable of a suitable type.

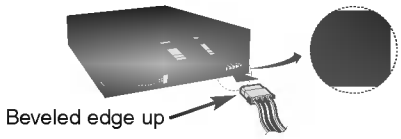

NOTE : Improper connection may damage the drive and void the warranty. Generally, the power connector can only fit one way.

Connecting the Interface Connector

Connect the 40-pin IDE cable to the back of the CD-R/RW Drive, making sure the coloured (red) stripe on the IDE cable is connected to pin 1 on the CD-R/RW drive. Pin 1 is closest to the Power Connector.

NOTE : Generally, the IDE connector is keyed and will only fit one way.

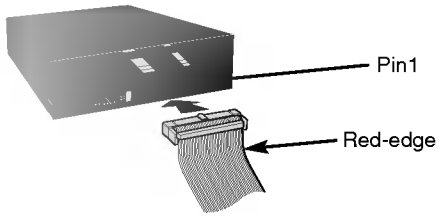

Connecting the Sound Card

If the computer is using a sound card, the drive is connected to the sound card with an audio cable. The supplied analog audio cable fits most sound cards or one can be purchased at a local computer store.

> Refer to the manual for the sound card for detailed information regarding connection.

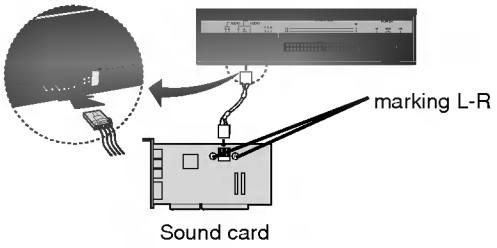

Replacing the Computer Cover

When the installation of the drive unit is complete, replace the computer cover

Device Drivers

When using Windows 95/98/2000/ME/XP or Window NT Workstation Ver. 4.0, no special device driver is required. Your system, upon Power On and bootup after installing and connecting the new CD-RW drive, will recognize and load native software drivers automatically.

The DOS and Windows 3.1 users can download the DOS Device drivers anytime via internet.

For your information, please consult the following internet sites:

http://www.lge.com

http://www.lgeservice.com/drivers.html

For Windows 95/98/2000/ME/ XP Users

- In order to ensure normal drive operation, please check the following:
  - The drive is displayed in
    Windows 95/98/ME : [Control Panel]-[System]-[Device Manager]-[CD-ROM]
    Windows 2000/XP : [Control Panel]-[System]-[Hardware]-[Device Manager]-[DVD/CD-ROM-Drive]
  - 32-bit is displayed in
    [Control Panel]-[System]-[Performance]
- If the drive is not recognized by your computer, please check the following items.
  - If an ❗ indicator is displayed on the IDE controller in [Control Panel]-[System]-[Devices Manager]-[Hard Disk Controller], you will need to contact your PC's manufacturer or the motherboard's manufacturer and get the appropriate IDE controller driver.
- Run **Add New Hardware** in Control Panel to let PC search again for new device.

For Windows NT Workstation Ver.4.0 Users

- In order to ensure normal drive operation, please check to see if the drive is displayed on the IDE controller in [Control Panel]-[SCSI Adapter]-[Devices]
- If the drive is not recognized by your computer, an ❗ indicator is displayed on the IDE controller in [Control Panel]-[SCSI Adapter]-[Devices], you will need to contact your PC's manufacturer or the motherboard's manufacturer and get the appropriate IDE controller driver.

How to Use the Discs

When using CD-ROM discs, CD-R discs or CD-RW discs, don't attach any stickers or labels to the discs. Using discs with them attached not only causes read and write errors, but data on the disc may be lost due to damage to the disc itself.

The Discs in this unit operate at a very high speed!
DO NOT use damaged, cracked or warped discs. The drive's optical unit may be damaged if they break.

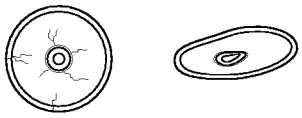

DO NOT use non-standard discs. NON-standard discs may not play or store data properly.
Non-standard discs are any discs that are not the standard 12 cm CD type discs. This includes 8 cm discs, Sony Walkman™ discs, non-circular discs including promotional, business card discs, and other unusual discs.

Emergency Eject

This drive has a feature that allows the CD to be ejected manually if necessary in an emergency, such as failure of the drive or a power outage.

NOTE: Don't use this feature **except** in an emergency.

1) Turn the power to OFF.
2) Poke a fine-tipped object (such as a straightened heavy duty paper clip) into the small hole above the eject button. The front door will pop open and the disk tray will come partway out.
3) Pull the front door to open it all the way, then grip the disc tray between thumb and forefinger and gently pull it straight out.



NOTE: This feature is a last measure to be used only in an emergency. Using it excessively will cause malfunction.

* If you cannot get a good grip on the disc tray with your fingers, use a steel binder clip or spring clamp to pull it out.

Troubleshooting

Before Requesting Service

Before calling for service, check this list.

- The drive doesn't have power.
  - Is the power supply cable from the host computer plugged in?
  - Is the Power Connector to the drive securely attached?

- The system doesn't start.
  - Are the Primary and Secondary connections and the Master and Slave settings correct?
  - Is the total length of the IDE cable 18 inches or less?
  - Is each connector completely attached? Movement of the PC may loosen connections.

- Cannot Read or Write Discs.
  - Is the condition of everything else in the system (CPU, hard disc, and others) as it should be? (See system environment, page 4.)
  - Does the CD-R or CD-RW disc have dirt or scratches?
  - Did a screen saver or other application operate while writing to the disc?
  - Is there enough free space on the CD-R/RW disc?
  - Does writing fail even using the simulation test?
  - Is the disc loaded in the drive with the read/write surface facing the right direction? (label up)
  - Is the drive installed in the correct orientation?
  - Was the drive or disc moved from a low temperature environment to a high temperature environment? (There is a possibility of condensation on the lens in the drive or on the surface of the disc.)

When you call for service, be prepared to give as much information as possible of your system, environment, and the specific problem. (What happened? When? How long? What was going on? Were there any error messages displayed? etc.)

Read Speed Control for CD-R Data CD

The basic default reading speed for CD-R disc media in this drive is 40X. The Read Speed Control will allow you to select the maximum read speed (52X) for CD-R media, simply by pressing the eject button. Note that this function is only available with a CD-R data disc.

To enable 52X CD-R read speed, follow the chart below:

Flow Chart

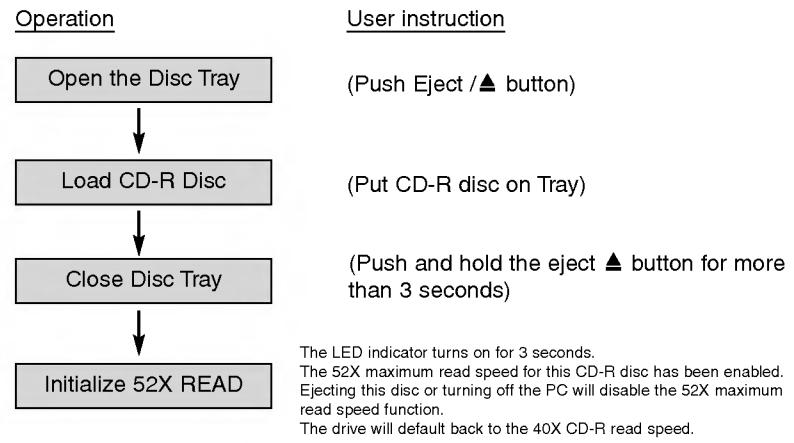

CAUTION:

The quality of CD-R data disc varies significantly from brand to brand (or brandless), as well as disc condition used over time. A disc that is poorly balanced or that may have cracks in it greatly increases the chance of disc failure or disc shatter when being read back at speeds higher than 40X, possibly causing damage to the drive.
Closely inspect discs you plan to use in the drive for any abnormalities or cracks.
If you hear strange noise or sounds from the drive during operation, this could be a sign of an unbalanced or damaged disc and it should be removed immediately.
LG Electronics does not warranty drive damage caused by faulty or shattered discs.

Specifications

Host Interface	E-IDE/ATAPI	
Disc diameters	12cm/8cm, standard size CD's	
Supported discs	**Read Function:** CD-ROM, CD-ROM XA, Audio CD, Mixed Mode (Audio and Data Combined), CD-I FMV, Video CD, Photo CD (Single and Multi-Session), CD-Plus/CD-Extra, CD-Text, CD-R, CD-RW **Write Function:** CD-ROM, CD-ROM XA, Audio CD, CD-I FMV, Video CD, CD-Plus/CD-Extra	
Mounting direction	Horizontal/Vertical	
Read/Write Speed	Write (CD-R): 8X, 16X, 24X PCAV, 32X PCAV, 40X PCAV, 48X CAV, 52X CAV (700MB) Write (CD-RW): 4X, 10X, 16X, 24X PCAV Read (CD-ROM): max 52X, (CD-R): max 40X	
Data transfer rate	*Sustained: Write: CD-RW: 600 KB/s (4X), 1500 KB/s (10X), 2400 KB/s (16X), 3600 KB/s (24X) PCAV CD-R: 1200 KB/s (8X), 2400 KB/s (16X), 3600 KB/s (24X), 4800 KB/s (32X), 6000 KB/s (40X) PCAV, 7200 KB/s (48X) CAV, 7800 KB/s (52X) CAV Read: 3000 to 7800 KB/s (20 to 52X CAV) *Burst (ATAPI): 16.67 MB/s (PIO Mode 4), 16.67 MB/s (Multi DMA Mode 2), 33.34 MB/s (Ultra DMA Mode 2)	
Average Access time(Random)	90ms (Typical)	
Buffer Capacity	2MB	
MTBF	125000 power on hours (Duty cycle 10%)	
Audio output level	Line output: 0.7 Vrms at 47 kohm	
Power	DC 5V, DC12V	
Dimensions(WxDxH)	5.75"x7.27"x1.63" (146x184.7x41.3mm)	
Weight	Less than 2lbs (0.9kg)	
Environmental Conditions	When operating	When not operating
Temperature :	5 °C to 45 °C (No air cooling)	-40 °C to 60 °C
Humidity :	10% to 80% R.H. (No condensation)	5% to 90% R.H. (No condensation)

The drive's appearance and specifications may change without prior notice.

Copyright © 2003 LG

LG Electronics U.S.A. Inc.
1000 Sylvan Ave.
Englewood Cliffs NJ 07632
U. S. A.
or http://www.lgeus.com

LG Electronics Canada Inc.
550 MATHESON Blvd. East Mississauga.
Ontario L4Z4G3 Canada

LG Electronics Deutschland GMBH
Jakob-Kaiser-Straße 12,
D-47877 Willich, Germany

LG Electronics U. K. Ltd.
LG House, 264 Bath Road,
Slough Berkshire SL1 4DT
United Kingdom

Goldstar France E.U.R.L
Paris Nord II 22, Avenue des
Nations-B.P.50372 VILLEPINTE
95945 ROISSY CDG CEDEX France

LG Electronics Italia S.P.A.
Centro Direzione "IL Quadrate" Via
Modigliani, 20090 Segrate (MI) Italy

LG Electronics España
Complejo Europa Empressaries (Edif.Bruselas)
Ctra. N-VI 28230 Las Rozas Madrid Spain

LG Electronics Australia Pty Ltd.
23, pike st Rydalmere NSW 2116
or http://www.lge.com.au

Caution!

The disc rotates at high speed in the drive unit.
Use of worn, damaged, or non-standard CD-ROM discs can only adversely affect the drive and cause the disc to shatter or crush while in use.
Disc crush can only occur when you use a damaged CD-ROM disc in the drive. It is an extremely rare occurrence, but there are steps which can be taken to prevent it.

Always check your discs before inserting them into the drive.

1. **Take care not to use worn, cracked, damaged, warped or poor quality CD-ROMs, as this may cause damage to your drive.**
2. **Check the clear plastic on the center of the disc, cracks here are the main cause of disc crush.**
3. **Do not play CD-ROMs which are a non-standard (I.e. non-circular)shape, such as heart shaped discs, or discs in the shape of a business card.**

How can you keep your discs from becoming damaged?

1. **When not in use, remove discs from the drive.**
2. **Keep discs in the packaging supplied with them and out of direct sunlight and away from heat sources.**

Excessive vibration or a sudden jolt to the drive during operation may cause a malfunction.
Avoid exposing the drive to sudden changes in temperature as it may cause condensation to collect inside the drive.

LG

Website ; http://www.lge.com
http://www.LGEservice.com

P/NO. 3828HM1041C

©2003 Made by LG