LG

http://biz.lgservice.com

SXS REFRIGERATOR

SERVICE MANUAL

CAUTION

PLEASE READ CAREFULLY THE SAFETY PRECAUTIONS OF THIS BOOK BEFORE CHECKING OR OPERATING THE REFRIGERATOR.

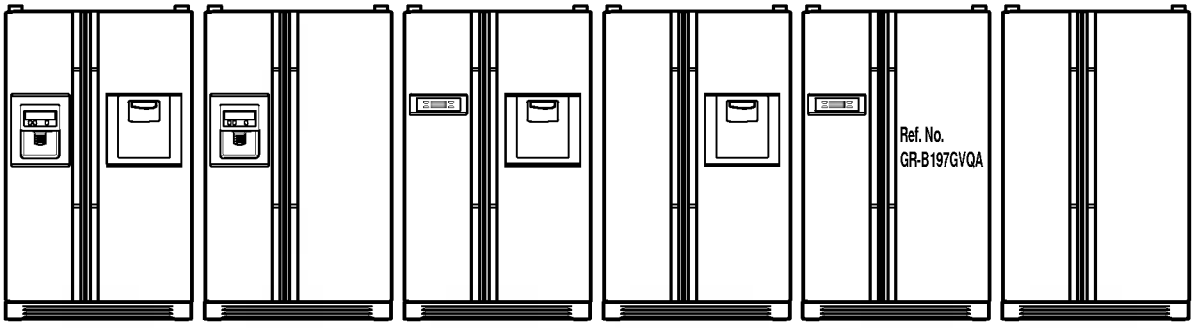

MODEL: GR-B206GVQA

COLOR: SUPER WHITE

CONTENTS

WARNINGS AND PRECAUTIONS FOR SAFETY **3**
SPECIFICATIONS **4**
PARTS IDENTIFICATION **17**
HOW TO INSTALL THE REFRIGERATOR **25**
HOW TO ADJUST DOOR HEIGHT OF THE REFRIGERATOR 25
HOW TO INSTALL WATER PIPE 26
HOW TO CONTROL THE AMOUNT OF WATER SUPPLIED TO THE ICEMAKER 30
MICOM FUNCTION **32**
EXPLATION FOR MICOM CIRCUIT **38**
EXPLANATION FOR PWB CIRCUIT 38
COMPENSATION CIRCUIT FOR WEAK-COLD, OVER-COLD AT FREEZING ROOM 53
PWB PARTS DRAWING AND LIST 54
PWB CIRCUIT DIAGRAM 60
ICE MAKER AND DISPENSER OPERATION PRINCIPLE AND REPAIR METHOD **64**
WORKING PRINCIPLES 64
FUNCTION OF ICE MAKER 65
ICE MAKER TROUBLESHOOTING 68
ICE MAKER CIRCUIT PART 69
CIRCUIT **70**
TROUBLE DIAGNOSIS **72**
TROUBLE SHOOTING 72
FAULTS 82
COOLING CYCLE HEAVY REPAIR 99
HOW TO DEAL WITH CLAIMS 106
HOW TO DISASSEMBLE AND ASSEMBLE **111**
DOOR 111
HANDLE 112
SHROUD, GRILLE FAN 112
ICEMAKER 112
DISPENSER 113
WATER TANK AND WATER LINE 115
HOME BAR 115
EXPLODED VIEW **116**
REPLACEMENT PARTS LIST **125**

WARNINGS AND PRECAUTIONS FOR SAFETY

Please observe the following safety precautions in order to use safely and correctly the refrigerator and to prevent accident and danger during repair.

1. Be care of an electric shock. Disconnect power cord from wall outlet and wait for more than three minutes before replacing PWB parts. Shut off the power whenever replacing and repairing electric components.

2. When connecting power cord, please wait for more than five minutes after power cord was disconnected from the wall outlet.

3. Please check if the power plug is pressed down by the refrigerator against the wall. If the power plug was damaged, it may cause fire or electric shock.

4. If the wall outlet is over loaded, it may cause fire. Please use its own individual electrical outlet for the refrigerator.

5. Please make sure the outlet is properly earthed, particularly in wet or damp area.

6. Use standard electrical components when replacing them.

7. Make sure the hook is correctly engaged.
   Remove dust and foreign materials from the housing and connecting parts.

8. Do not fray, damage, machine, heavily bend, pull out, or twist the power cord.

9. Please check the evidence of moisture intrusion in the electrical components. Replace the parts or mask it with insulation tapes if moisture intrusion was confirmed.

10. Do not touch the icemaker with hands or tools to confirm the operation of geared motor.

11. Do not let the customers repair, disassemble, and reconstruct the refrigerator for themselves. It may cause accident, electric shock, or fire.

12. Do not store flammable materials such as ether, benzene, alcohol, chemicals, gas, or medicine in the refrigerator.

13. Do not put flower vase, cup, cosmetics, chemicals, etc., or container with full of water on the top of the refrigerator.

14. Do not put glass bottles with full of water into the freezer. The contents shall freeze and break the glass bottles.

15. When you scrap the refrigerator, please disconnect the door gasket first and scrap it where children are not accessible.

SPECIFICATIONS

1. Ref No. : GR-P247

ITEMS	SPECIFICATIONS
DIMENSIONS (mm)	890(W)x840(D)x1750(H)
NET WEIGHT (kg)	128
COOLING SYSTEM	Fan Cooling
TEMPERATURE CONTROL	Micom Control
DEFROSTING SYSTEM	Full Automatic
	Heater Defrost
INSULATION	Cyclo-Pentane
COMPRESSOR	P.T.C. Starting Type
EVAPORATOR	Fin Tube Type
CONDENSER	Wire Condenser
REFRIGERANT	R134a (180g)
LUBRICATING OIL	FREOL @10G (310 cc)
CAPILLARY TUBE	ID 0.83
DRIER	MOLECULAR SIEVE XH-7

ITEMS	SPECIFICATIONS
FIRST DEFROST	4 - 5 Hours
DEFROST CYCLE	13 - 15 Hours
DEFROSTING DEVICE	Heater, Sheath
ANTI SWEAT HEATER	Dispenser Duct Door Heater
	Dispenser Heater
	Home Bar Heater
ANTI-FREEZING HEATER	Water Injection Heater
	Damper Heater
FREEZER LAMP	40W (1 EA)
REFRIGERATOR LAMP	40W (1 EA)
DISPENSER LAMP	15W (1 EA)

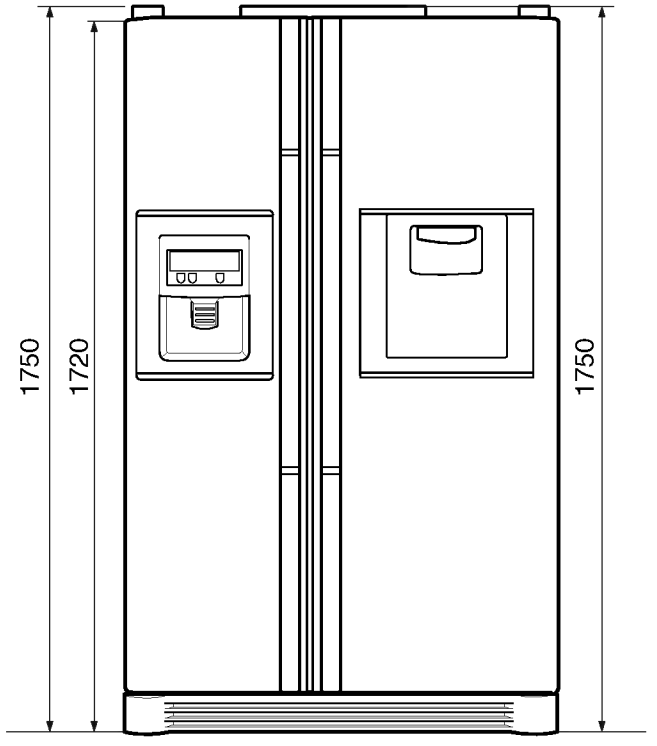

<Front View>

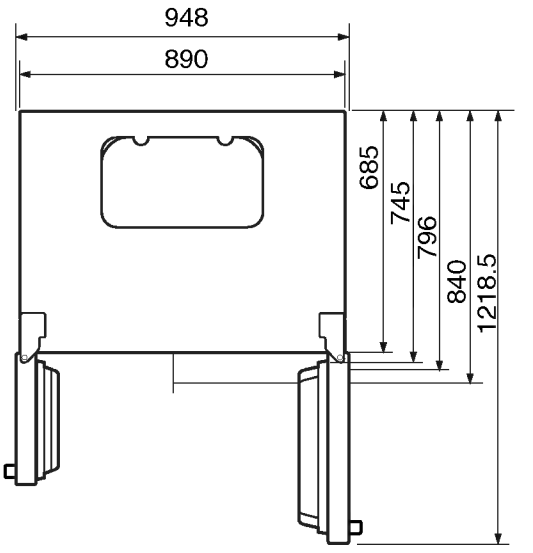

<Plane View>

SPECIFICATIONS

2. Ref No. : GR-P207

ITEMS	SPECIFICATIONS
DIMENSIONS (mm)	890(W)x755(D)x1750(H)
NET WEIGHT (kg)	123
COOLING SYSTEM	Fan Cooling
TEMPERATURE CONTROL	Micom Control
DEFROSTING SYSTEM	Full Automatic
	Heater Defrost
INSULATION	Cyclo-Pentane
COMPRESSOR	P.T.C. Starting Type
EVAPORATOR	Fin Tube Type
CONDENSER	Wire Condenser
REFRIGERANT	R134a (180g)
LUBRICATING OIL	FREOL @10G (310 cc)
CAPILLARY TUBE	ID 0.83
DRIER	MOLECULAR SIEVE XH-7

ITEMS	SPECIFICATIONS
FIRST DEFROST	4 - 5 Hours
DEFROST CYCLE	13 - 15 Hours
DEFROSTING DEVICE	Heater, Sheath
ANTI SWEAT HEATER	Dispenser Duct Door Heater
	Dispenser Heater
	Home Bar Heater
ANTI-FREEZING HEATER	Water Injection Heater
	Damper Heater
FREEZER LAMP	40W (1 EA)
REFRIGERATOR LAMP	40W (1 EA)
DISPENSER LAMP	15W (1 EA)

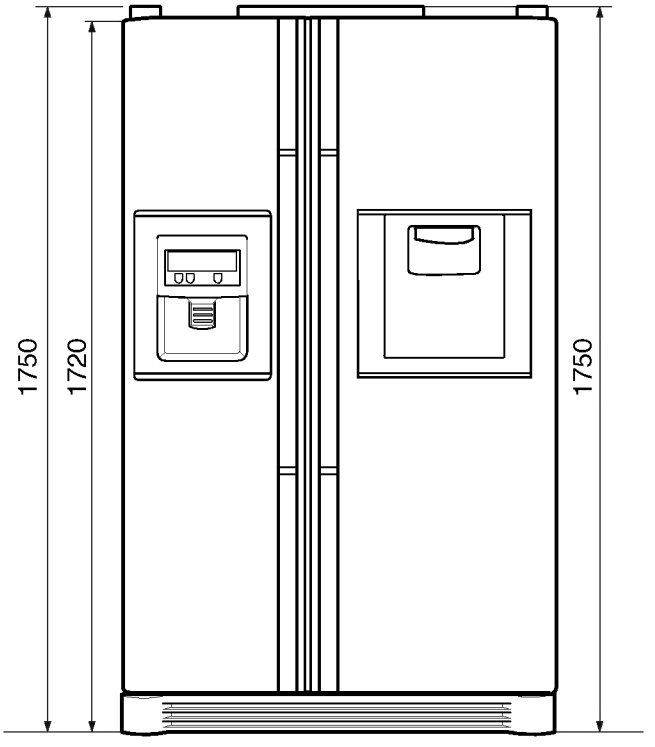

<Front View>

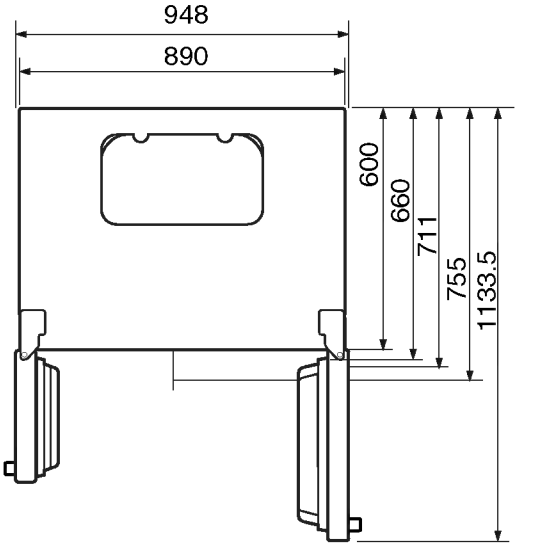

<Plane View>

SPECIFICATIONS

3. Ref No. : GR-L197

ITEMS	SPECIFICATIONS
DIMENSIONS (mm)	890(W)x725(D)x1750(H)
NET WEIGHT (kg)	113
COOLING SYSTEM	Fan Cooling
TEMPERATURE CONTROL	Micom Control
DEFROSTING SYSTEM	Full Automatic
	Heater Defrost
INSULATION	Cyclo-Pentane
COMPRESSOR	P.T.C. Starting Type
EVAPORATOR	Fin Tube Type
CONDENSER	Wire Condenser
REFRIGERANT	R134a (180g)
LUBRICATING OIL	FREOL @10G (310 cc)
CAPILLARY TUBE	ID 0.83

ITEMS	SPECIFICATIONS
DRIER	MOLECULAR SIEVE XH-7
FIRST DEFROST	4 - 5 Hours
DEFROST CYCLE	13 - 15 Hours
DEFROSTING DEVICE	Heater, Sheath
ANTI SWEAT HEATER	Dispenser Duct Door Heater
	Dispenser Heater
ANTI-FREEZING HEATER	Water Injection Heater
	Damper Heater
FREEZER LAMP	40W (1 EA)
REFRIGERATOR LAMP	40W (1 EA)
DISPENSER LAMP	15W (1 EA)

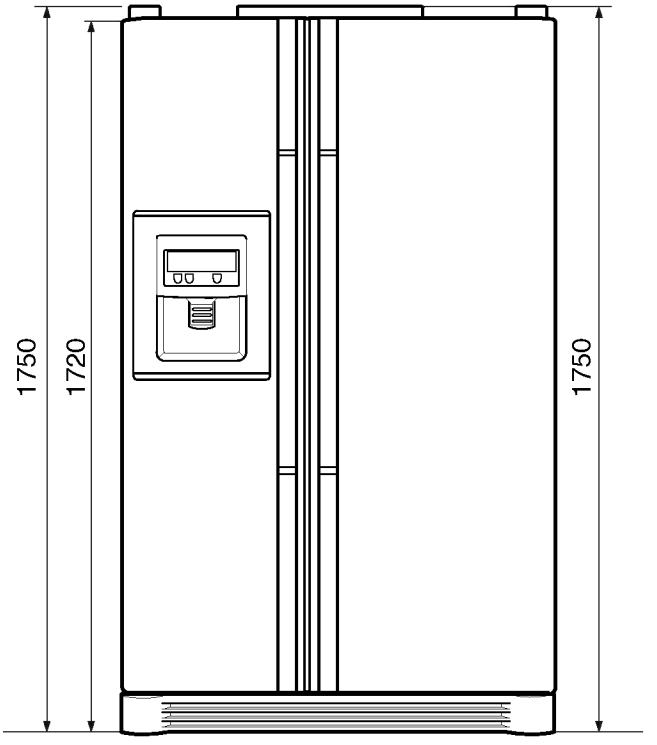

<Front View>

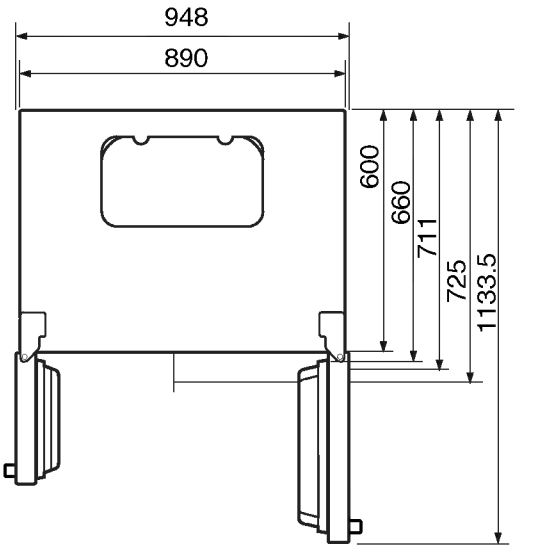

<Plane View>

SPECIFICATIONS

4. Ref No. : GR-L247

ITEMS	SPECIFICATIONS
DIMENSIONS (mm)	890(W)x840(D)x1750(H)
NET WEIGHT (kg)	125
COOLING SYSTEM	Fan Cooling
TEMPERATURE CONTROL	Micom Control
DEFROSTING SYSTEM	Full Automatic
	Heater Defrost
INSULATION	Cyclo-Pentane
COMPRESSOR	P.T.C. Starting Type
EVAPORATOR	Fin Tube Type
CONDENSER	Wire Condenser
REFRIGERANT	R134a (180g)
LUBRICATING OIL	FREOL @10G (310 cc)
CAPILLARY TUBE	ID 0.83

ITEMS	SPECIFICATIONS
DRIER	MOLECULAR SIEVE XH-7
FIRST DEFROST	4 - 5 Hours
DEFROST CYCLE	13 - 15 Hours
DEFROSTING DEVICE	Heater, Sheath
ANTI SWEAT HEATER	Dispenser Duct Door Heater
	Dispenser Heater
ANTI-FREEZING HEATER	Water Injection Heater
	Damper Heater
FREEZER LAMP	40W (1 EA)
REFRIGERATOR LAMP	40W (1 EA)
DISPENSER LAMP	15W (1 EA)

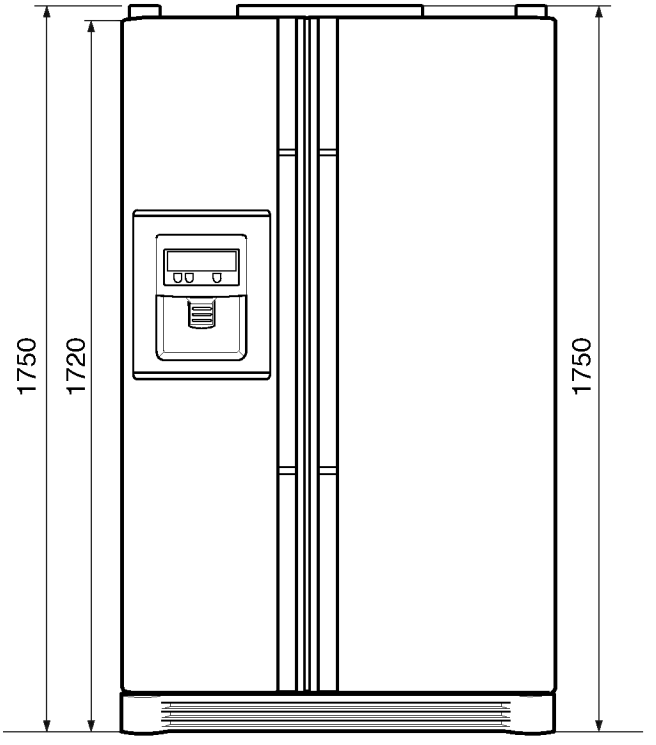

<Front View>

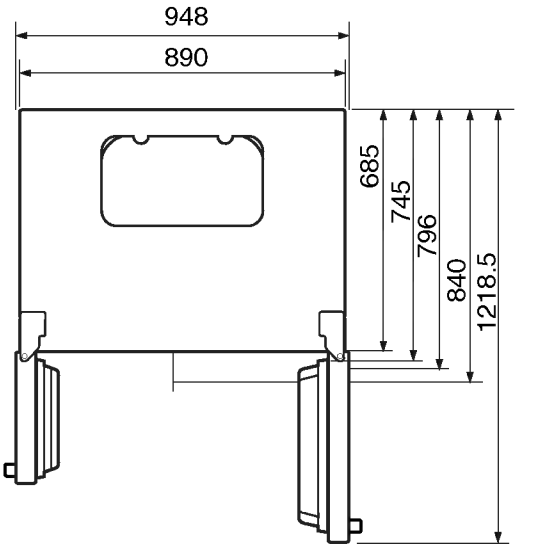

<Plane View>

SPECIFICATIONS

5. Ref No. : GR-L207

ITEMS	SPECIFICATIONS
DIMENSIONS (mm)	890(W)x755(D)x1750(H)
NET WEIGHT (kg)	120
COOLING SYSTEM	Fan Cooling
TEMPERATURE CONTROL	Micom Control
DEFROSTING SYSTEM	Full Automatic
	Heater Defrost
INSULATION	Cyclo-Pentane
COMPRESSOR	P.T.C. Starting Type
EVAPORATOR	Fin Tube Type
CONDENSER	Wire Condenser
REFRIGERANT	R134a (180g)
LUBRICATING OIL	FREOL @10G (310 cc)
CAPILLARY TUBE	ID 0.83

ITEMS	SPECIFICATIONS
DRIER	MOLECULAR SIEVE XH-7
FIRST DEFROST	4 - 5 Hours
DEFROST CYCLE	13 - 15 Hours
DEFROSTING DEVICE	Heater, Sheath
ANTI SWEAT HEATER	Dispenser Duct Door Heater
	Dispenser Heater
ANTI-FREEZING HEATER	Water Injection Heater
	Damper Heater
FREEZER LAMP	40W (1 EA)
REFRIGERATOR LAMP	40W (1 EA)
DISPENSER LAMP	15W (1 EA)

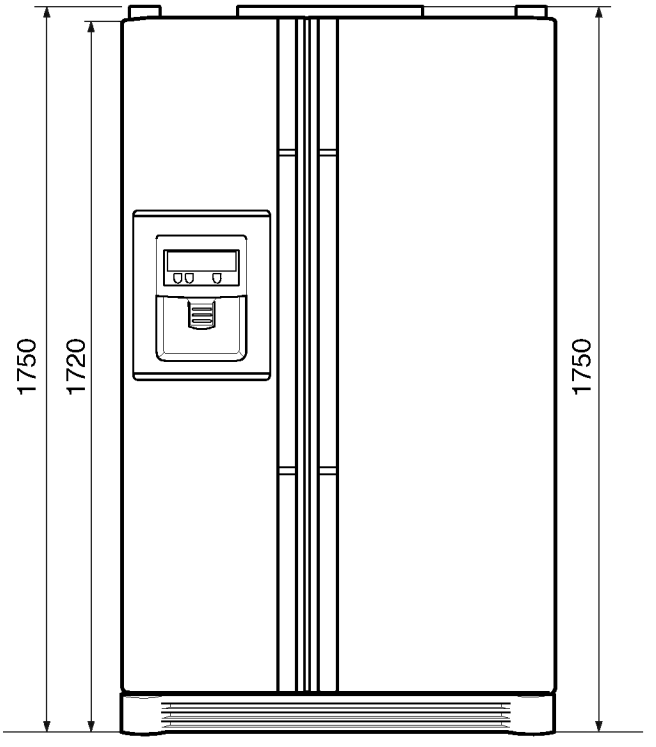

<Front View>

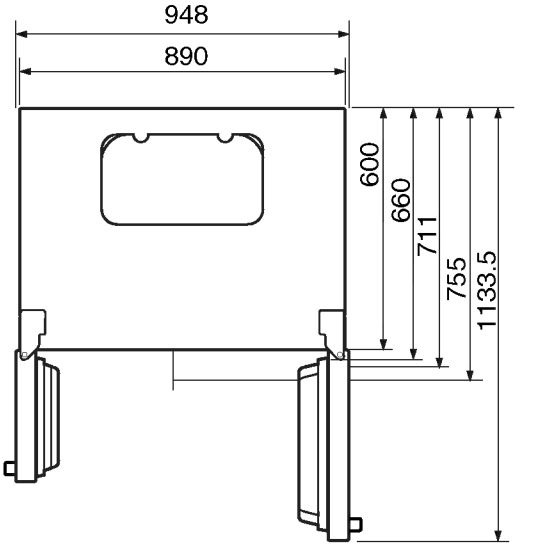

<Plane View>

SPECIFICATIONS

1. Ref No. : GR-C247

ITEMS	SPECIFICATIONS	ITEMS	SPECIFICATIONS
DIMENSIONS (mm)	890(W)x840(D)x1750(H)	LUBRICATING OIL	FREOL @10G (310 cc)
NET WEIGHT (kg)	117	CAPILLARY TUBE	ID 0.83
COOLING SYSTEM	Fan Cooling	DRIER	MOLECULAR SIEVE XH-7
TEMPERATURE CONTROL	Micom Control	FIRST DEFROST	4 - 5 Hours
DEFROSTING SYSTEM	Full Automatic	DEFROST CYCLE	13 - 15 Hours
	Heater Defrost	DEFROSTING DEVICE	Heater, Sheath
INSULATION	Cyclo-Pentane	ANTI SWEAT HEATER	Home Bar Heater
COMPRESSOR	P.T.C. Starting Type	ANTI-FREEZING HEATER	Damper Heater
EVAPORATOR	Fin Tube Type	FREEZER LAMP	40W (1 EA)
CONDENSER	Wire Condenser	REFRIGERATOR LAMP	40W (1 EA)
REFRIGERANT	R134a (180g)	DISPENSER LAMP	15W (1 EA)

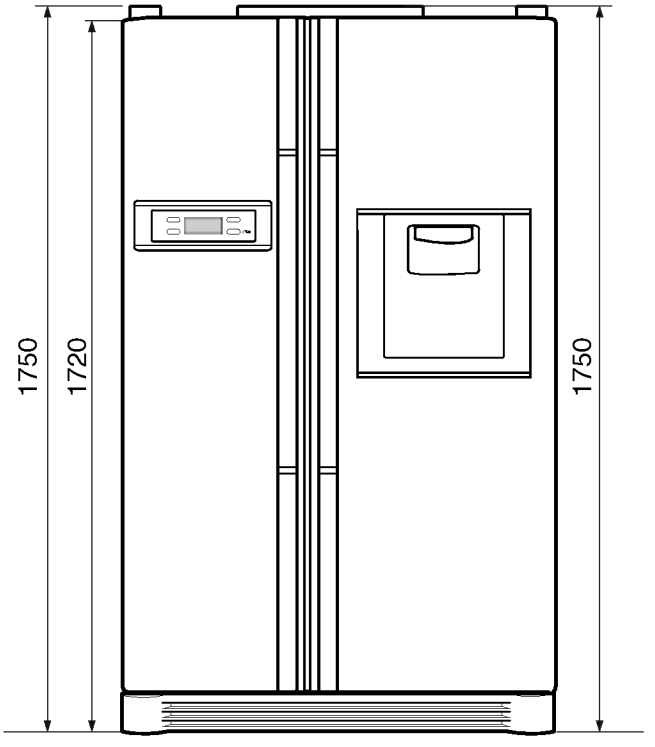

<Front View>

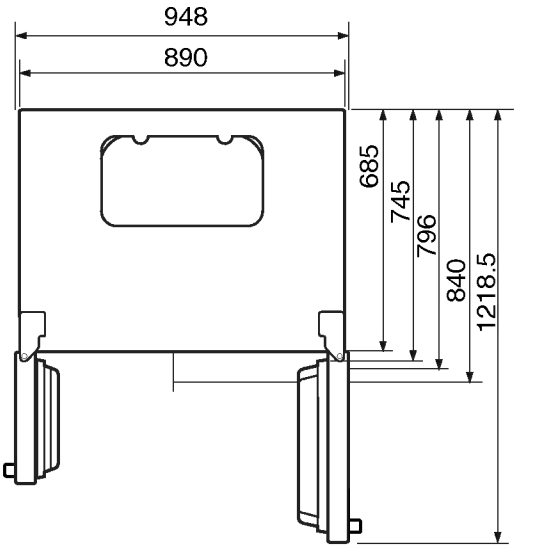

<Plane View>

SPECIFICATIONS

2. Ref No. : GR-C207

ITEMS	SPECIFICATIONS
DIMENSIONS (mm)	890(W)x755(D)x1750(H)
NET WEIGHT (kg)	112
COOLING SYSTEM	Fan Cooling
TEMPERATURE CONTROL	Micom Control
DEFROSTING SYSTEM	Full Automatic
	Heater Defrost
INSULATION	Cyclo-Pentane
COMPRESSOR	P.T.C. Starting Type
EVAPORATOR	Fin Tube Type
CONDENSER	Wire Condenser
REFRIGERANT	R134a (180g)

ITEMS	SPECIFICATIONS
LUBRICATING OIL	FREOL @10G (310 cc)
CAPILLARY TUBE	ID 0.83
DRIER	MOLECULAR SIEVE XH-7
FIRST DEFROST	4 - 5 Hours
DEFROST CYCLE	13 - 15 Hours
DEFROSTING DEVICE	Heater, Sheath
ANTI SWEAT HEATER	Home Bar Heater
ANTI-FREEZING HEATER	Damper Heater
FREEZER LAMP	40W (1 EA)
REFRIGERATOR LAMP	40W (1 EA)
DISPENSER LAMP	15W (1 EA)

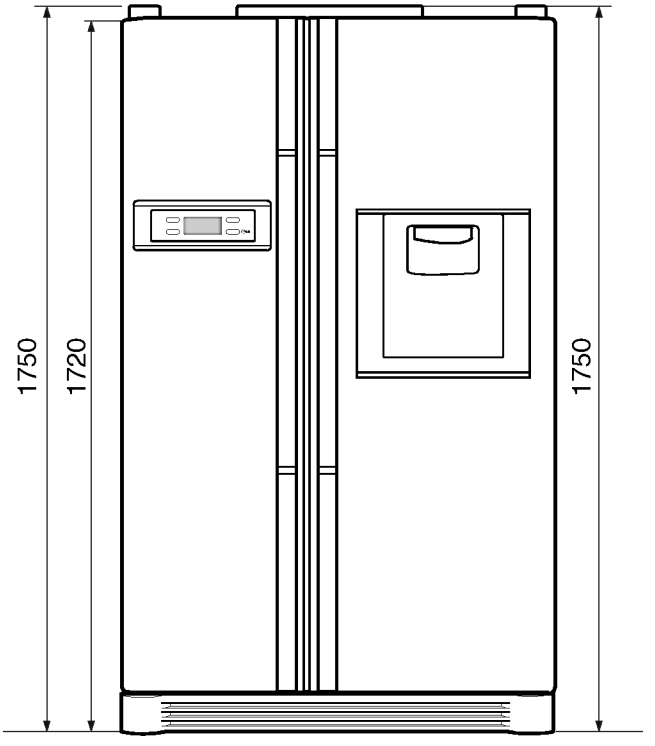

<Front View>

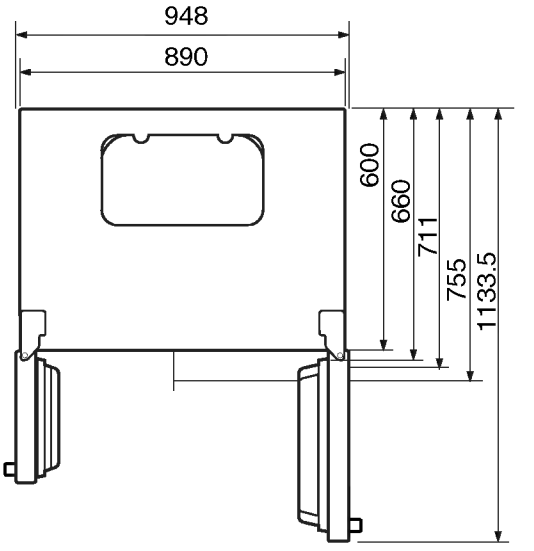

<Plane View>

SPECIFICATIONS

3. Ref No. : GR-B247

ITEMS	SPECIFICATIONS
DIMENSIONS (mm)	890(W)x840(D)x1750(H)
NET WEIGHT (kg)	114
COOLING SYSTEM	Fan Cooling
TEMPERATURE CONTROL	Micom Control
DEFROSTING SYSTEM	Full Automatic
	Heater Defrost
INSULATION	Cyclo-Pentane
COMPRESSOR	P.T.C. Starting Type
EVAPORATOR	Fin Tube Type
CONDENSER	Wire Condenser
REFRIGERANT	R134a (180g)

ITEMS	SPECIFICATIONS
LUBRICATING OIL	FREOL @10G (310 cc)
CAPILLARY TUBE	ID 0.83
DRIER	MOLECULAR SIEVE XH-7
FIRST DEFROST	4 - 5 Hours
DEFROST CYCLE	13 - 15 Hours
DEFROSTING DEVICE	Heater, Sheath
ANTI-FREEZING HEATER	Damper Heater
FREEZER LAMP	40W (1 EA)
REFRIGERATOR LAMP	40W (1 EA)
DISPENSER LAMP	15W (1 EA)

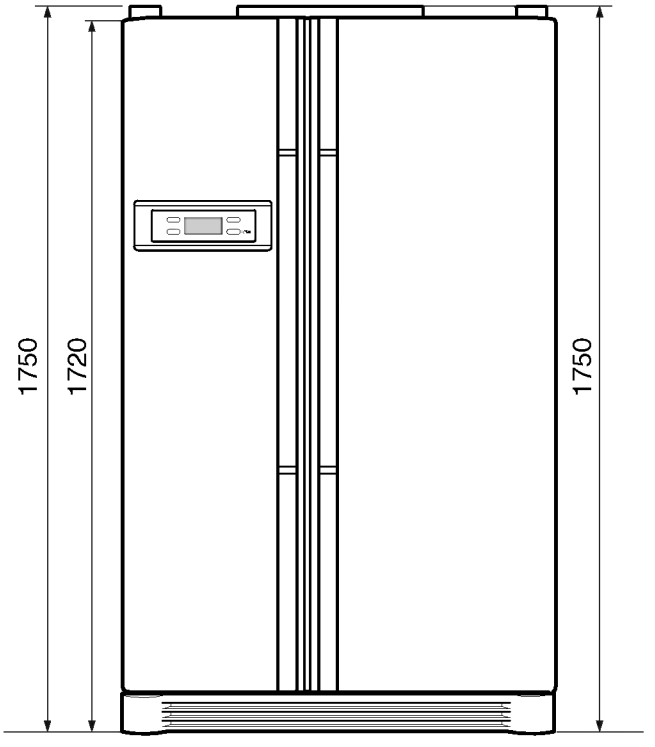

<Front View>

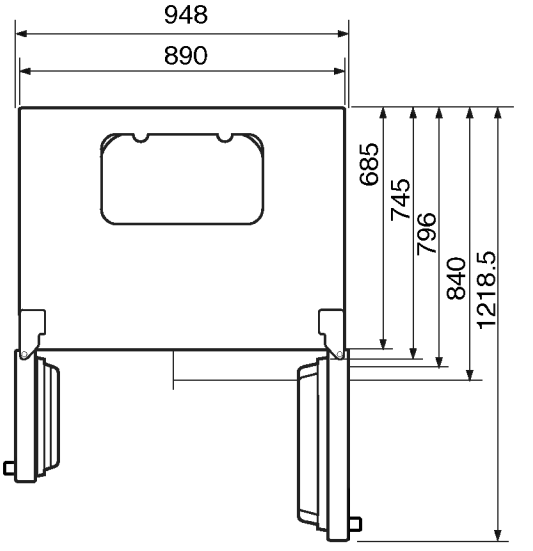

<Plane View>

SPECIFICATIONS

4. Ref No. : GR-B207 / GR-B197

ITEMS	SPECIFICATIONS	
DIMENSIONS (mm)	890(W)x755(D)x1750(H)	
	890(W)x725(D)x1750(H)	
NET WEIGHT (kg)	109	106
COOLING SYSTEM	Fan Cooling	
TEMPERATURE CONTROL	Micom Control	
DEFROSTING SYSTEM	Full Automatic	
	Heater Defrost	
INSULATION	Cyclo-Pentane	
COMPRESSOR	P.T.C. Starting Type	
EVAPORATOR	Fin Tube Type	
CONDENSER	Wire Condenser	
REFRIGERANT	R134a (180g)	

ITEMS	SPECIFICATIONS
LUBRICATING OIL	FREOL @10G (310 cc)
CAPILLARY TUBE	ID 0.83
DRIER	MOLECULAR SIEVE XH-7
FIRST DEFROST	4 - 5 Hours
DEFROST CYCLE	13 - 15 Hours
DEFROSTING DEVICE	Heater, Sheath
ANTI-FREEZING HEATER	Damper Heater
FREEZER LAMP	40W (1 EA)
REFRIGERATOR LAMP	40W (1 EA)
DISPENSER LAMP	15W (1 EA)

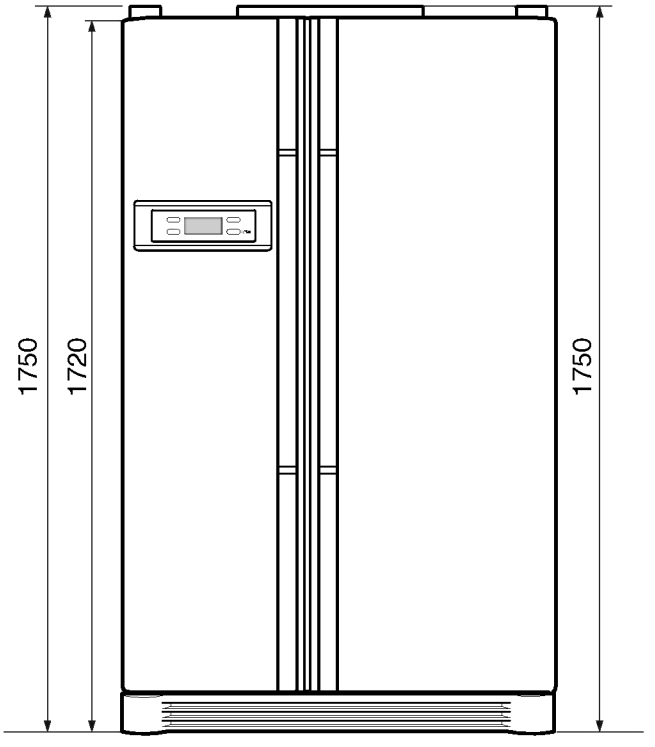

<Front View>

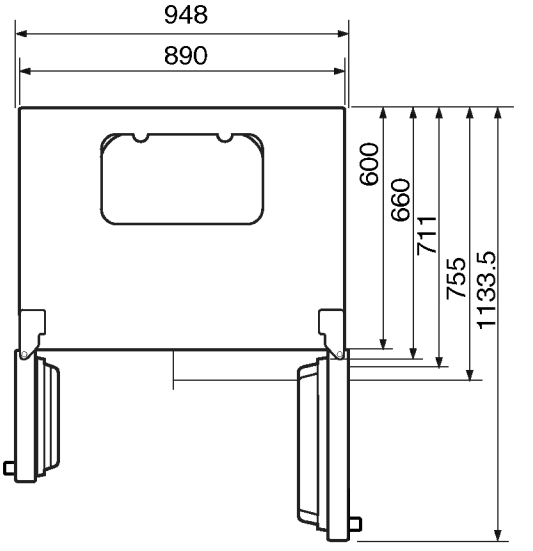

<Plane View>

SPECIFICATIONS

1. Ref No. : GR-C247

ITEMS	SPECIFICATIONS	ITEMS	SPECIFICATIONS
DIMENSIONS (mm)	890(W)x840(D)x1750(H)	LUBRICATING OIL	FREOL @10G (310 cc)
NET WEIGHT (kg)	117	CAPILLARY TUBE	ID 0.83
COOLING SYSTEM	Fan Cooling	DRIER	MOLECULAR SIEVE XH-7
TEMPERATURE CONTROL	Micom Control	FIRST DEFROST	4 - 5 Hours
DEFROSTING SYSTEM	Full Automatic	DEFROST CYCLE	13 - 15 Hours
	Heater Defrost	DEFROSTING DEVICE	Heater, Sheath
INSULATION	Cyclo-Pentane	ANTI SWEAT HEATER	Home Bar Heater
COMPRESSOR	P.T.C. Starting Type	ANTI-FREEZING HEATER	Damper Heater
EVAPORATOR	Fin Tube Type	FREEZER LAMP	40W (1 EA)
CONDENSER	Wire Condenser	REFRIGERATOR LAMP	40W (1 EA)
REFRIGERANT	R134a (180g)	DISPENSER LAMP	15W (1 EA)

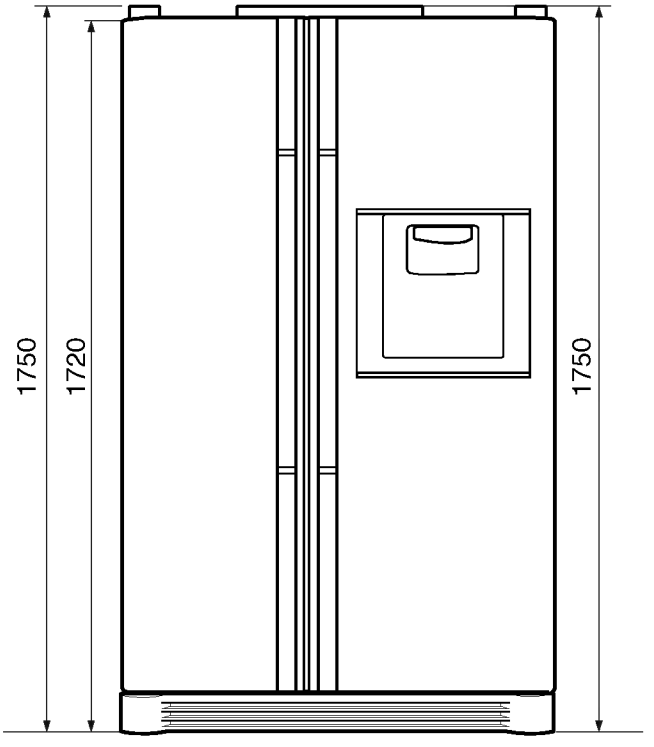

<Front View>

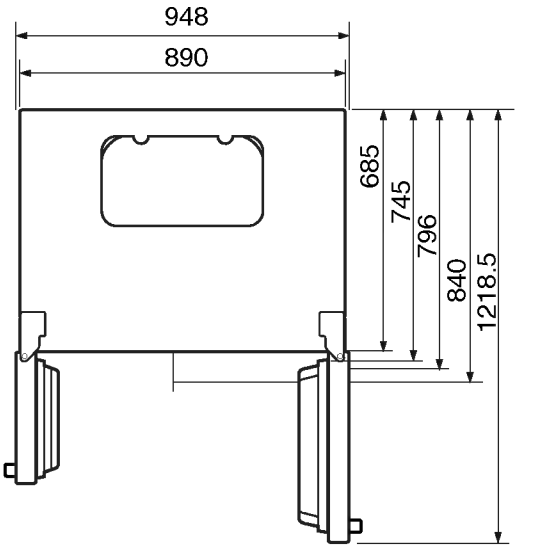

<Plane View>

SPECIFICATIONS

2. Ref No. : GR-C207

ITEMS	SPECIFICATIONS
DIMENSIONS (mm)	890(W)x755(D)x1750(H)
NET WEIGHT (kg)	112
COOLING SYSTEM	Fan Cooling
TEMPERATURE CONTROL	Micom Control
DEFROSTING SYSTEM	Full Automatic
	Heater Defrost
INSULATION	Cyclo-Pentane
COMPRESSOR	P.T.C. Starting Type
EVAPORATOR	Fin Tube Type
CONDENSER	Wire Condenser
REFRIGERANT	R134a (180g)

ITEMS	SPECIFICATIONS
LUBRICATING OIL	FREOL @10G (310 cc)
CAPILLARY TUBE	ID 0.83
DRIER	MOLECULAR SIEVE XH-7
FIRST DEFROST	4 - 5 Hours
DEFROST CYCLE	13 - 15 Hours
DEFROSTING DEVICE	Heater, Sheath
ANTI SWEAT HEATER	Home Bar Heater
ANTI-FREEZING HEATER	Damper Heater
FREEZER LAMP	40W (1 EA)
REFRIGERATOR LAMP	40W (1 EA)
DISPENSER LAMP	15W (1 EA)

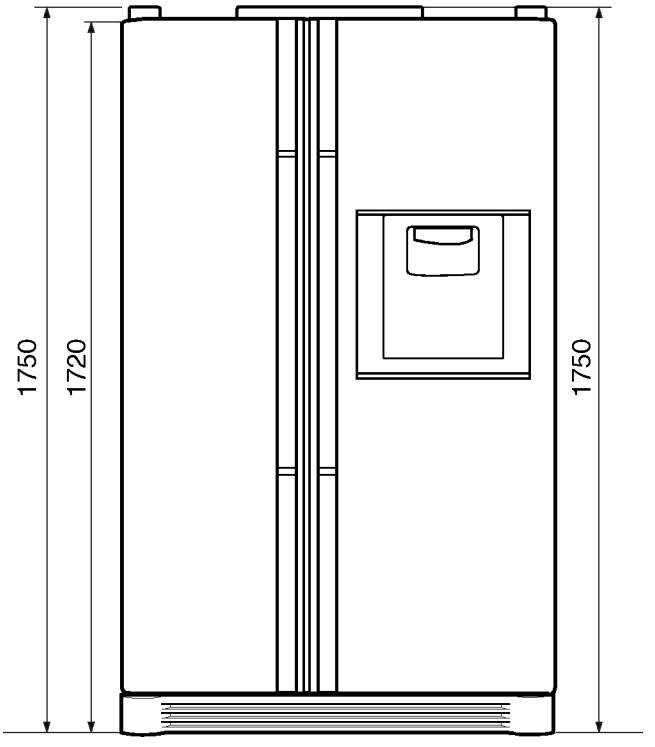

<Front View>

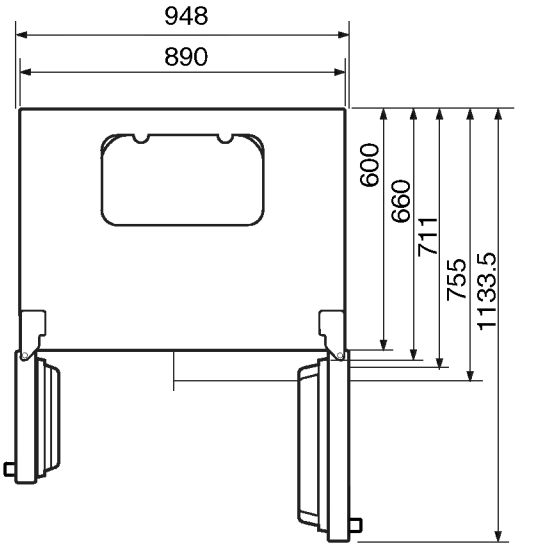

<Plane View>

SPECIFICATIONS

3. Ref No. : GR-B247

ITEMS	SPECIFICATIONS
DIMENSIONS (mm)	890(W)x840(D)x1750(H)
NET WEIGHT (kg)	114
COOLING SYSTEM	Fan Cooling
TEMPERATURE CONTROL	Micom Control
DEFROSTING SYSTEM	Full Automatic
	Heater Defrost
INSULATION	Cyclo-Pentane
COMPRESSOR	P.T.C. Starting Type
EVAPORATOR	Fin Tube Type
CONDENSER	Wire Condenser
REFRIGERANT	R134a (180g)

ITEMS	SPECIFICATIONS
LUBRICATING OIL	FREOL @10G (310 cc)
CAPILLARY TUBE	ID 0.83
DRIER	MOLECULAR SIEVE XH-7
FIRST DEFROST	4 - 5 Hours
DEFROST CYCLE	13 - 15 Hours
DEFROSTING DEVICE	Heater, Sheath
ANTI-FREEZING HEATER	Damper Heater
FREEZER LAMP	40W (1 EA)
REFRIGERATOR LAMP	40W (1 EA)
DISPENSER LAMP	15W (1 EA)

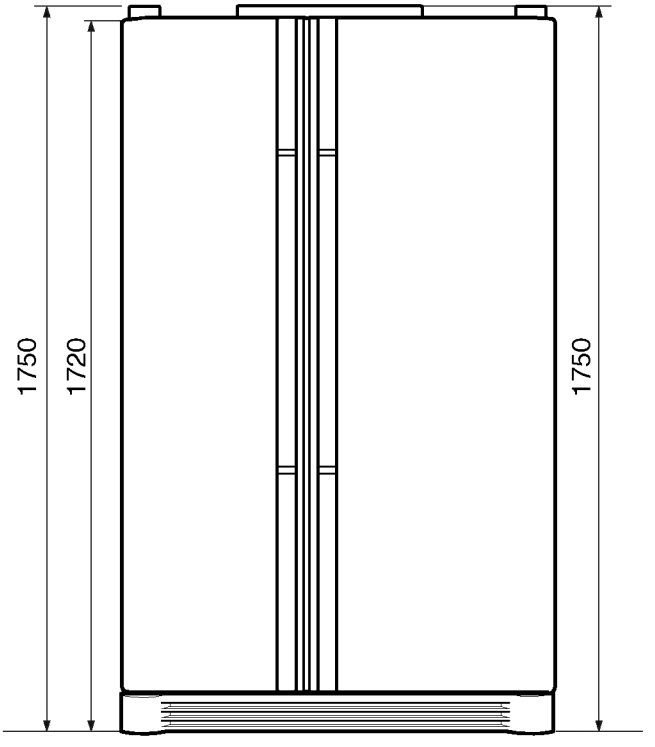

<Front View>

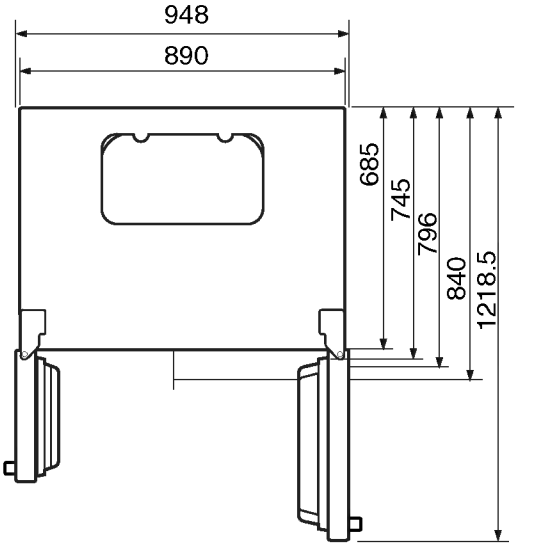

<Plane View>

SPECIFICATIONS

4. Ref No. : GR-B207 / GR-B197

ITEMS		SPECIFICATIONS
DIMENSIONS (mm)	B207	890(W)x755(D)x1750(H)
	B197	890(W)x725(D)x1750(H)
NET WEIGHT (kg)		109
COOLING SYSTEM		Fan Cooling
TEMPERATURE CONTROL		Micom Control
DEFROSTING SYSTEM		Full Automatic
		Heater Defrost
INSULATION		Cyclo-Pentane
COMPRESSOR		P.T.C. Starting Type
EVAPORATOR		Fin Tube Type
CONDENSER		Wire Condenser

ITEMS	SPECIFICATIONS
REFRIGERANT	R134a (180g)
LUBRICATING OIL	FREOL @10G (310 cc)
CAPILLARY TUBE	ID 0.83
DRIER	MOLECULAR SIEVE XH-7
FIRST DEFROST	4 - 5 Hours
DEFROST CYCLE	13 - 15 Hours
DEFROSTING DEVICE	Heater, Sheath
ANTI-FREEZING HEATER	Damper Heater
FREEZER LAMP	40W (1 EA)
REFRIGERATOR LAMP	40W (1 EA)
DISPENSER LAMP	15W (1 EA)

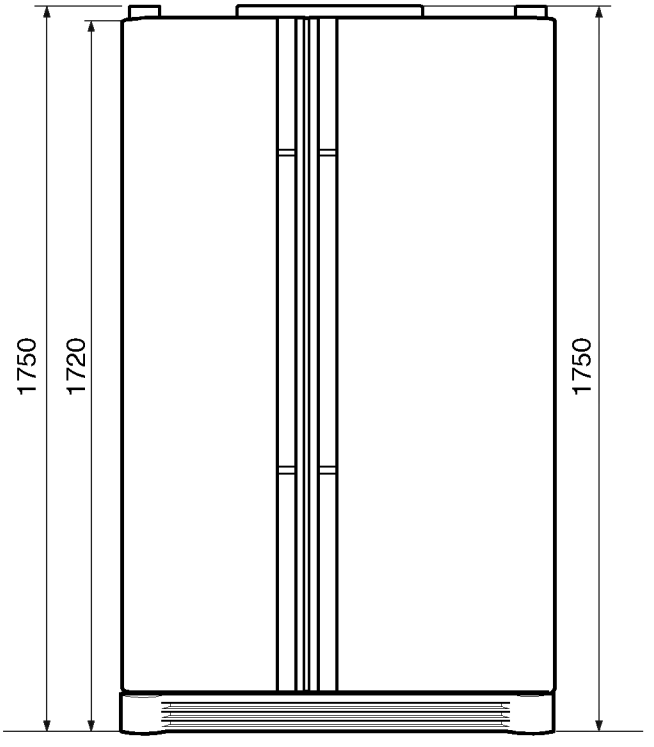

<Front View>

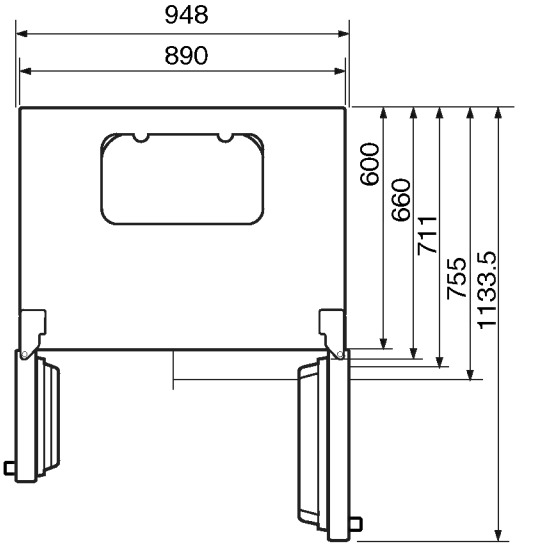

<Plane View>

PARTS IDENTIFICATION

1. Ref No. : GR-P247, GR-P207 (Internal Filter)

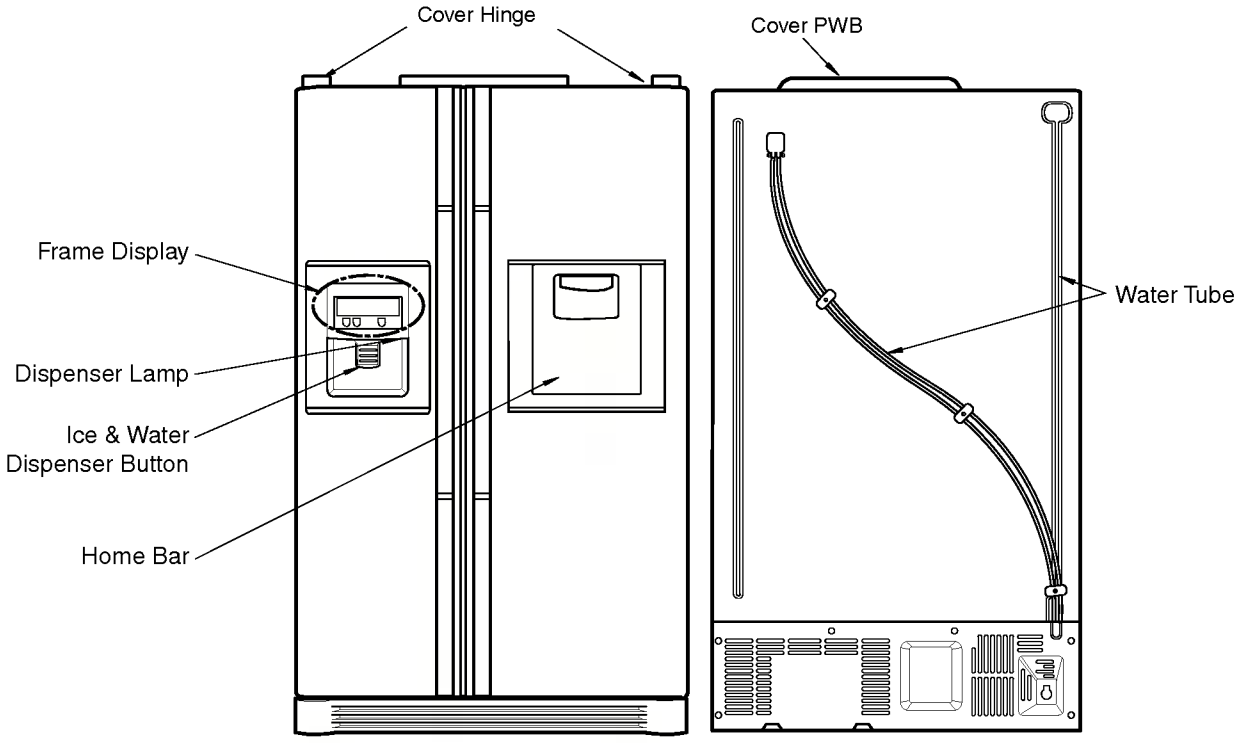

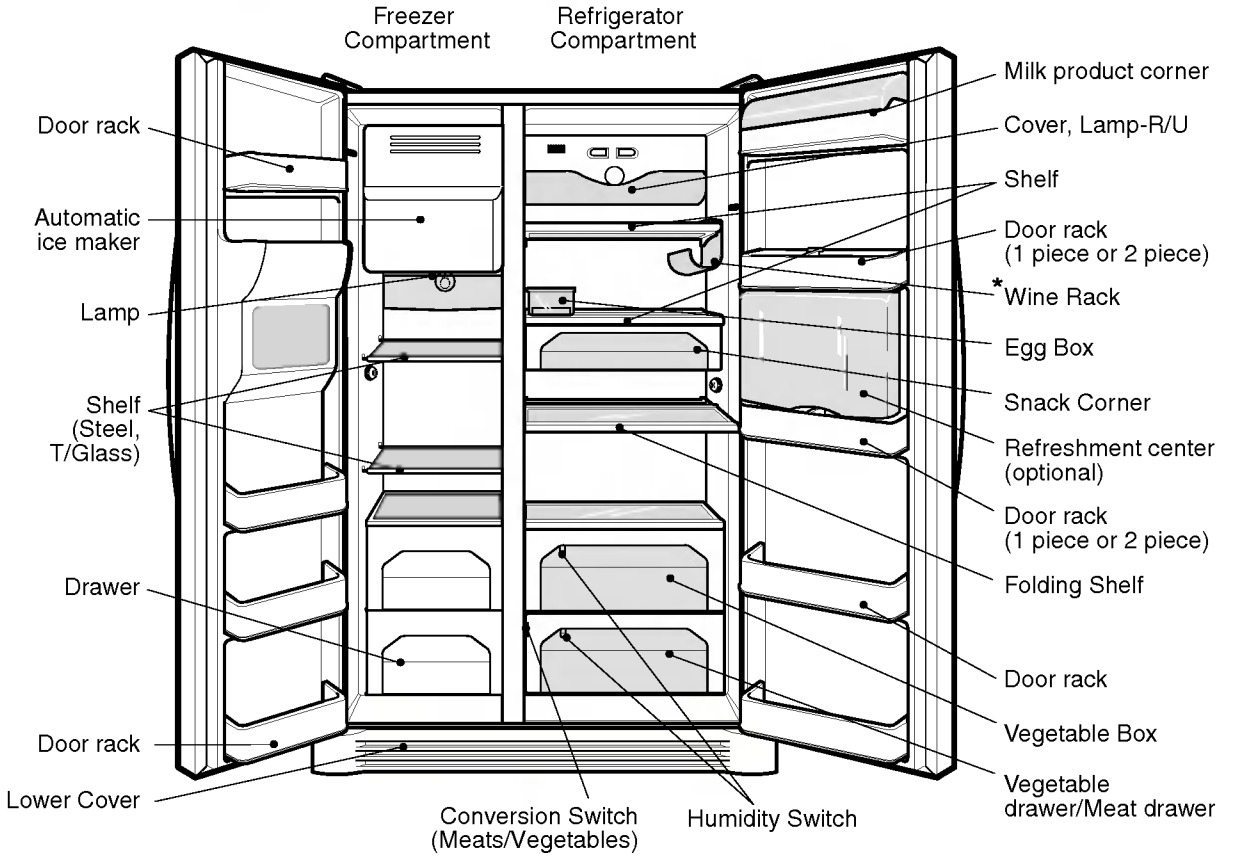

PARTS IDENTIFICATION

2. Ref No. : GR-P247, GR-P207 (External Filter)

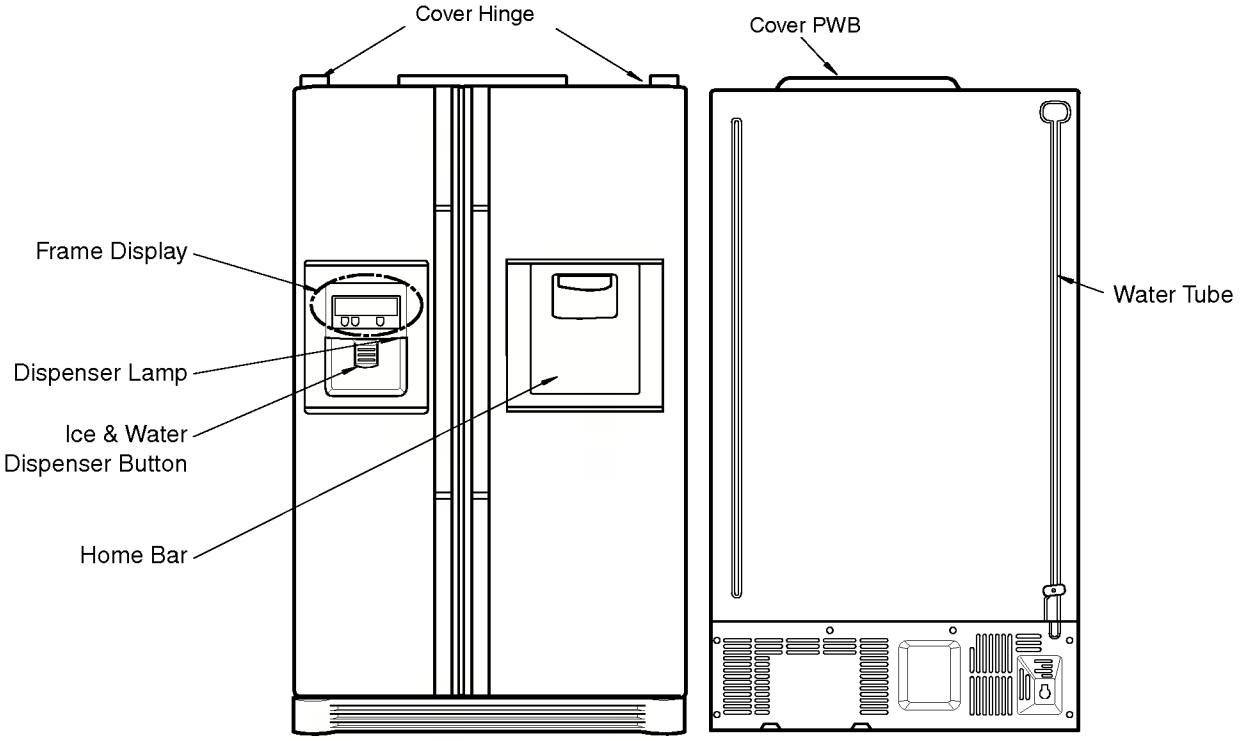

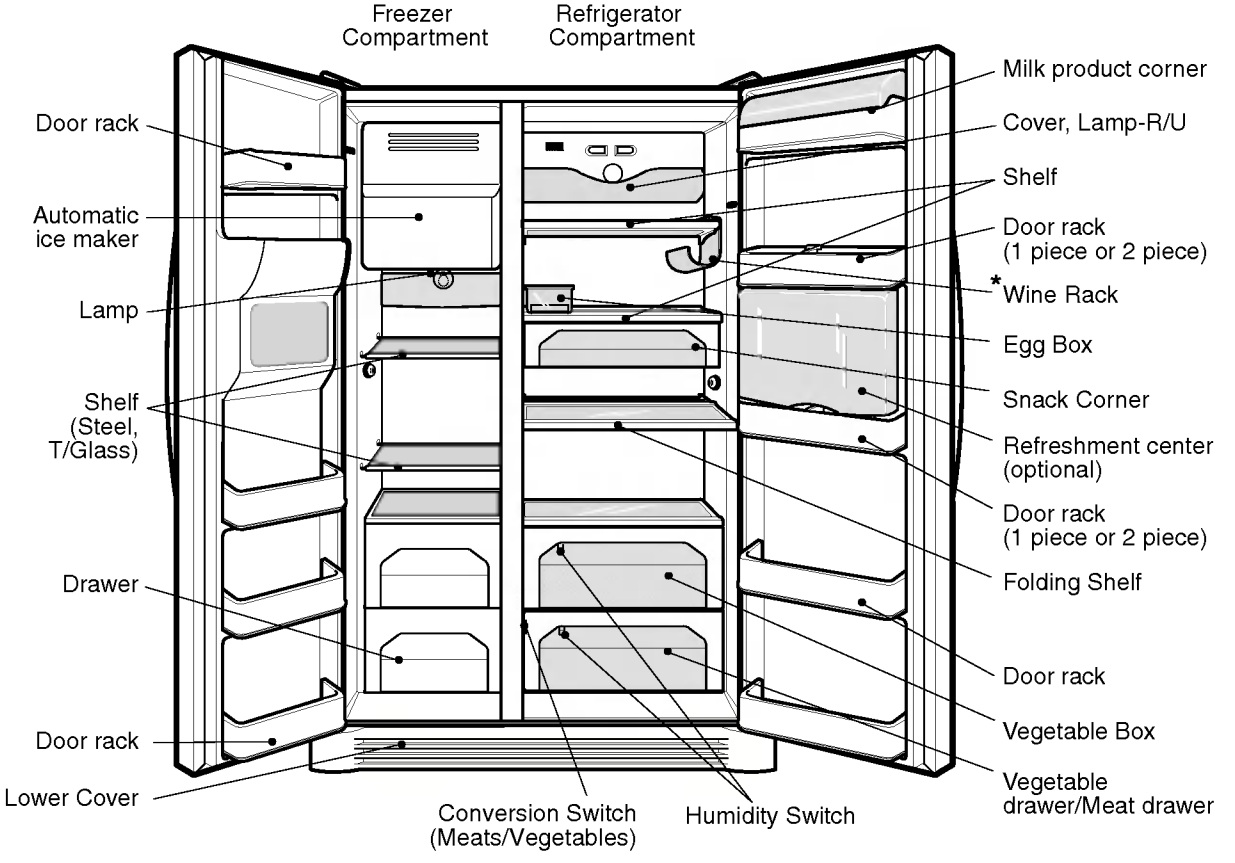

PARTS IDENTIFICATION

3. Ref No. : GR-L247, GR-L207, GR-L197 (Internal Filter)

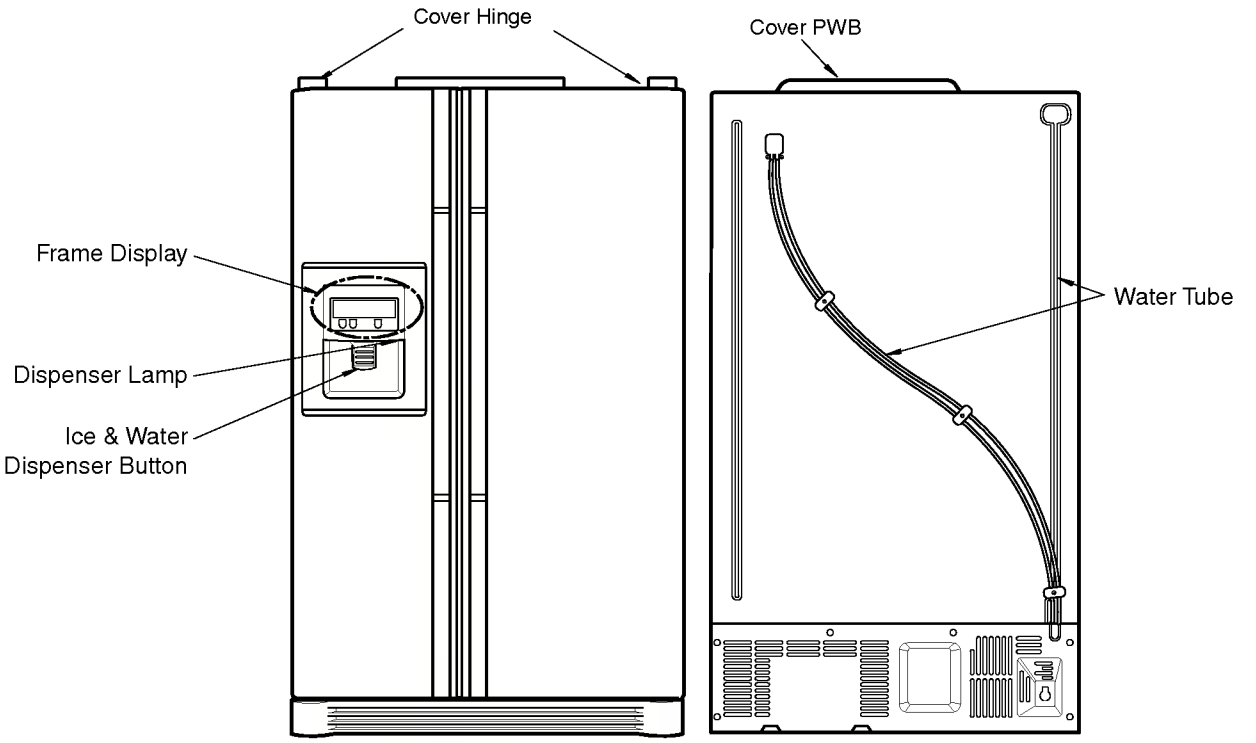

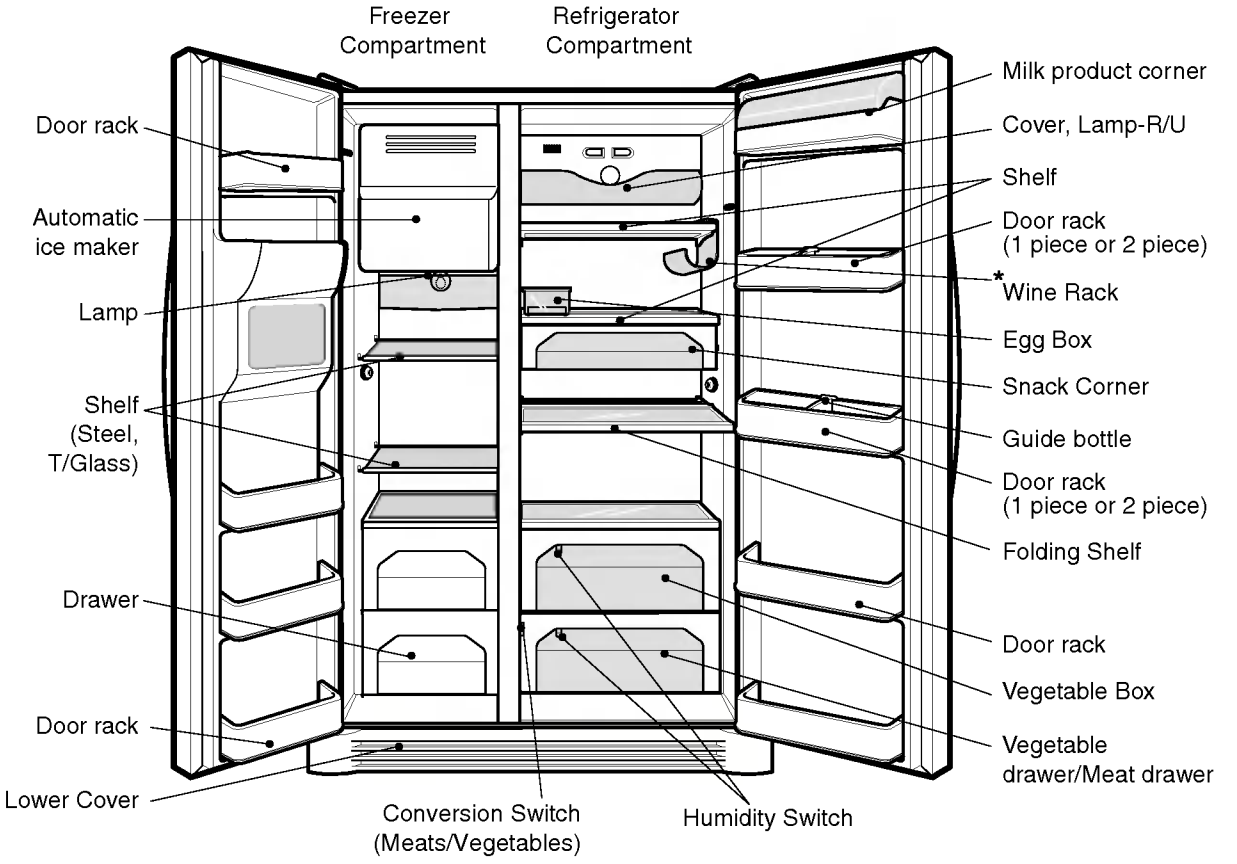

PARTS IDENTIFICATION

4. Ref No. : GR-L247, GR-L207 (External Filter)

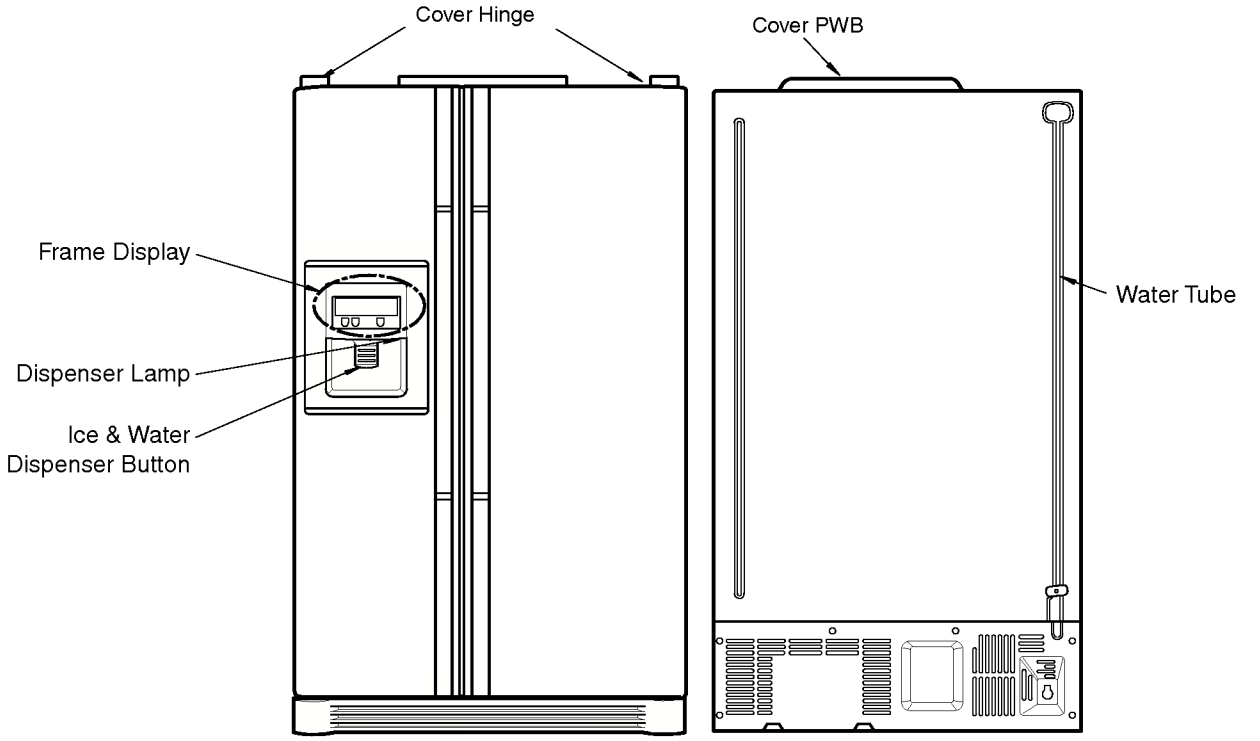

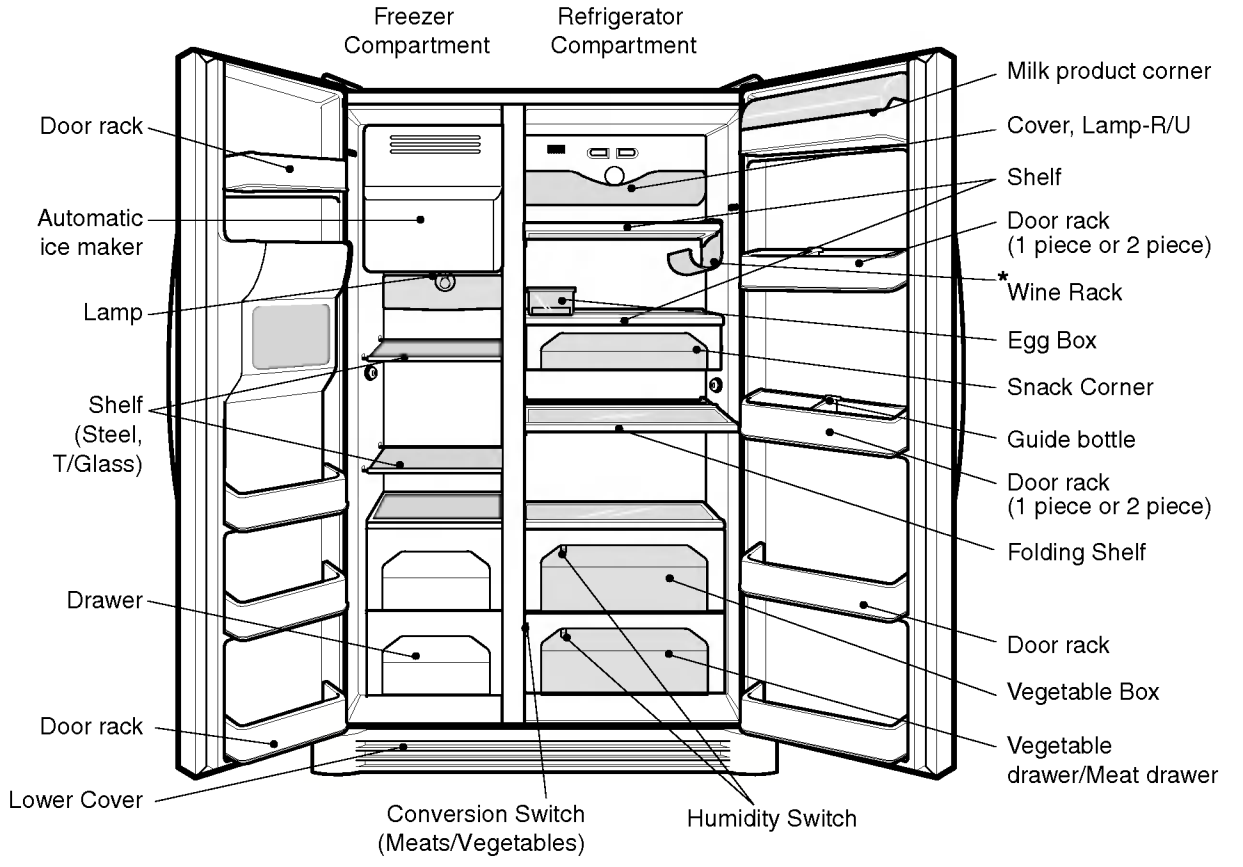

PARTS IDENTIFICATION

1. Ref No. : GR-C247, GR-C207

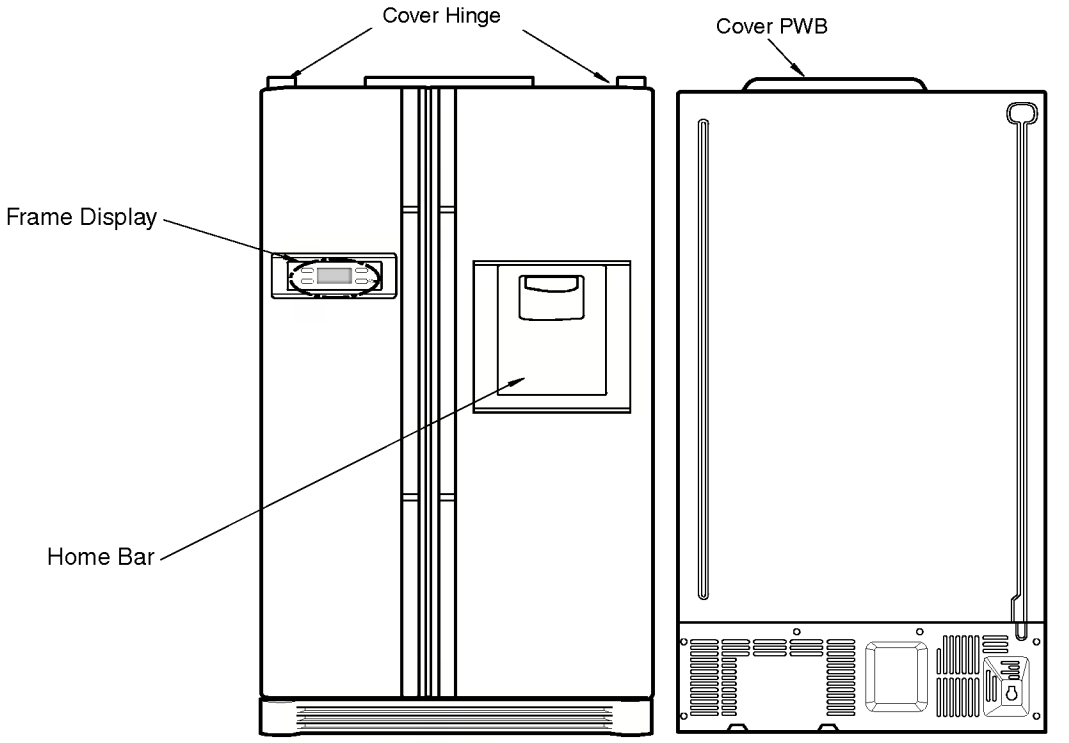

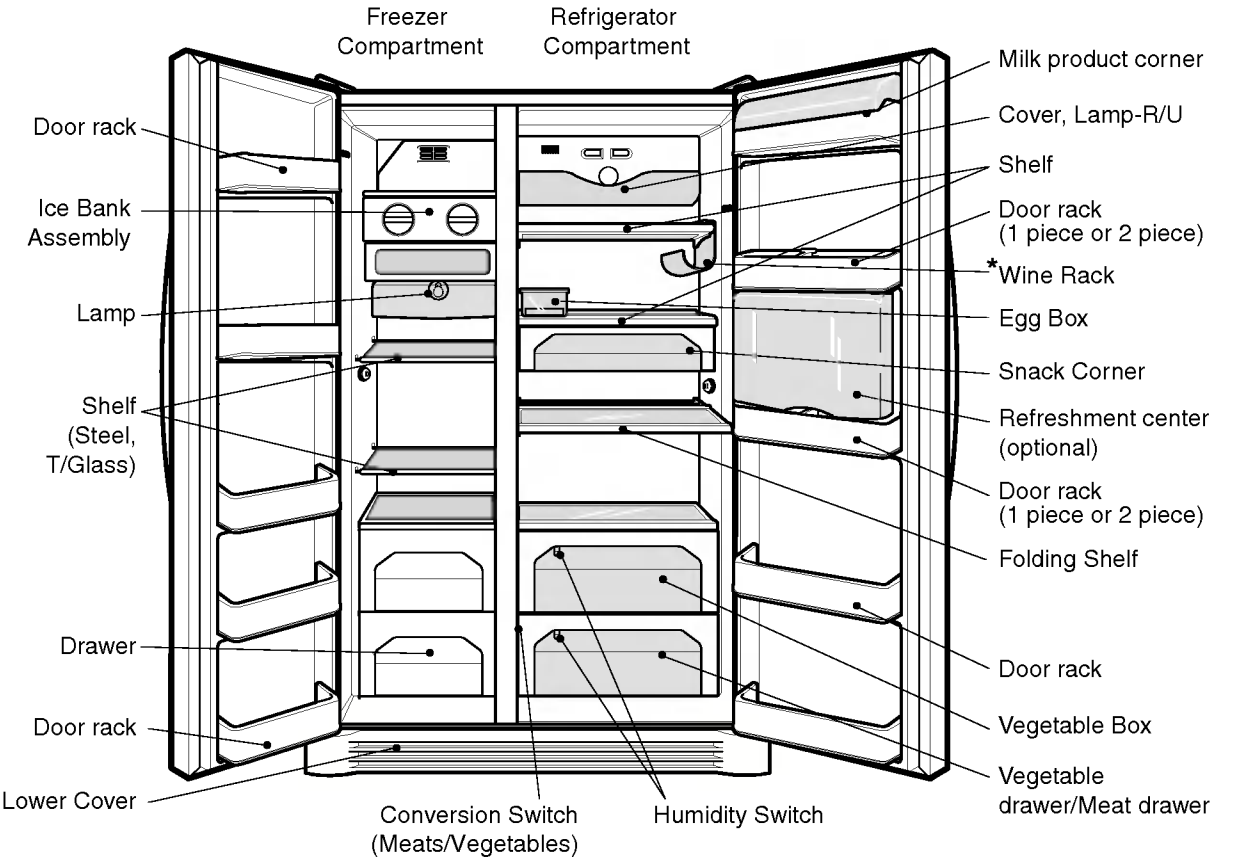

PARTS IDENTIFICATION

2. Ref No. : GR-B247, GR-B207,GR-B197

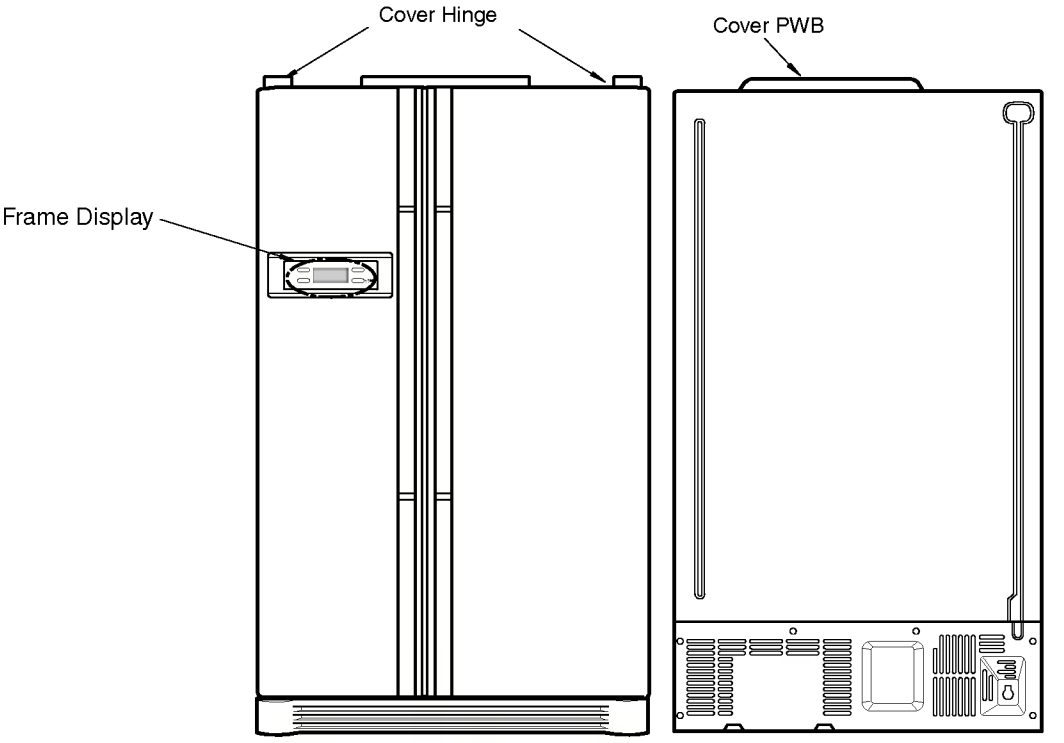

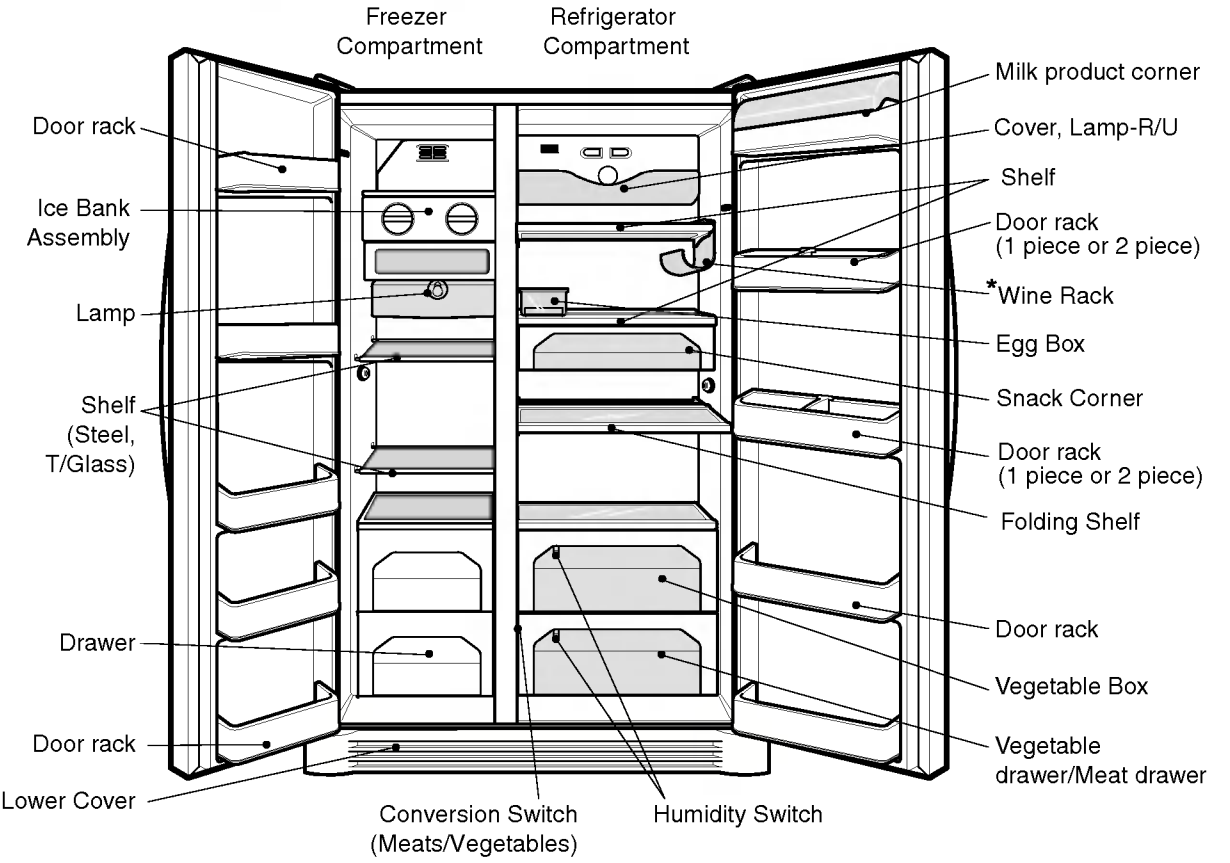

PARTS IDENTIFICATION

3. Ref No. : GR-C247, GR-C207

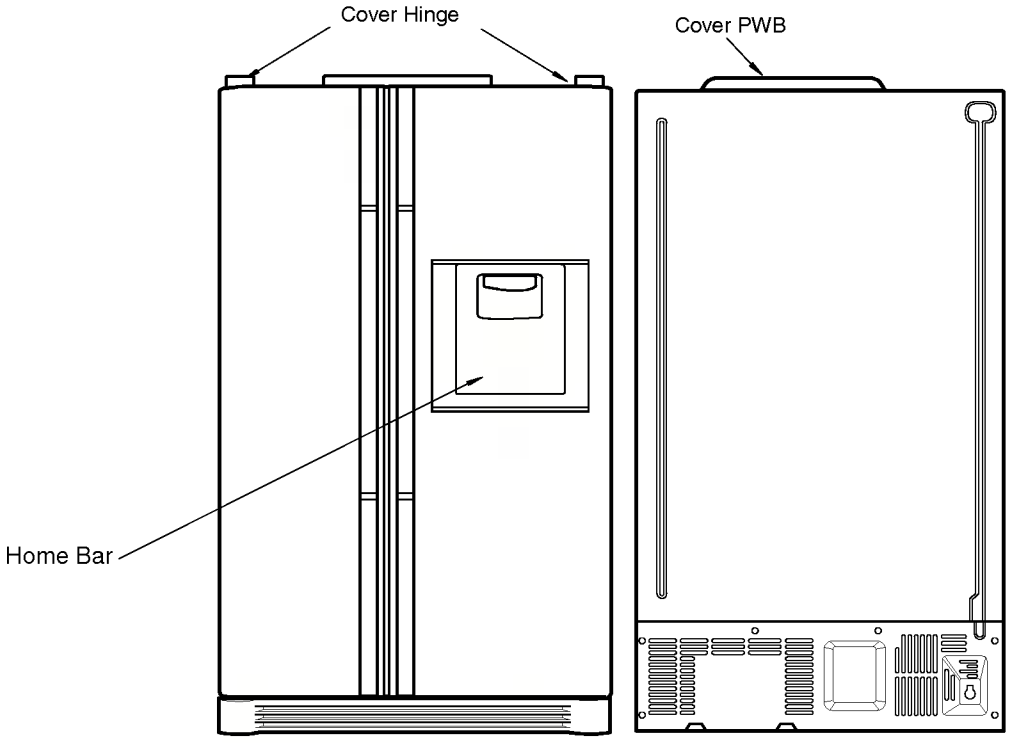

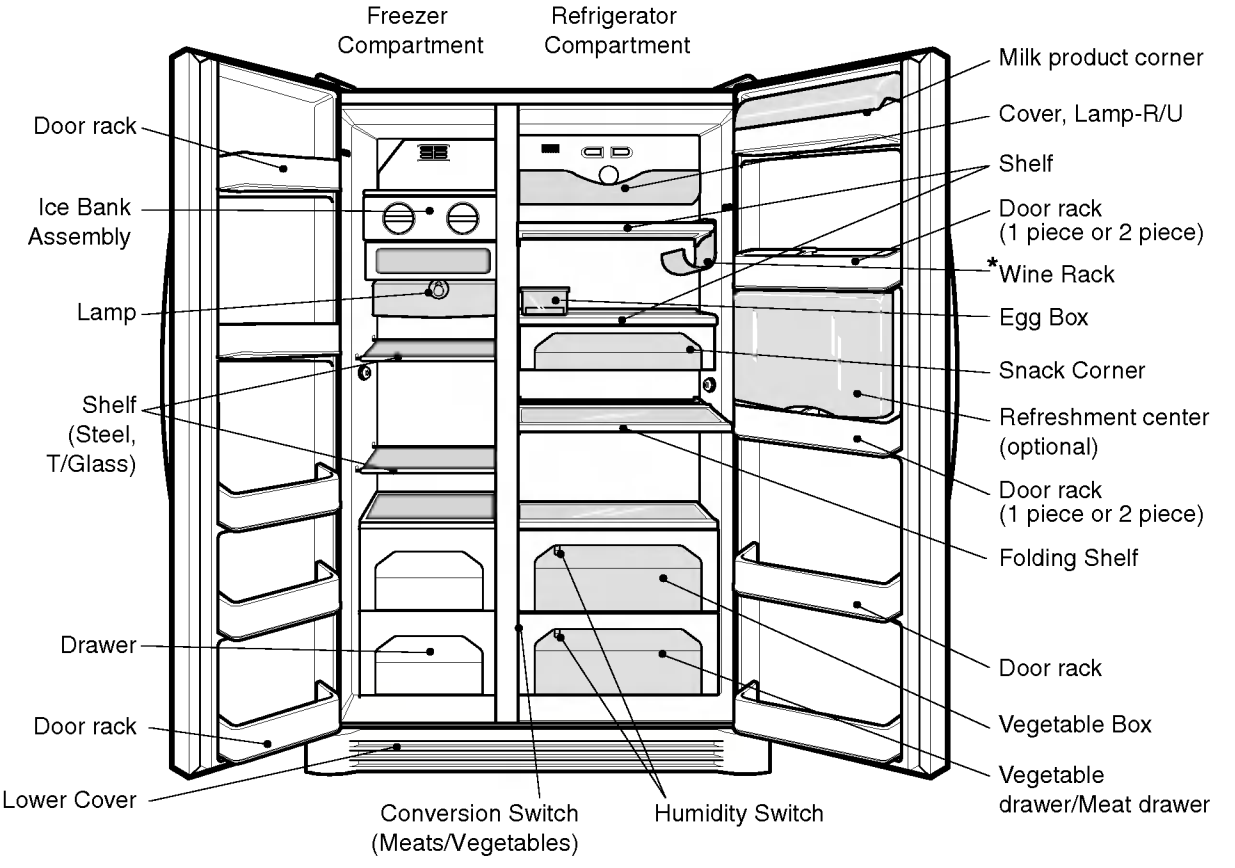

PARTS IDENTIFICATION

4. Ref No. : GR-B247, GR-B207, GR-B197

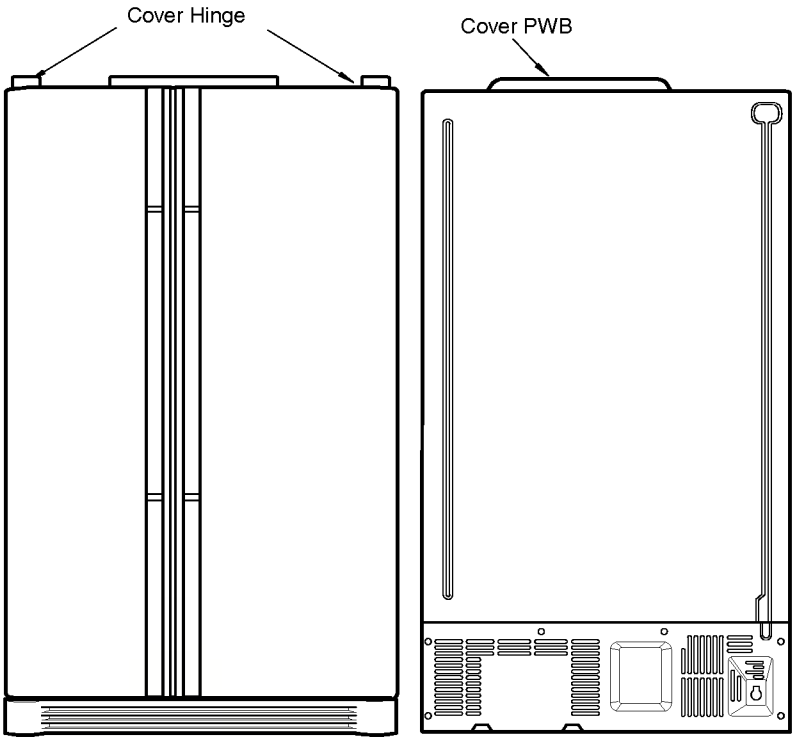

HOW TO INSTALL REFRIGERATOR

1. How to Adjust Door Height of Refrigerator

■ Make the refrigerator level first. (If the refrigerator is not installed on the flat floor, the height of freezer and refrigerator door may not be the same.)

1. If the height of freezer door is lower than that of refrigerator compartment :

2. If the height of freezer door is higher than that of refrigerator compartment :

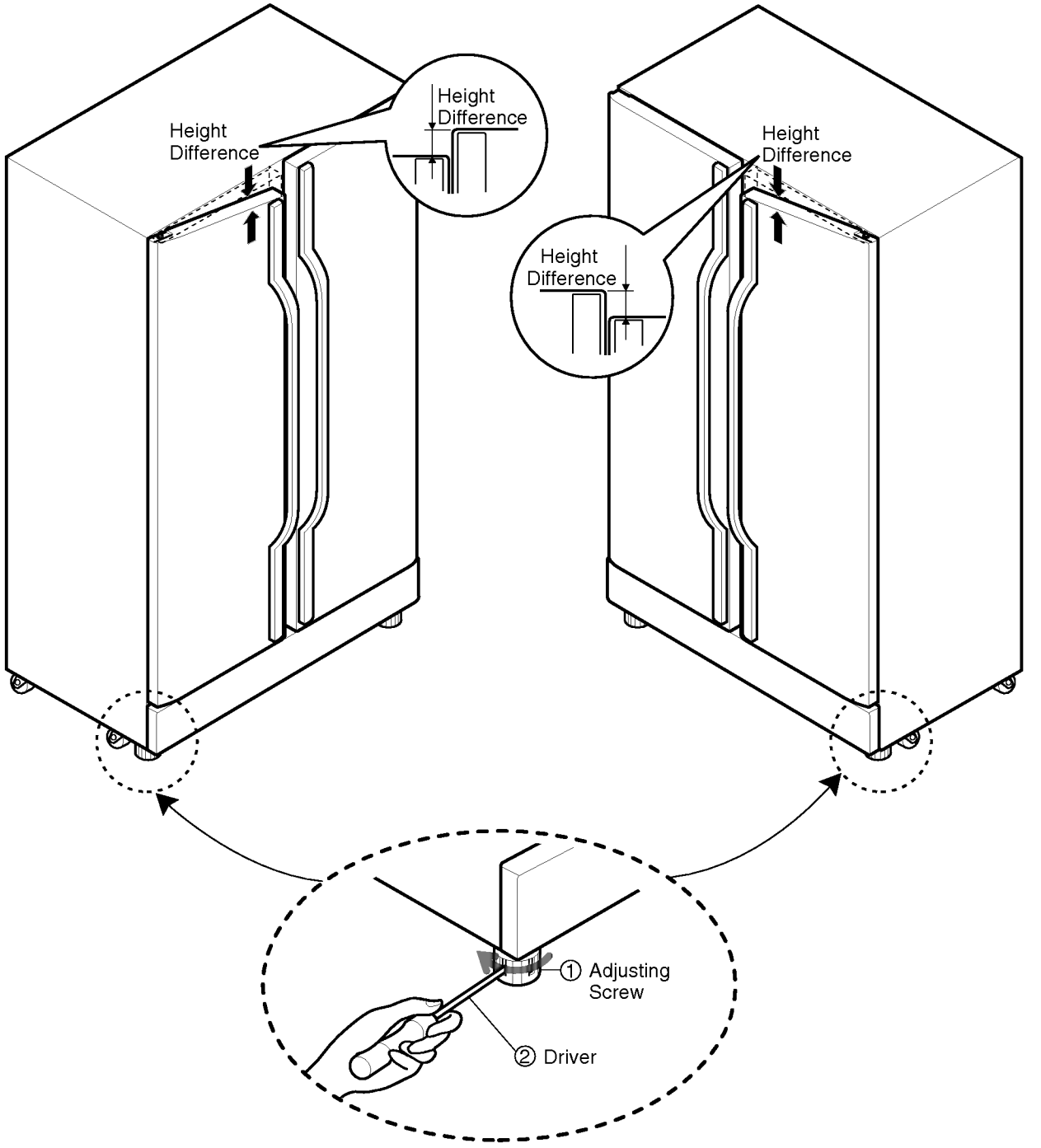

Insert a driver ❷ into the groove ❶ of adjusting screw and rotate driver in arrow direction (clockwise) until the refrigerator becomes horizontal.

Insert a driver ❷ into the groove ❶ of adjusting screw and rotate driver in arrow direction (clockwise) until the refrigerator becomes horizontal.

HOW TO INSTALL REFRIGERATOR

2. How to Install Water Pipe

■ Before Installation

1. The icemaker requires the water pressure of 1.5 - 8.5kgf/cm^2. (It is acceptable if city water fills a cup of 180cc with water for 3 seconds)
2. Install booster pump where the city water pressure is below 1.5kgf/cm^2 for normal operation of water and ice dispenser.
3. The total length of water pipe shall be less than 12m. Do not bend the pipe at right angle. If the length is more than 12m, there will be troubles on water supply due to water pressure drop.
4. Please install water pipe where there is no heat around.

2-1. When connecting directly to the water tap.

■ Please confirm the following installation parts.

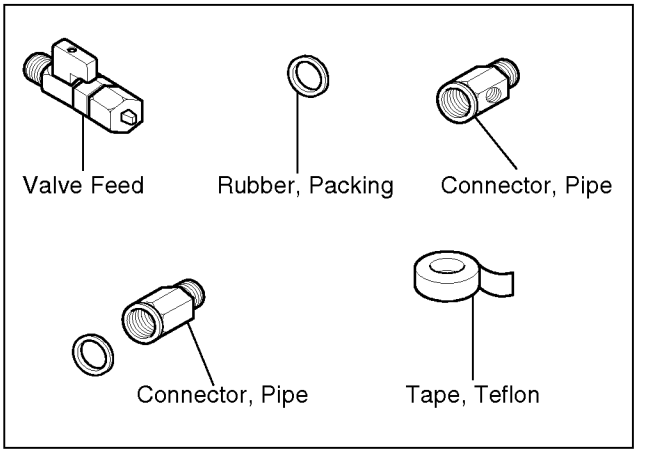

Class.	Shape and Spec.	Nomenclature	P/No	Remarks
Conve-rtible Water Valve	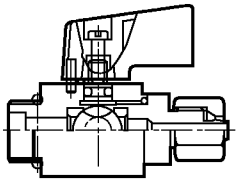	Valve Feed	5221JA3001A	Common Use
Water Conn-ector	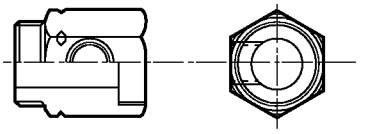	Connector, (MECH) Pipe Conversion Connector(3/4") Balance Conector(3/4") Packing(ø24x3t)	4932JA3003A 6631JA3004A 6631JA3004B 3920JA3001B	No Holes
	Connector, (MECH) Pipe 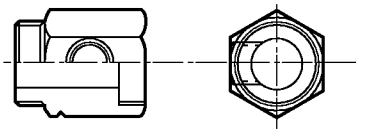	4932JA3003B Conversion Connector(W25) Balance Conectoor(W25) Packing(ø23x3t)	6631JA3004C 6631JA3004D 3920JA3001A	No Holes
		Connector, (MECH) Pipe Conversion Connector(W28) Balance Conector(W28) Packing(ø26x3t)	4932JA3003C 6631JA3004E 6631JA3004F 3920JA3001C	No Holes
		Connector, (MECH) Pipe Conversion Connector(1/2") Balance Conector(1/2") Packing(ø19x3t)	4932JA3003D 6631JA3004G 6631JA3004H 3920JA3001D	No Holes

HOW TO INSTALL REFRIGERATOR

1. Connection of Pipe Connector A and B.

1) Turn off main valve of water pipe.
2) Disconnect water tap from piping by loosening nuts.
3) Connect pipe connector A and B to piping after sealing the pipe connector with sealing tapes.
4) Connect feed valve to pipe connector A.
5) If there is only one tap water pipe, connect pipe connector A only and install feed pipe.

Caution : • Feed pipe should be connected to cold water line. If it is connected to hot water line, trouble may occur.
• Please check rubber packing when connecting feed pipe.

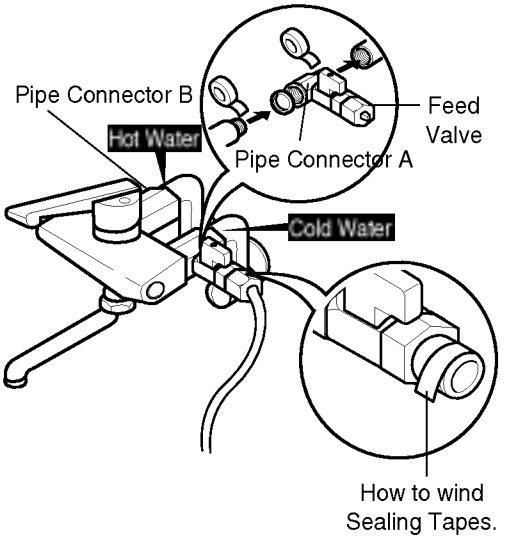

Single Lever Type Faucet (general)

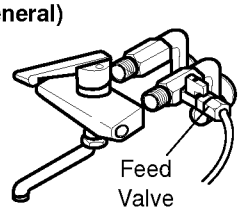

General Type

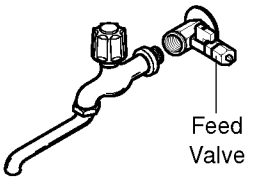

Two Hands Type Faucet

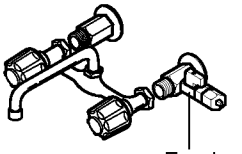

Single Lever Type Faucet (one hole, tech type and hand spray)

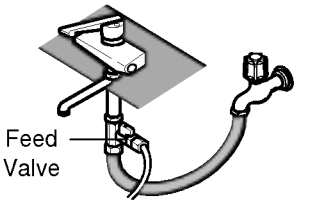

2. Water Supply

1) After the installation of feed water, plug the refrigerator to the earthered wall outlet, press the water dispenser button for 2 - 3 minutes, and confirm that the water comes out.
2) Check leakage at connecting part, then arrange water tube and locate the refrigerator at its regular place if there is no leaking.

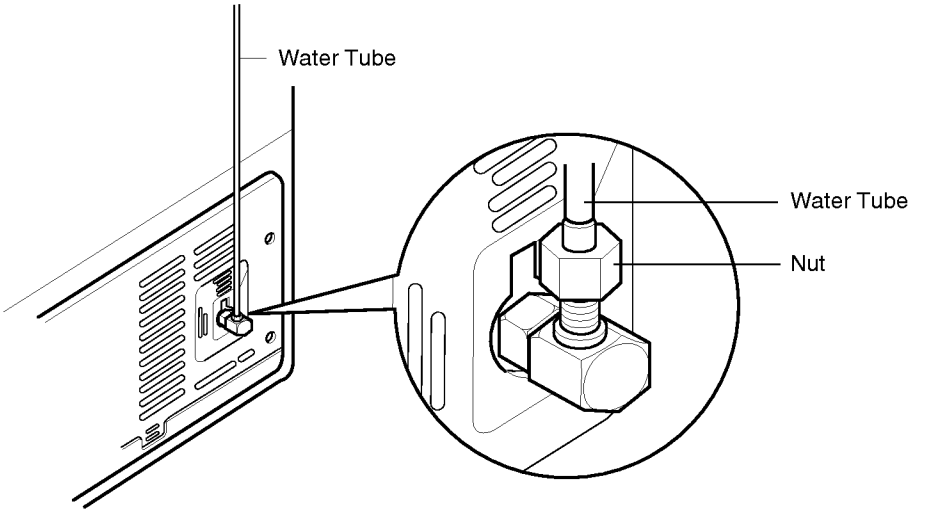

HOW TO INSTALL REFRIGERATOR

3. When customer uses bottled water.

*If customer wants to use bottled water, extra pump should be installed as shown below.

1. The pump system should not be on the floor (it may cause noise and vibration). Securely fasten the inlet and outlet nuts of pump.
2. If there is any leakage after installation, cut the water tube at right angle and reassemble.
3. When put the water tube end into the bottle, leave a clearance between bottle bottom and water tube end.
4 Check water coming out and any leakage.

Caution : • If feed tube is more than 4m, less water will come out due to pressure drops.
• Use standard feed tube to prevent leaking.

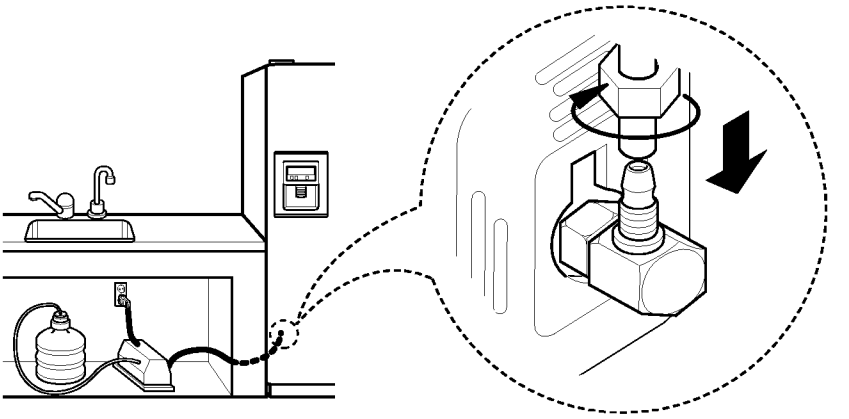

■ **Outternal Filter**

1. Filter Fixation

1) Connect feed tube to the filter outlet and water valve connecting tube.
2) Fix the filter at proper place around the sink where it is easy to replace the filter and to receive the cleaning water. Please consider the length of tube shall be less than 12m when locating filter.
3) When fixing the filter, use fixing plate and cable depending on the surrounding conditions.

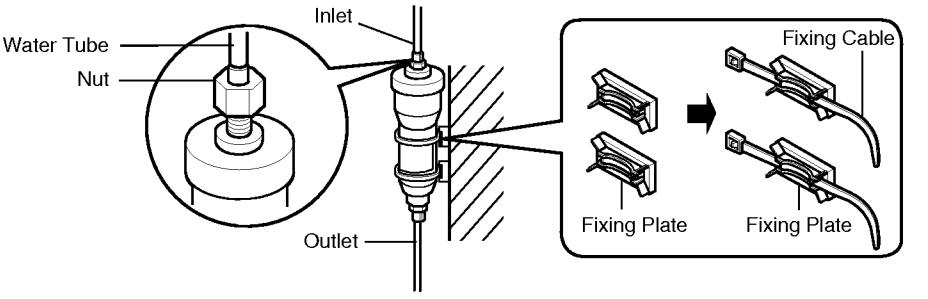

2. Filter Cleaning

1) Connect feed tube to the inlet of feed valve and filter.
2) Clean the main valve and feed valve with water for at least one minute until clean water comes out.

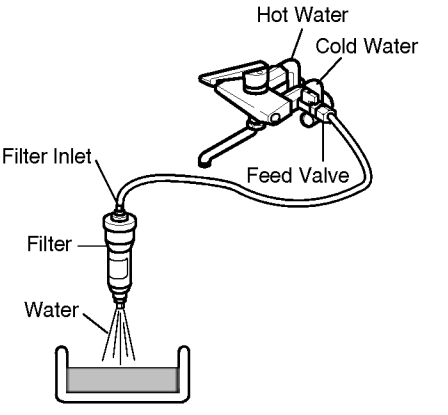

HOW TO INSTALL REFRIGERATOR

■ **Install Water Filter (Applicable to some models only)**

■ **Before Installing water filter**

1. Before installing the filter, take out the top shelf of the refrigerator after tilting it to the direction (①) and lifting it to the direction (②) and move it to the lower part.
2. Remove the lamp cover by pressing the protrusion under the cover and pulling the cover to the front.

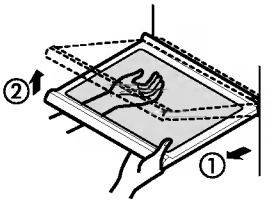

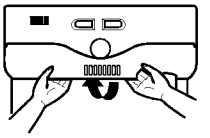

■ **Installing water filter**

1. **Initial installation of water filter**
   Remove the filter substitute cap by turning it counterclockwise (①) by 90 degrees and pulling it down.

Note : Keep it safe to use it later when you do not use the filter.

Remove the red cap from the filter and attach the sticker. Insert the upper part of the filter (①) after aligning with the guideline marked on the control box, and fasten it by turning it clockwise by 90 degrees.

Note : Check that the guideline and the fastening indication line are aligned.

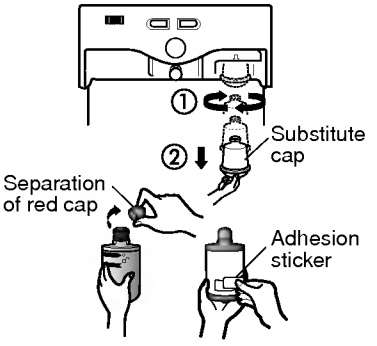

2. **Replacement of water filter**
   While holding the lower part of the filter, turn it counterclockwise (①) by 90 degrees and pull it down.

Note : Check that the guideline and the loosening indication line are aligned.

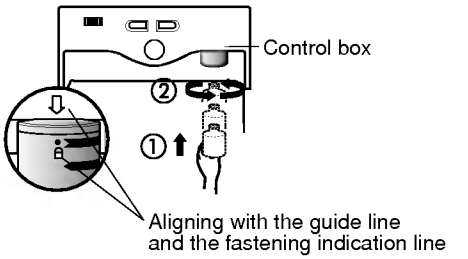

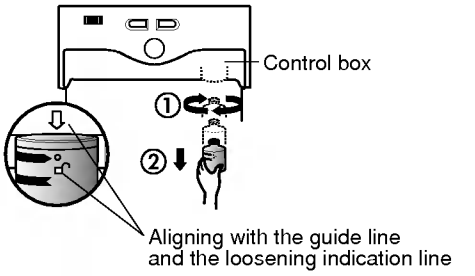

■ **After installing water filter**

Reassemble the lamp cover and the top shelf of the refrigerator. To place the top shelf of the refrigerator, raise the front part of the shelf a bit so that the hook of the shelf is fit into the groove.

In order to clean the water filter system, drain water for about 3 min.

Note : Then open the door of the refrigerator and check for water droppings on the shelf under the filter.

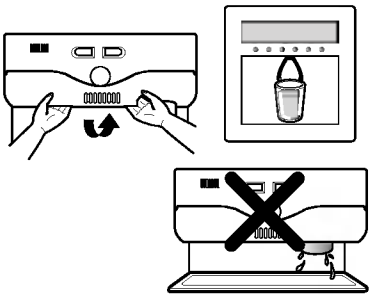

HOW TO INSTALL REFRIGERATOR

3. How to Control the Amount of Water Supplied to Icemaker.

3-1. Confirm the amount of water supplied to the icemaker.

1. Pull out the ice bank in the upper part of the freezer compartment.

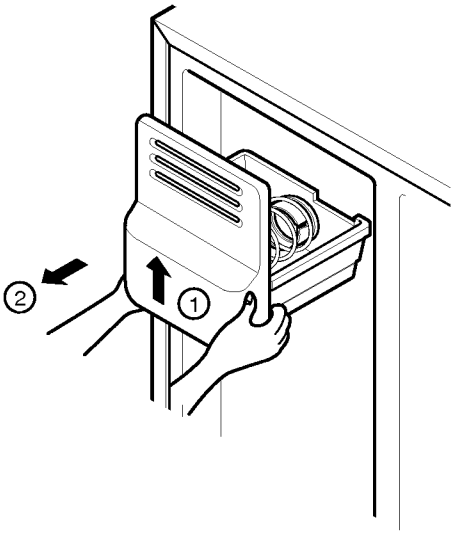

Caution : • Do not put hands or tools into the chute to confirm the operation of geared motor.
it may damage refrigerator or hurt hands.)
• Check the operation of motor with its operation noise.

2. Apply electricity after connecting water pipe.

1) Press test switch under the icemaker for two seconds as shown below.
2) The bell rings(ding~dong) and ice tray rotates and water comes out from the icemaker water tube.
3) The water shall be supplied two or three times into the tray. The amount of water supplied for each time is small. Put a water container under the ice tray and press test switch.
4) When ice tray rotates, the water in it will spill. Collect the spilt water and throw away into the sink.
5) When ice tray has finished rotation, water comes out from the water tube. Confirm the amounts of water in the ice tray. (refer to fig. The optimum amount of water is 110cc)

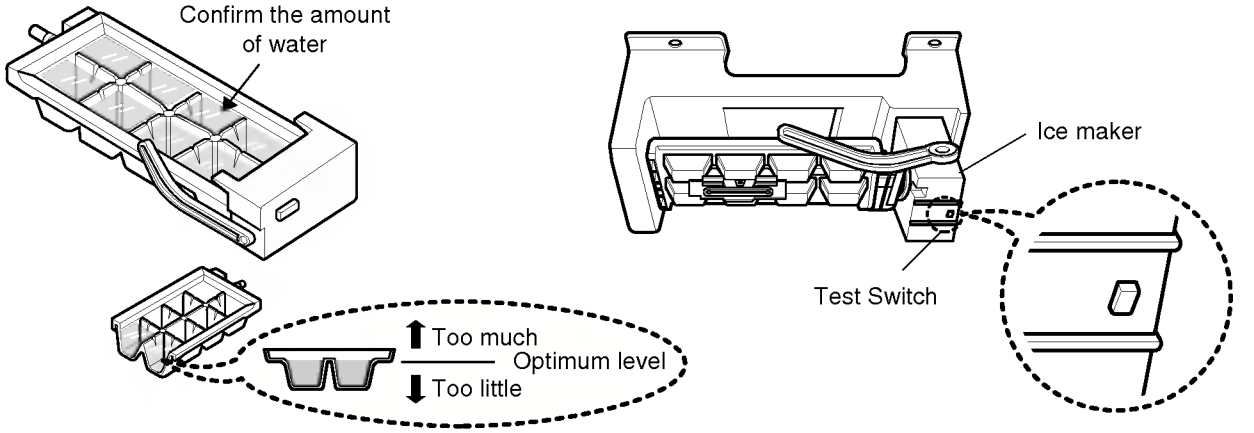

* It is acceptable if the adjusted level of water is a bit smaller than optimum level.

HOW TO INSTALL REFRIGERATOR

3-2. Control the amount of water supplied to the icemaker.

Caution : • Please unplug the power cord from the wall outlet and wait for more than three minutes before disconnecting PWB cover as 310V is applied in the control panel.

1. Disconnect PWB cover from the upper part of the refrigerator.

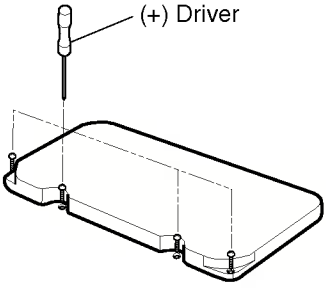

2. Adjust the amount of water supplied by using DIP switch.

■ **Water Supplying Time Control Option**

SWITCH NO			Water Suppling
S/W1	S/W2	S/W3	Time
OFF	OFF	OFF	6.5 Sec.
ON	OFF	OFF	5.5 Sec.
OFF	ON	OFF	6 Sec.
ON	ON	OFF	7 Sec.
OFF	OFF	ON	7.5 Sec.
ON	OFF	ON	8 Sec.
OFF	ON	ON	9 Sec.
ON	ON	ON	10 Sec.

1) The water supplying time is set at five seconds when the refrigerator is delivered.
2) The amount of water supplied depends on the setting time and water pressure (city water pressure).
3) If ice cube is too small, increase the water supplying time. This happens when too small water is supplied into the ice tray.
4) If ice cube sticks together, decrease the water supplying time. This happens when too much water is supplied into the ice tray.

Caution : When adjusting the amount of water supplied, adjust step by step. Otherwise the water may spill over.

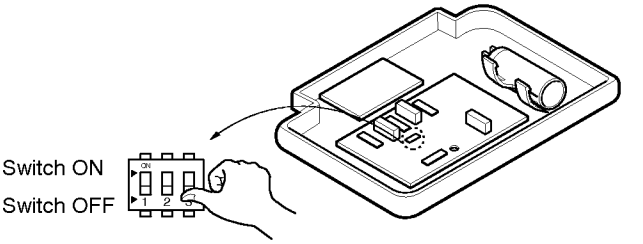

3. When adjustment of control switch for the amount of water supplied is complete, check the level of water in the ice tray.

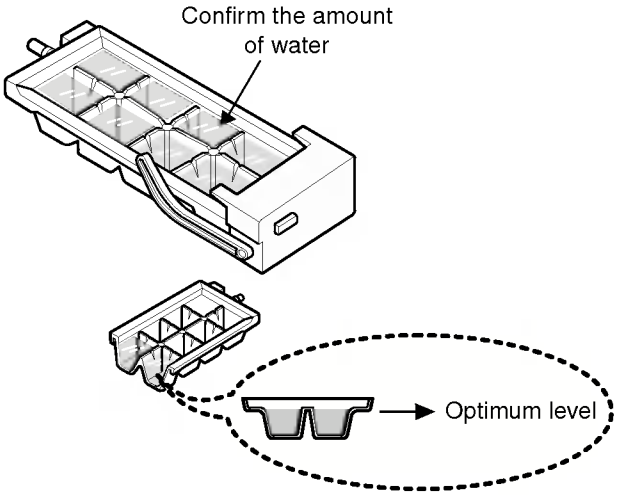

MICOM FUNCTION

1. Monitor Panel

1-1. GR-P247, GR-P207, GR-L247, GR-L207. GR-L197

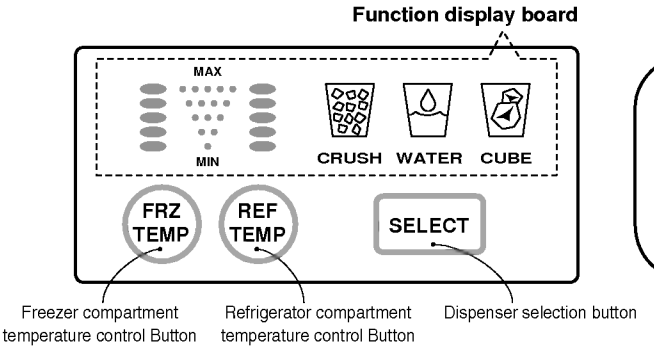

1-2. GR-C247, GR-C207, GR-B247, GR-B207, GR-B197

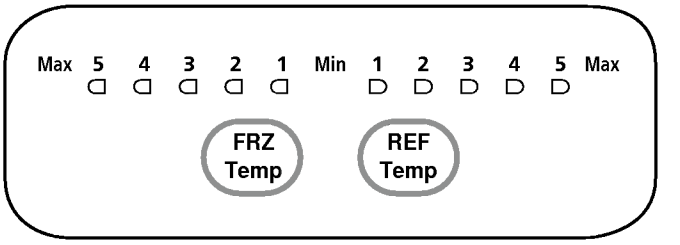

2. Description of Function

2-1. Funnction of Temperature Selection

Division	Power Initially On	1st Press	2nd Press	3th Press	4th Press
Change of Indication Lamp	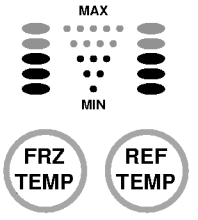	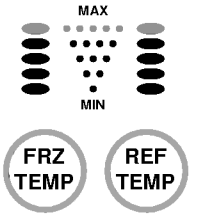	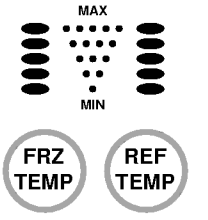	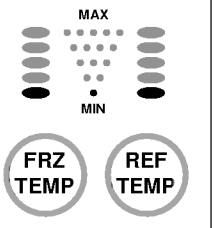	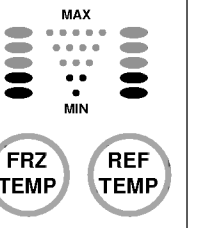
Temperature Control	Medium	Medium Max	Max	Min	Medium Min
Freezer Control	-19 °C (-18 °C) <-19 °C>	-22 °C (-20.5 °C) <-20.5 °C>	-23 °C (-22 °C) <-22 °C>	-15 °C <-16.5 °C>	-17 °C <-18 °C>
Refrigeration Control	3 °C <2 °C>	1.5 °C <1 °C>	0°C <0 °C>	6 °C (7 °C) <4.5 °C>	4.5 °C <3 °C>

* The temperature can vary ±3 °C depending on the load condition.

*( ) : 127V/60Hz, 110~115V/60Hz, 115V/60Hz Rating ONLY.

*< > : TAIBEI

1. When power is initially applied or reapplied after power cut, “Medium” is automatically selected.
2. When the temperature selection switch in the freezer and refrigerator compartments is pressed, the light is on in the following sequence:
   "Medium" → "Medium Max" → "Max" → "Min" → "Medium Min" → "Medium"
3. The temperature setting condition of freezer and refrigerator compartments shall not be indicate in the standard model (GR-P247, GR-P207, GR-L247, GR-L207, GR-L197, GR-C247, GR-C207, GR-B247, GR-B207, GR-B197) when refrigerator or home bar door is closed.

MICOM FUNCTION

2-2. Automatic ice maker

- The automatic ice maker can automatically make 8 pieces of ice cube at a time, 80 pieces a day. But these quantities may be varied according to various conditions including how many times the refrigerator door opens and closes.
- Ice making stops when the ice storage bin is full.
- If you don't want to use automatic ice-maker, change the ice-maker switch to ON-OFF.
  If you want to use automatic ice-maker again, change the switch to OFF-ON.

NOTE : It is normal that a noise is produced when ice made is dropped into the ice storage bin.

2-3. When ice maker does not operate smoothly

Ice is lumped together

- When ice is lumped together, take the ice lumps out of the ice storage bin, break them into small pieces, and then place them into the ice storage bin again.
- When the ice maker produces too small or lumped together ice, the amount of water supplied to the ice maker need to adjusted. Contact the service center.

✻ If ice is not used frequently, it may lump together.

Power failure

- Ice may drop into the freezer compartment. Take the ice storage bin out and discard all the ice then dry it and place it back. After the machine is powered again, crushed ice will be automatically selected.

The unit is newly installed

- It takes about 12 hours for a newly installed refrigerator to make ice in the freezer compartment.

MICOM FUNCTION

2-4. Control of variable type of freezing room fan

1. To increase cooling speed and load response speed, MICOM variably controls freezing room fan motor at the high speed of RPM and standard RPM.
2. MICOM only operates in the input of initial power or special freezing operation or load response operation for the high speed of RPM and operates in the standard RPM in other general operation.
3. If opening doors of freezing / cold storage room or home bar while fan motor in the freezing room operates, the freezing room fan motor normally operates (If being operated in the high speed of RPM, it converts operation to the standard RPM). However, if opening doors of freezing room or home bar, the freezing room fan motor stops.
4. As for monitoring of BLDC fan motor error in the freezing room, MICOM immediately stops the fan motor by determining that the BLDC fan motor is locked or poor if there would be position signal for more than 65 seconds at the BLDC motor. Then it displays failure (refer to failure diagnosis function table) at the display part of refrigerator, performs re-operation in the cycle of 30 minutes. If normal operation is performed, poor status is released and refrigerator returns to the initial status (reset).

2-5. Control of M/C room fan motor

1. The M/C room fan motor performs ON/OFF control by linking with the COMP.
2. It controls at the single RPM without varying RPM.
3. Failure sensing method is same as in fan motor of freezing fan motor (refer to failure diagnosis function table for failure display).

2-6. Door opening alarm

1. Buzzer generates alarm sound if doors are not closed even when more than a minute consecutively has passed with doors of freezing / cold storage room or home bar opened.
2. Buzzer rings three times in the interval of 0.5 second after the first one-minute has passed after doors are opened and then repeats three times of On/Off alarm in the cycle of every 30 seconds.
3. If all the doors of freezing / cold storage room or home bar are closed during door open alarm, alarm is immediately released.

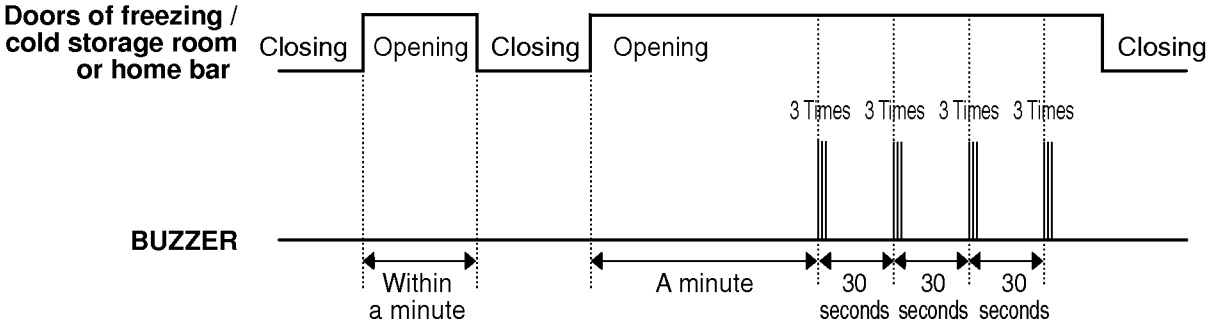

2-7. Ringing of button selection buzzer

1. If pressing the front display button, "Ding ~ " sound rings.

2-8. Ringing of compulsory operation, compulsory frost removal buzzer

1. If pressing the test button in the main PCB, "Phi ~ " sound rings.
2. In selecting compulsory operation, alarm sound is repeated and completed in the cycle of On for 0.2 second and Off for 1.8 second three times.
3. In selecting compulsory frost removal, alarm sound is repeated and completed in the cycle of On for 0.2 second , Off for 0.2 second, On for 0.2 second and Off for 1.4 second three times.

MICOM FUNCTION

2-9. Frost removal function

1. Frost removal is performed whenever total operation time of compressor becomes 7 ~ 7.5 hour.
2. In providing initial power (or returning power failure), frost removal starts whenever total operation time of compressor becomes 4 ~ 4.5 hour.
3. Frost removal is completed if temperature of a frost removal sensor becomes more than 5°C after starting frost removal. Poor frost removal is not displaced if it does not arrive at 5°C even if two hours have passed after starting frost removal.
4. No removal is done if frost removal sensor becomes poor (snapping or short-circuit).

2-10. Sequential operation of built-in product

Built-in products such as compressor, frost removal heater, freezing room fan, Cooling Fan and step motor damper are sequentially operated as follows for preventing noise and part damage occurred due to simultaneous operation of a lot of parts in applying initial power and completing test.

	Function	Load Operation Sequence	Remark
In applying Initial power	When temperature of a frost removal sensor becomes more than 45°C (In purchase, movement)	POWER ON → (0.5 sec.) COMP ON → (0.3 sec.) F-FAN & C-FAN ON → (0.3 sec.) STEP MOTOR DAMPER ON → (0.3 sec.) HOME BAR HEATER ON	If error occurs during operation, initial operation is not done.
	When temperature of a frost removal sensor becomes less than 45°C (In power failure, service)	POWER ON → (0.5 sec.) FROST REMOVAL HEATER ON → (8 sec.) FROST REMOVAL HEATER OFF → (0.3 sec.) HOME BAR/ PIPE HEATER ON → (5 sec.) HOME BAR/ PIPE HEATER OFF → (5.6 sec.) WATER SUPPLY & DISPENSE HEATER ON → (5 sec.) COMP ON → (0.3 sec.) F-FAN & C-FAN ON	
TEST MODE	Test mode 1 (Compulsory function)	TEST S/W (Press Once) → OTHER LOAD OFF → (0.3 sec.) COMP ON → (0.3 sec.) F-FAN & C-FAN ON → (0.3 sec.) STEP MOTOR DAMPER OPEN	If pressing switch once more in the test mode 2 or temperature of a frost removal sensor is more than 5°C, it immediately returns to the test mode for initial operation (COMP operates after 7 minutes).
	Test mode 2 (Compulsory frost removal)	TEST S/W (Press 2 times) → COMP OFF → (0.3 sec.) F-FAN & C-FAN OFF → (0.3 sec.) FROST REMOVAL HEATER ON → (0.3 sec.) STEP MOTOR DAMPER CLOSE	

MICOM FUNCTION

2-15. Failure Diagnosis Function

1. Failure diagnosis function is function to facilitate service when nonconforming matters affecting performance of product during use of product.
2. In occurrence of failure, pressing the function adjustment button does not perform function and only alarm sound (“Ding~”) rings.
3. If nonconforming matters occurred are released during display of failure code, MICOM returns to the original state (Reset).
4. Failure code is displayed on the display part of setting temperature for the freezing room and the display part of setting temperature for the cold storage room of LED, which are placed at the display part of a refrigerator. All the LED graphics other than a failure code are turned off.

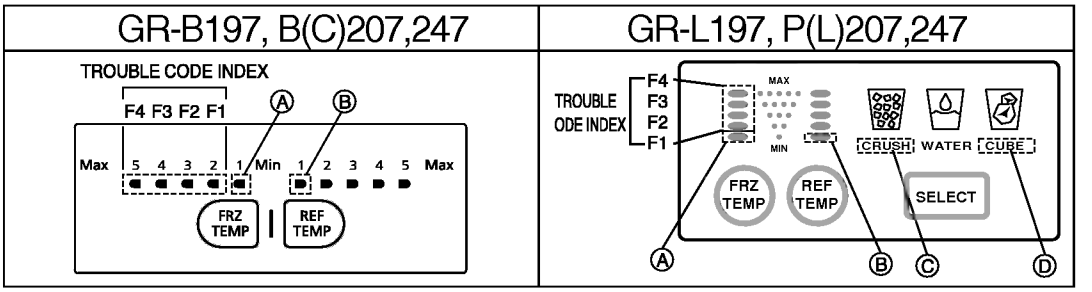

: On ● : Off ❍ : Normal

No.	Trouble items	Trouble Code Indicator				Troubles	Operation Status During Trouble				
		F4	F3	F2	F1		Compressor	Freezer Fan	Cooling Fan	Defrost Heater	Stepping Motor Damper
1	Abnormal freezer(F) sensor	●	●	●	⌖	Freezer sensor is cut or short-circuited	15 min on/ 15 min off	Standard RPM	❍	❍	❍
2	Abnormal refrigerator sensor 1(R1) (upper shelf in the refrigerator)	●	●	⌖	●	Upper shelf refrigerator sensor is cut or short-circuited.	❍	Standard RPM	❍	❍	Open for 10min / Close for 15min
3	Abnormal refrigerator sensor 2(R2) (lower shelf in the refrigerator)	Note 1)				Lower shelf refrigerator sensor is cut or short-circuited.	❍	Standard RPM	❍	❍	❍
4	Abnormal defrost sensor	●	⌖	●	●	Defrost sensor is cut or short-circuited	❍	Standard RPM	❍	No defrost	❍
5	Faulty defrost	⌖	⌖	⌖	⌖	Defrost heater and temperature fuse are cut and disconnected. (Indicates after at least four hours when troubles occur)	❍	Standard RPM	❍	❍	❍
6	Abnormal freezer BLDC fan motor	⌖	●	●	⌖	No position-signal over 65s when fan motor operate	❍	OFF (check opeation per 30min. If normal condition, reset)	❍	❍	❍
7	Abnormal cooling BLDC fan motor	●	●	⌖	⌖	No position-signal over 65s when fan motor operate	❍	❍	OFF (check opeation per 30min. If normal condition, reset)	❍	❍
8	Abnormal room temperature sensor	Note 1)				Room temperature sensor (RT-Sensor) is cut or short-circuited.	❍	❍	❍	❍	❍
9	Abnormal icemaker sensor	Note 1)				Icemaker sensor is cut or short-circuited.	❍	❍	❍	❍	❍
10	Abnormal icemaker unit	Note 1)				Fauity motor or hall IC in icemaker unit. Lead wire is cut or shotr-circuited. Faulty motor driving circuits	❍	Standard RPM	❍	❍	❍

MICOM FUNCTION

Note1) The abnormality of RT-Sensor, R2-Sensor Icemaker Unit, and Icemaker-Sensor is not indicated in trouble code but it is indicated when checking LED (when pressing both freezer temperature control button and refrigerator temperature control button for more than 1 second at the same time).

RT-Sensor	Normal : Ⓐ LED on,	Abnormal : Ⓐ LED Off.	The rest of LEDs are all on.
R2-Sensor	Normal : Ⓑ LED on,	Abnormal : Ⓑ LED Off.	
Icemaker Unit	Normal : Ⓒ LED on,	Abnormal : Ⓒ LED Off.	
Icemaker Sensor	Normal : Ⓓ LED on,	Abnormal : Ⓓ LED Off.	

2-16. Test Function

1. The purpose of test function is to check function of the PCB and product and to search for the failure part at the failure status.
2. Test button is placed on the main PCB of refrigerator (test switch), and the test mode will be finished after maximum 2 hours irrespective of test mode and then is reset to the normal status.
3. Function adjustment button is not perceived during performance of test mode but only warning sounds ring.
4. In finishing test mode, always pull the power cord out and then plug-in it again for the normal state.
5. If nonconforming contents such as sensor failure are found during performance of test mode, release the test mode and display the failure code.
6. Even if pressing the test button during failure code display, test mode will not be performed.

MODE	HANDLING	CONTENTS	REMARKS
Test 1	Press TEST s/w once.	1. Compressor continuously operates. 2. Freezer fan (high speed RPM), Cooling fan continuously operates. 3. Defrost heater is off. 4. All display LEDs are on. 5. Stepping motor damper is in open conditions. (baffle is open)	- Forced operate. - Freezer fan is off when door is opened.
Test 2	Press TEST s/w once at TEST1 conditions.	1. Compressor is off 2. Freezer fan, Cooling fan are off. 3. Defrost heater is on. 4. All display LEDs are off. (Freezer room “2” LED and Refrigerator room “2” LED are only ON.) 5. Stepping motor damper is in closed. (baffle is closed).	- It returns to normal conditions when the temperature of defrost sensor is above 5°C. - Forced defrost.
Normal Conditions	Press TEST s/w once at TEST2 conditions.	Returns to the initial conditions.	Compressor starts after seven minutes delay.

EXPLATION FOR MICOM CIRCUIT

1. Explanation for PWB circuit

1-1. Power circuit

1. GR-L197, GR-L207, GR-L247, GR-P207, GR-P247, GR-B197, GR-B207, GR-B247, GR-C207, GR-C247

Power circuit consists of SMPS (SWITCHING MODE POWER SUPPLY) power. The SMPS consist of the rectifying part (BD1, CE1) converting AC voltage to DC voltage, the switching part (IC2) switching the converted DC voltage, transformer transferring energy of the primary side of the switching terminal to the secondary side and the feedback part (IC3, IC4) transferring it to the primary side.

Caution : Since high voltage (DC310V) is maintained at the power terminal, please take a measure after more than 3 minutes have passed after removing power cords in the abnormal operation of a circuit.

Voltage of every part is as follows:

Part	VA1	CE1	CE2	CE3	CE4	CE
Voltage	220 Vac	inspection Vdc	16 Vdc	12 Vdc	15.5 Vdc	5 Vdc

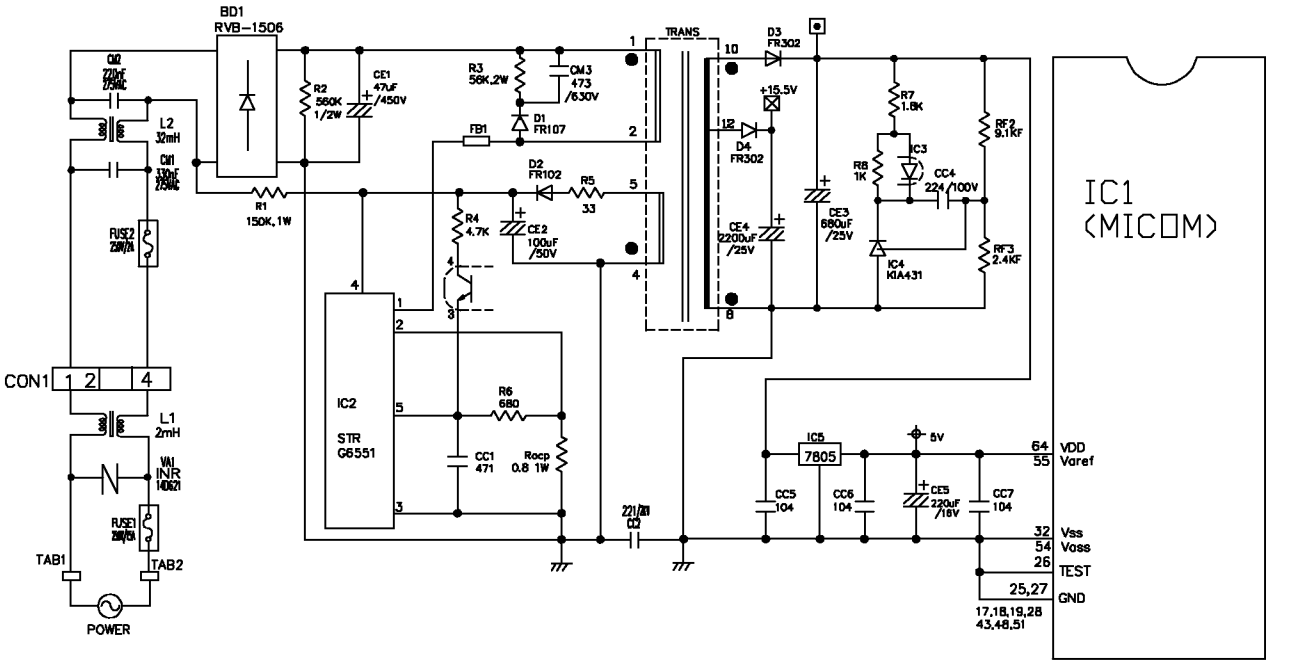

EXPLATION FOR MICOM CIRCUIT

1-2. Oscillation circuit

Oscillation circuit is a circuit with the purpose of generating basic time for clock occurrence for synchronization and time calculation in relation with information transmission/reception of inside elements of IC1 (MICOM). The OSC1 must always use rated parts since if SPEC is changed, time calculated at the IC1 may be changed or no operation is done.

<GR-L197, GR-L207, GR-L247, GR-P207, GR-P247>

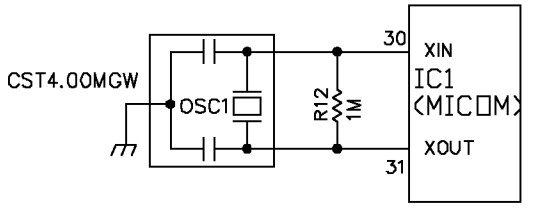

<GR-B197, GR-B207, GR-B247, GR-C207, GR-C247>

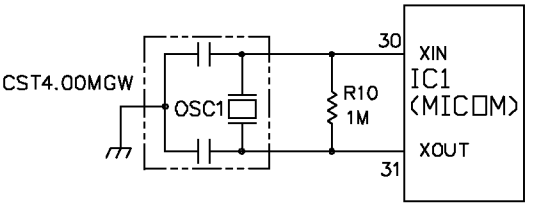

1-3. Reset circuit

The reset circuit is circuit allowing various parts such as RAM inside of MICOM (IC1) to initialize and the whole of function to start from the initial status, when initial power is input or when power is applied again to MICOM by a spontaneous power failure. 'LOW' voltage is applied to the reset terminal of MICOM in the beginning of power supply for a constant time (10ms). Reset terminal during general operation is 5V (No MICOM operates in failure of RESET IC).

<GR-L197, GR-L207, GR-L247, GR-P207, GR-P247>

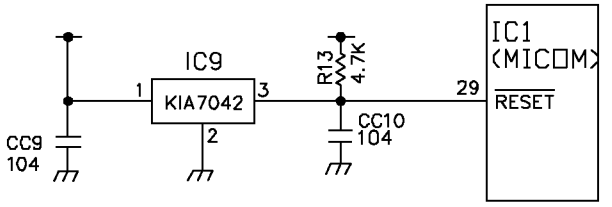

<GR-B197, GR-B207, GR-B247, GR-C207, GR-C247>

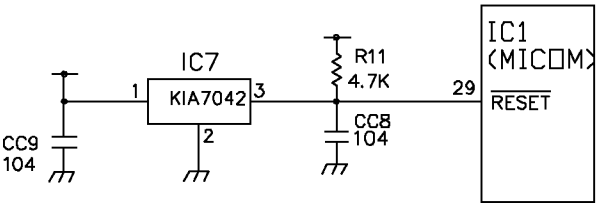

EXPLATION FOR MICOM CIRCUIT

1-4. Load/dispenser operation, buzzer driving, door opening circuit

1. LOAD DRIVING CIRCUIT

* InEven if opening the door of freezing room or cold storage room during operation of fan motor at the freezing room, this circuit does not stop and operates at the standard RPM. In addition, if doors of freezing room or cold storage room, the fan motor normally operates at the RPM previously operated.
* (A), (B), (C) and (D) of door switch for the freezing room or cold storage room are connected to the door open sensing circuit in parallel toward both ends of switch to determine door open at MICOM.
* Since a door switch of the home bar is connected to door switch (C), (D) of the cold storage room, it senses door opening if even one of both is opened.
* The fan motor is immediately stop if opening doors of the freezing room or cold storage room at the TEST mode and it immediately operates if closing them.

1) GR-L197, GR-L207, GR-L247, GR-P207, GR-P247

Type of Load		COMP	Frost Removal Heater	AC Converting Relay	R-room LAMP
Measuring part (IC6)		No.16	No.15	No.16	IC7-13
Status	ON	Within 1 V			
	OFF	12 V			

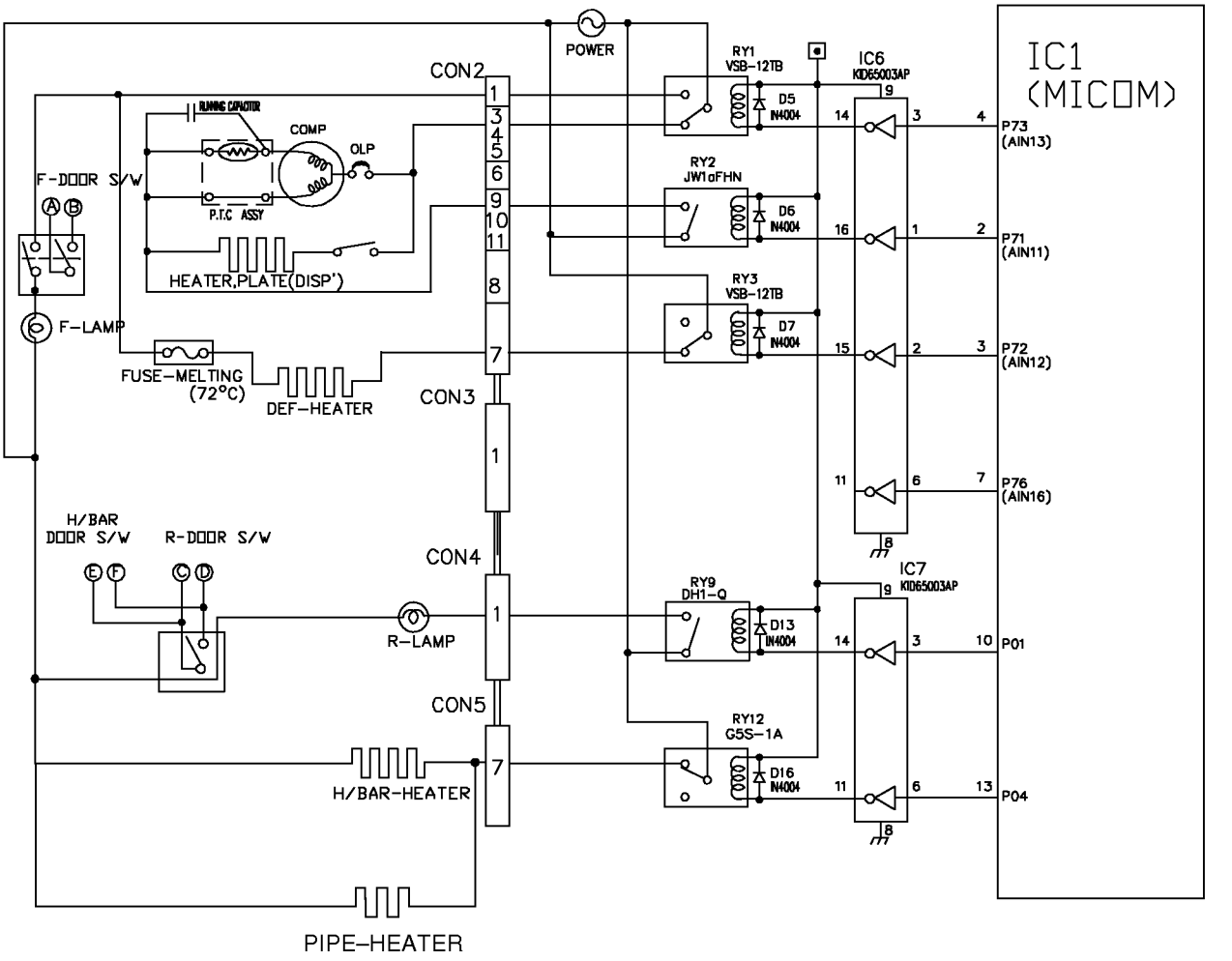

EXPLATION FOR MICOM CIRCUIT

2) GR-B197, GR-B207, GR-B247, GR-C207, GR-C247

✻ The fan motor at the freezing room does not stop but operates if opening doors of the freezing room or cold storage room or the home bar during operation of the fan motor at the freezing room.

✻ (A), (B), (C) and (D) of door switch for the freezing room or cold storage room are connected to the door open sensing circuit toward both ends of switch to determine door open at MICOM.

✻ Since a door switch of the home bar is connected to door switch (C), (D) of the cold storage room, it senses door opening if even one of both is opened.

Type of Load		COMP	Frost Removal Heater	AC Converting Relay	R-room LAMP	Homebar Heater
Measuring part (IC7)		No.10	No.11	No.12	No.14	No.16
Status	ON	Within 1 V				
	OFF	12 V				

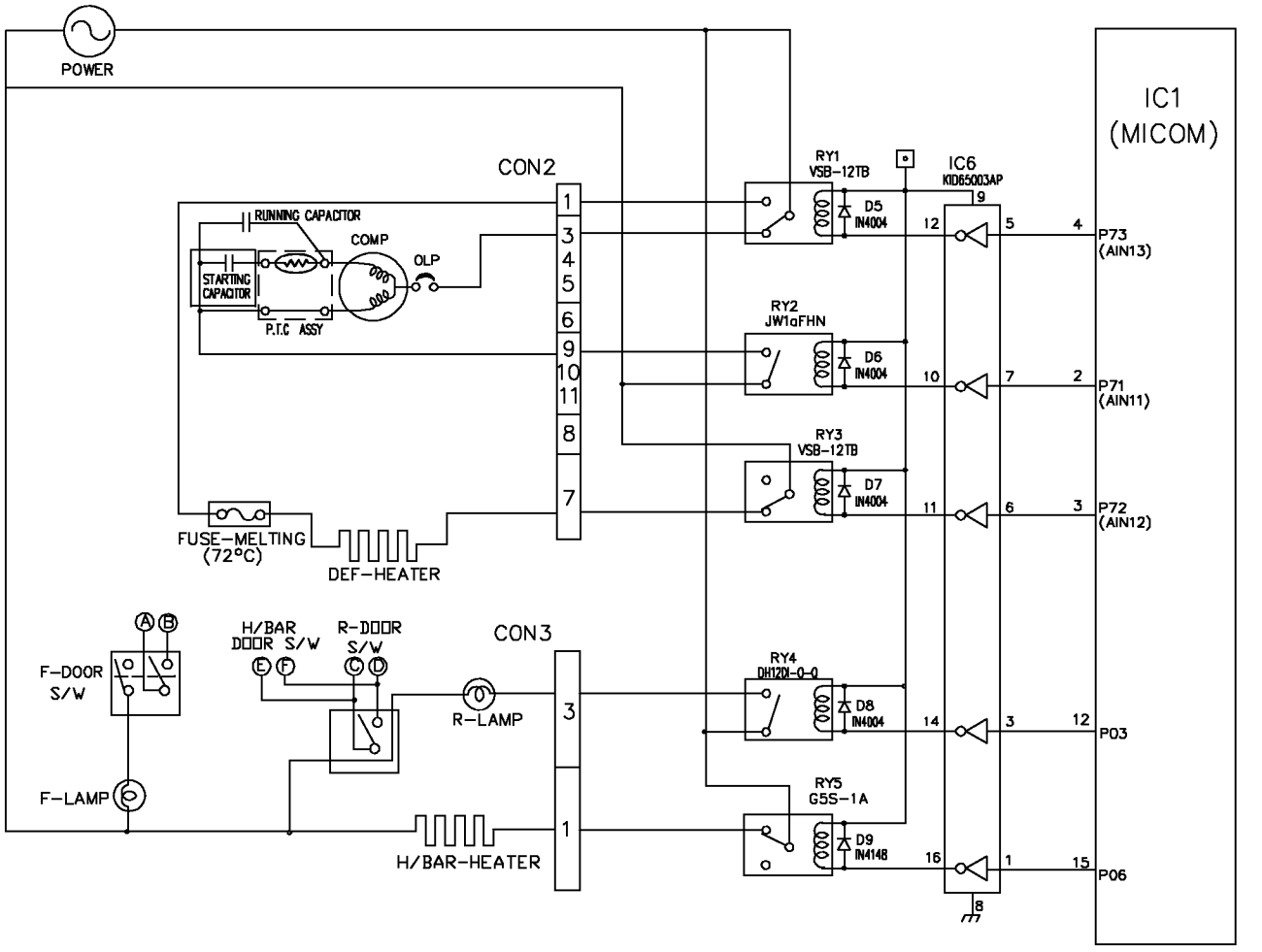

EXPLATION FOR MICOM CIRCUIT

2. Dispenser operation circuit

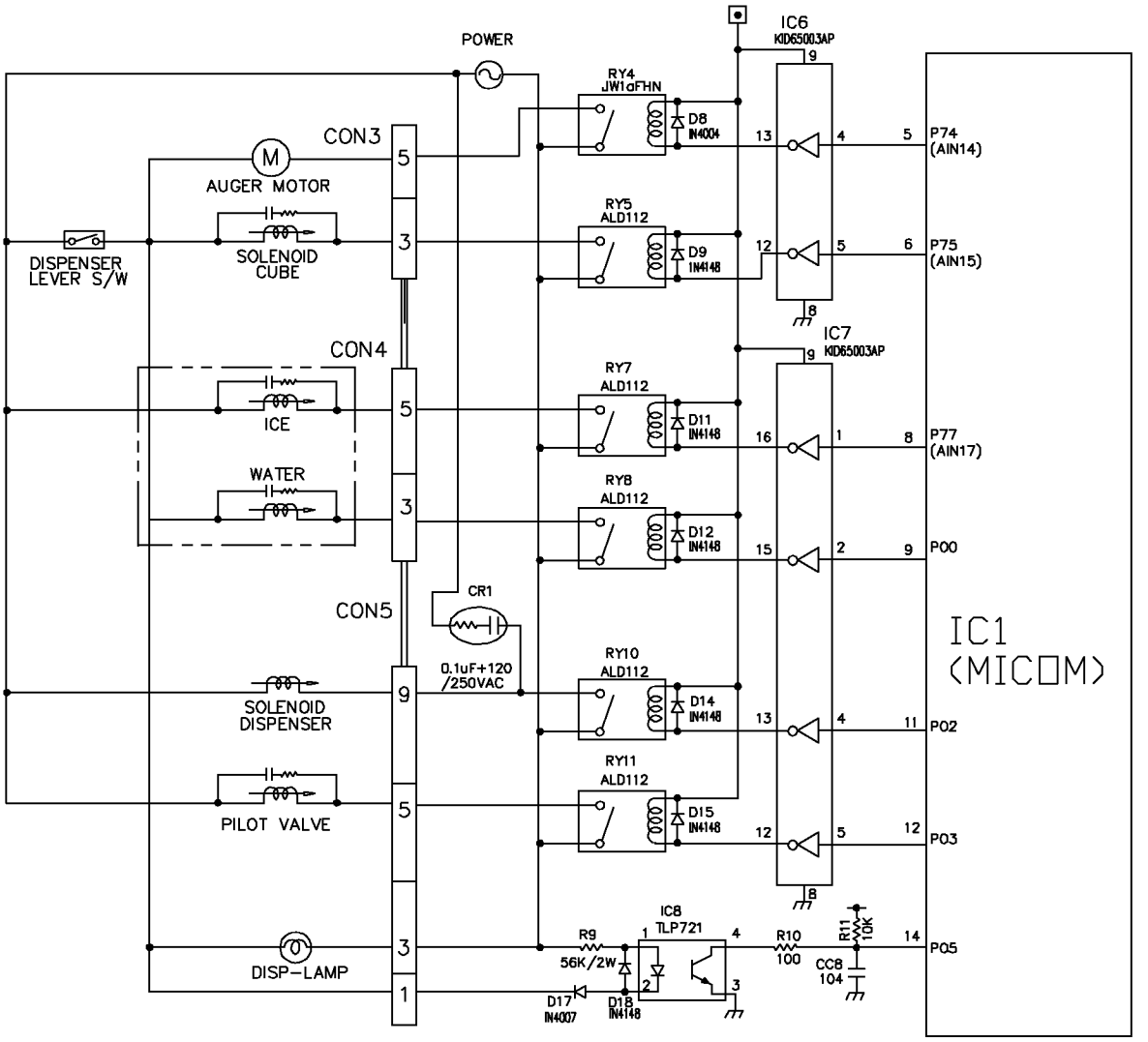

1) Check load driving status

Type of Load		GEARED MOTOR	SOLENOID CUBE	WATER VALVE		SOLENOID DISPENSER	HOME BAR HEATER	SOLENOID PILOT
				ICE	WATER			
Measuring part		IC6-No.13	IC6-No.12	IC6-No.11	IC6-No.10	No.12	No.10	No.16
Status	ON	Within 1 V						
	OFF	12 V						

2) Lever S/W sensing circuit

Measuring part / Lever S/W	IC1(Micom) (No. 16)
On(Press)	5 V 0 V (60 Hz)
OFF	5V

EXPLATION FOR MICOM CIRCUIT

3. Door opening sensing circuit

<GR-L197, GR-L207, GR-L247, GR-P207, GR-P247>

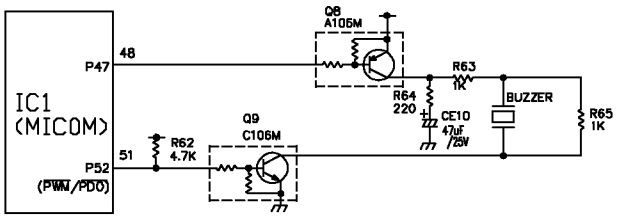

<GR-B197, GR-B207, GR-B247, GR-C207, GR-C247>

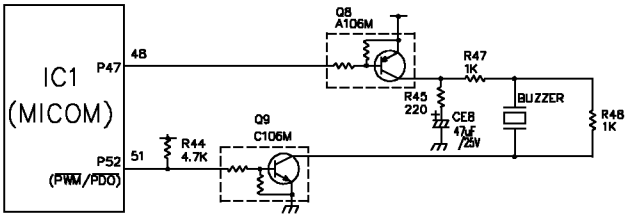

CONDITIONS / MEASURING POINTS	Bell sounds when button on dosplay is pressed.	Beep sounds when warning door opening.	OFF
IC1 (No. 48 Pin)	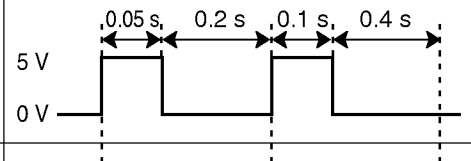	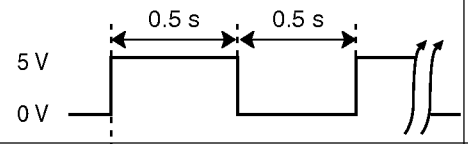	5 V
IC1 (No. 51 Pin)	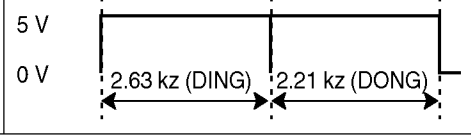	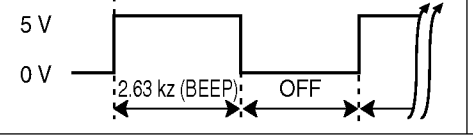	0 V

<GR-L197, GR-L207, GR-L247, GR-P207, GR-P247>

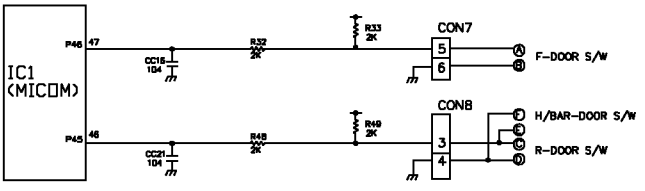

<GR-B197, GR-B207, GR-B247, GR-C207, GR-C247>

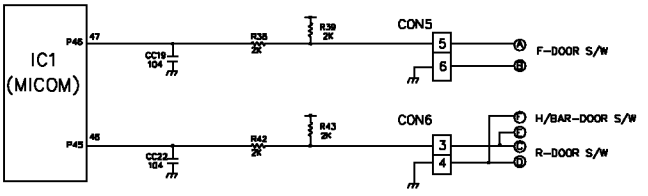

Measuring part / Door of Freezing/Cold Storage Room	IC1 (MICOM) No. 47, 46 Pin
Closing	5 V (Ⓐ - Ⓑ, Ⓒ - Ⓓ . S/W at both ends are at Off status)
Opening	5 V (Ⓐ - Ⓑ, Ⓒ - Ⓓ . S/W at both ends are at On status)

✻ Since door switch sensing switch (A), (B) are a separate switch even if the door switch of the freezing room normally operates, they may fail to sense door opening in the failure of switch at both ends of (A) and (B) or in failure of the L/wire.

✻ Lamp does at the cold storage room not turn on if the door switch of the cold storage room fails to sense the door open switch (c), (d) or the home bar switch.

EXPLATION FOR MICOM CIRCUIT

1-5. Temperature sensing circuit

1) GR-L197, GR-L207, GR-L247, GR-P207, GR-P247

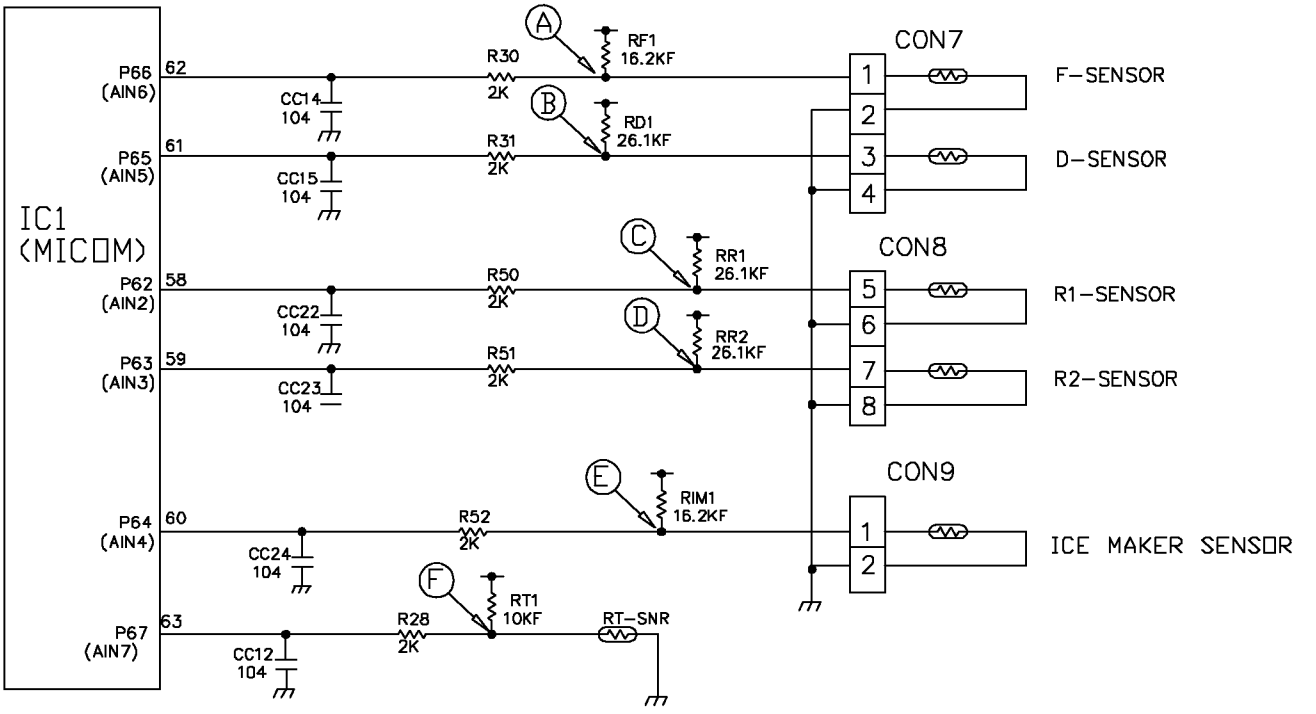

The above circuits are circuits attached to freezing room sensor or cold storage room sensor for adjusting setting temperature at the freezing room and cold storage room, ice-making sensor for sensing water temperature in ice-making, or an evaporator for sensing temperature of a frost removal sensor necessary for frost removal. Short or open status of every temperature sensor is as follows:

SENSOR	CHECK POINT	NORMAL(-30 ℃ ~ 50 ℃)	IN SHORT	IN OPEN
Freezing sensor	POINT Ⓐ Voltage	0.5 V~4.5 V	0 V	5 V
Frost removal sensor	POINT Ⓑ Voltage			
Cold storage sensor 1	POINT Ⓒ Voltage			
Cold storage sensor 2	POINT Ⓓ Voltage			
Ice making sensor	POINT Ⓔ Voltage			
Room temperature sensor	POINT Ⓕ Voltage			

EXPLATION FOR MICOM CIRCUIT

2) GR-B197, GR-B207, GR-B247, GR-C207, GR-C247

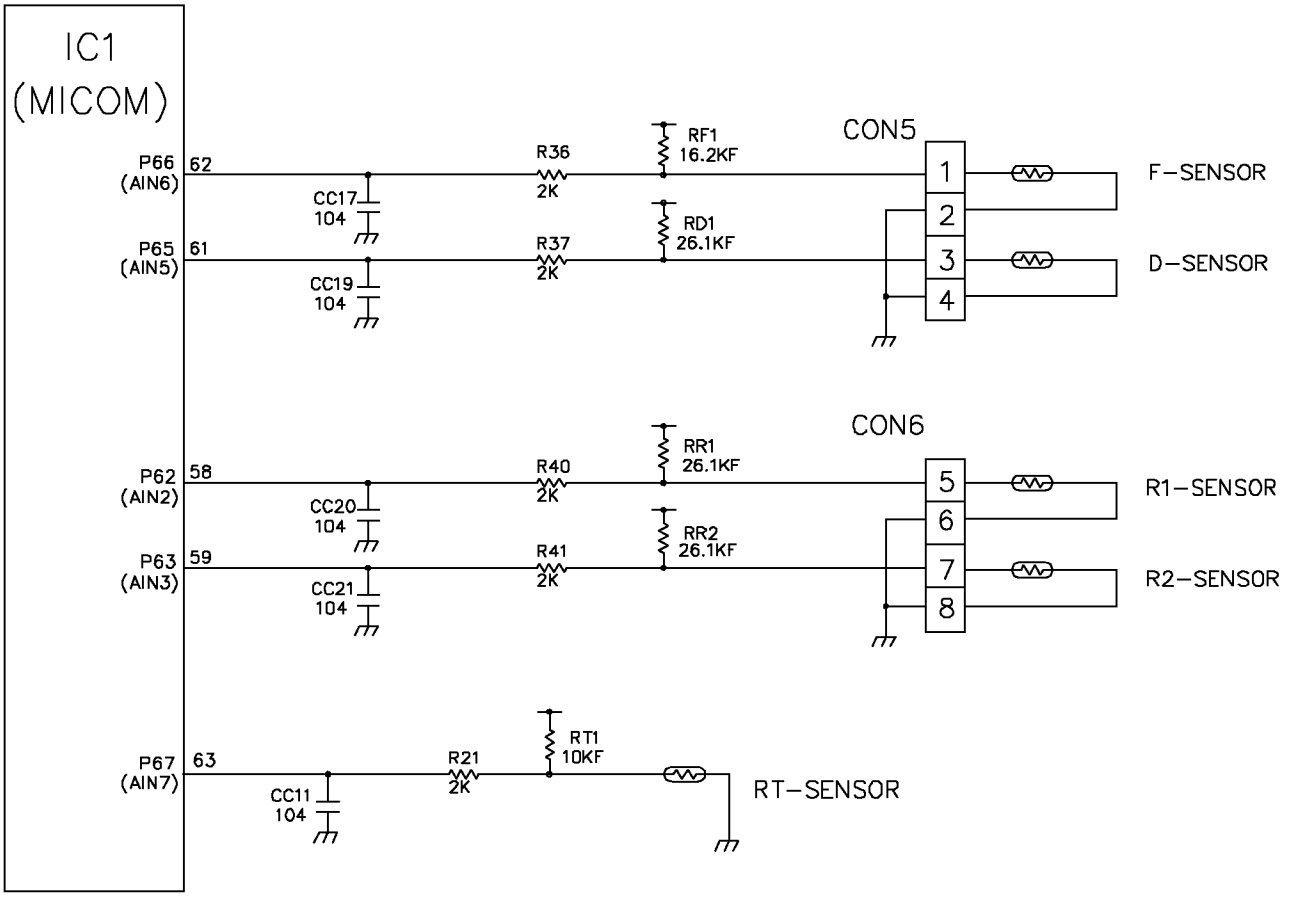

The above circuits are circuits attached to freezing room sensor or cold storage room sensor for adjusting setting temperature at the freezing room and cold storage room, ice-making sensor for sensing water temperature in ice-making, or an evaporator for sensing temperature of a frost removal sensor necessary for frost removal. Short or open status of every temperature sensor is as follows:

SENSOR	CHECK POINT	NORMAL(-30 ℃ ~ 50 ℃)	IN SHORT	IN OPEN
Freezing sensor	POINT Ⓐ Voltage	0.5 V~4.5 V	0 V	5 V
Frost removal sensor	POINT Ⓑ Voltage			
Cold storage sensor 1	POINT Ⓒ Voltage			
Cold storage sensor 2	POINT Ⓓ Voltage			
Room temperature sensor	POINT Ⓔ Voltage			

EXPLATION FOR MICOM CIRCUIT

1-6. Switch entry circuit

The following circuits are entry circuits for sensing signal form test S/W, electronic single motor damper reed S/W for examining refrigerator.

1) GR-L197, GR-L207, GR-L247, GR-P207, GR-P247

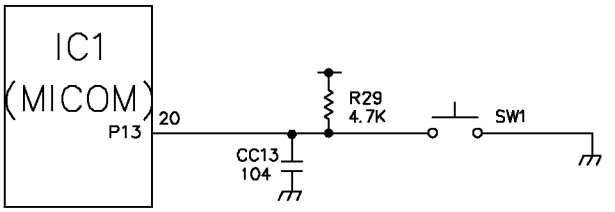

2) GR-B197, GR-B207, GR-B247, GR-C207, GR-C247

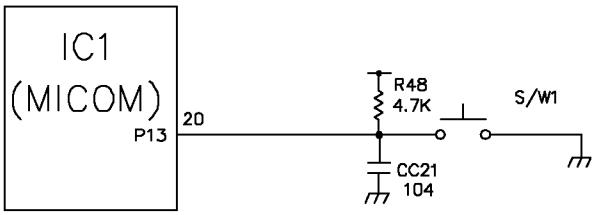

1-7. Option designation circuit (model separation function)

1) GR-L197, GR-L207, GR-L247, GR-P207, GR-P247

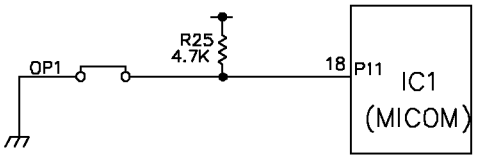

2) GR-B197, GR-B207, GR-B247, GR-C207, GR-C247

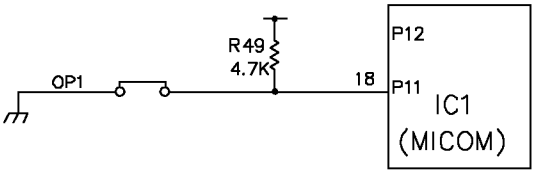

The above circuits are used for designating separation by model as option and notifying it to MICOM. Designation of option by model and the application standards are as follows:

▶ These circuits are accurately pre-adjusted in shipment from factory and so you must not additionally add or remove option.

Separation	Connection Status	Application Standard
OP1	Connection	Export model
	OUT	Domestic model

EXPLATION FOR MICOM CIRCUIT

1-8. Stepping motor operation circuit

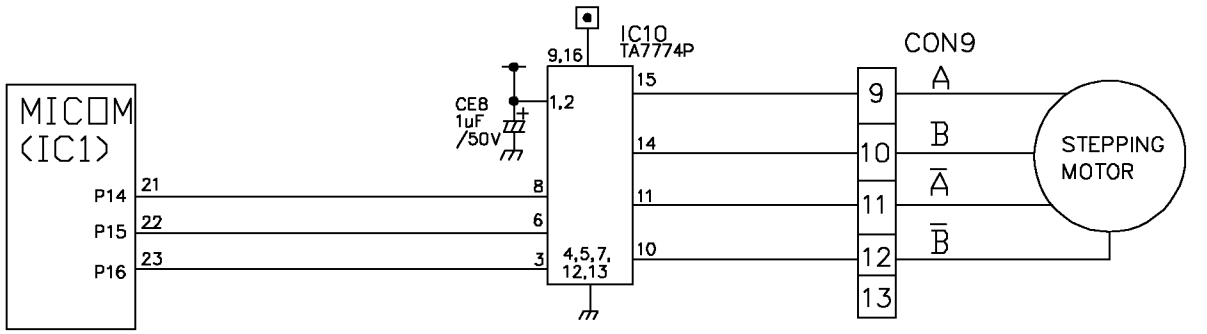

For motor driving method, rotation magnetism is formed at coils wound on each phase of motor and stator and so motor becomes to rotate if applying “High” signal to the IC8 (TA777AF) at the MICOM PIN 33 and outputting “High”, “Low” signal by step numbers fixed through MICOM PIN 34 and 35,.

Explanation) For driving method of the stepping motor, send signals in the cycle of 3.33 mSEC using terminal of MICOM PIN 33, 34 and 35 as shown in wave form of the following part.
These signals are output to the output terminal (No.10, 11, 14, 15) via the input terminal (No. 3, 6, 8) of the IC10 (TA7774F) as IC for motor driving. Output signals allow motor coils wound on each phase of stator to form rotation magnetic field and the motor to rotate. Inputting as below figure to the input terminal (INA, INB) as IC (TA7774AF) for motor driving allows motor coils wound on each phase of stator to form rotation magnetic field and the stepping motor damper to rotate

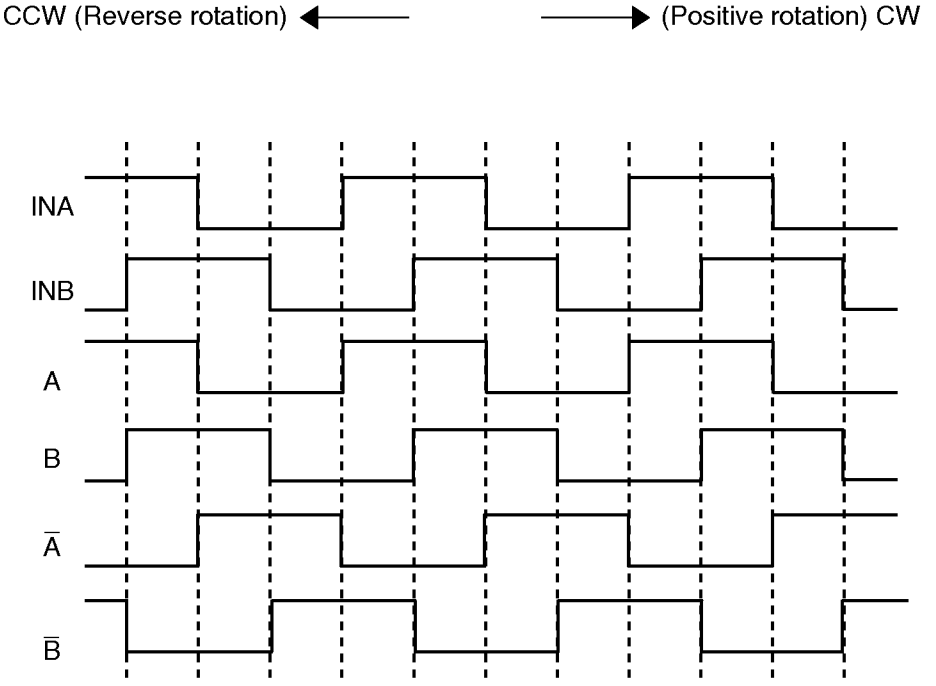

EXPLATION FOR MICOM CIRCUIT

1-9. Fan motor driving circuit (freezing room, M/C room)

1. This circuit performs function to make standby power '0' by cutting off power supplied to ICs inside of the fan motor in the fan motor OFF.
2. This is a circuit to perform a temporary change of speed for the fan motor and applies DC voltage up to 7.5V ~ 16V to motor.
3. This circuit performs function not to drive the fan motor further by cutting off power applied to the fan motor in the lock of fan motor by sensing the operation RPM of the fan motor.

1) GR-L197, GR-L207, GR-L247, GR-P207, GR-P247

	ⓐ, ⓓ part	ⓑ part	ⓔ part	ⓒ, ⓕ part
Motor OFF	5V	2V or less	2V or less	0 V
Motor ON	2 ~ 3V	12 ~ 14V	8 ~ 16V	0 V

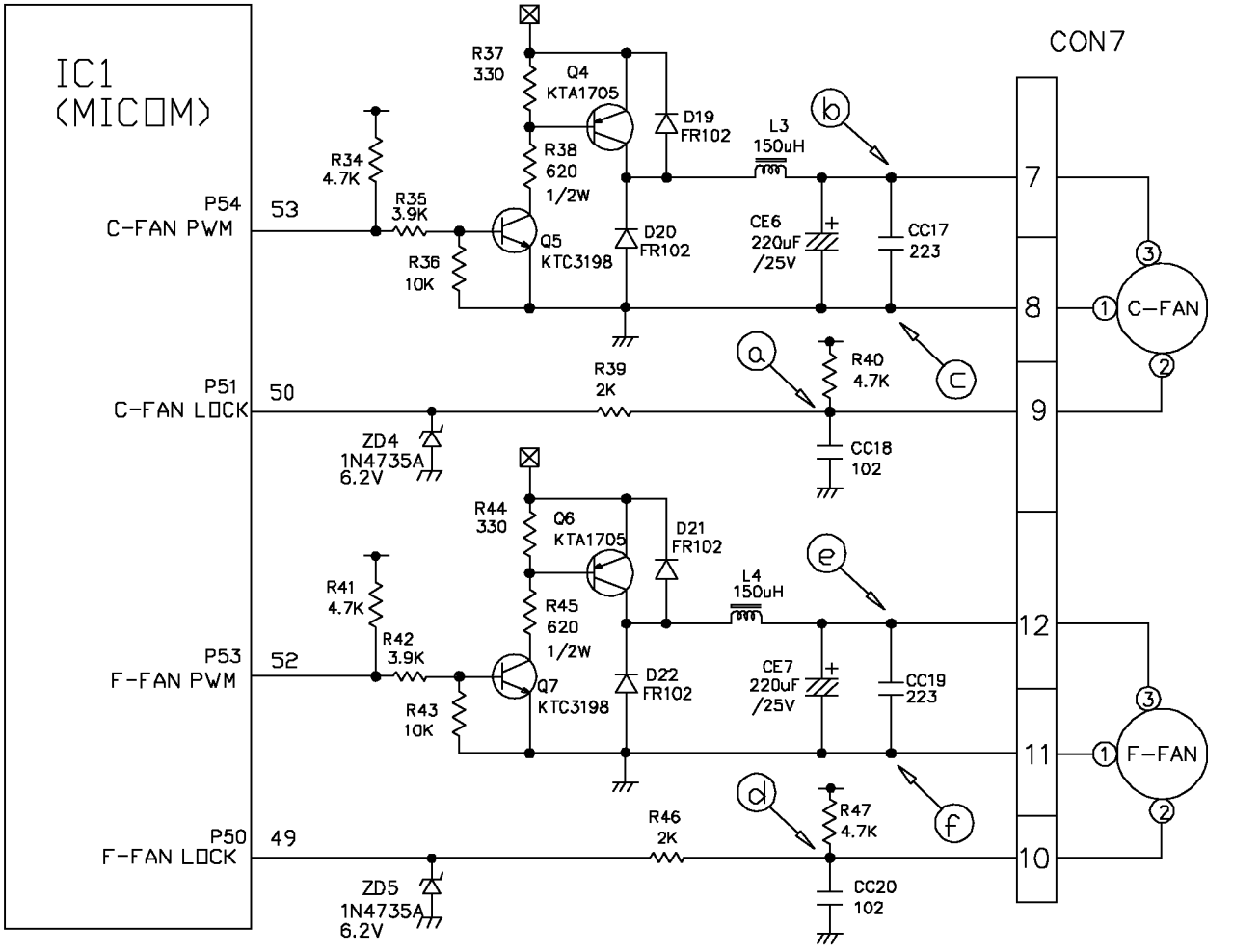

EXPLATION FOR MICOM CIRCUIT

2) GR-B197, GR-B207, GR-B247, GR-C207, GR-C247

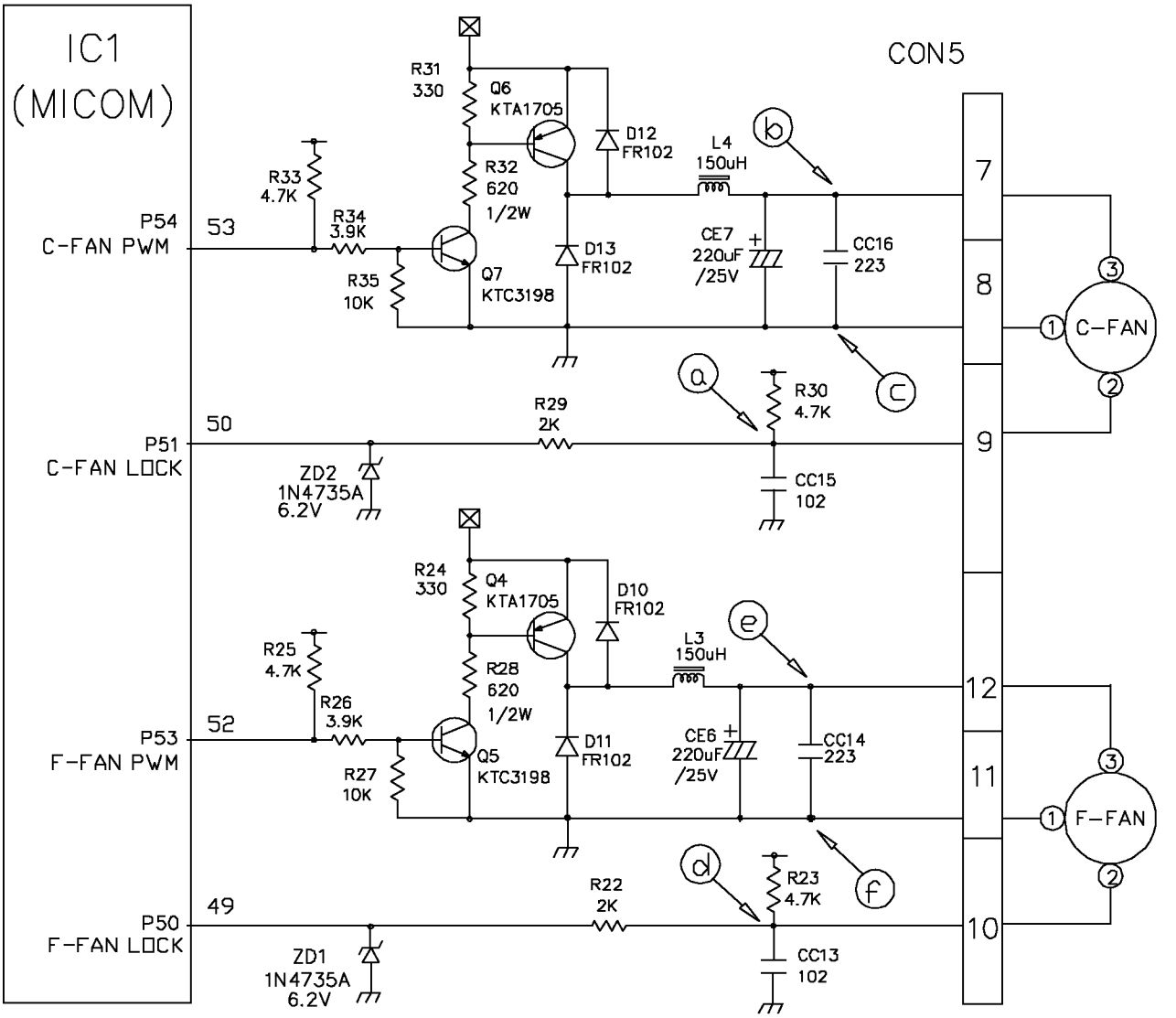

EXPLATION FOR MICOM CIRCUIT

1-10. Temperature compensation and over-cool/weak-cool compensation circuit

1. Temperature compensation at freezing room, cold storage room

1) GR-L197, GR-L207, GR-L247, GR-P207, GR-P247

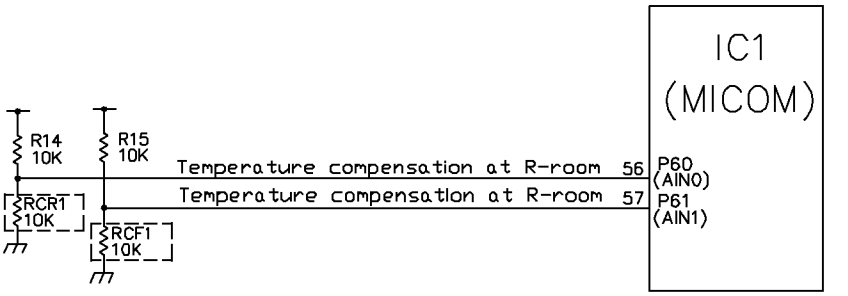

2) GR-B197, GR-B207, GR-B247, GR-C207, GR-C247

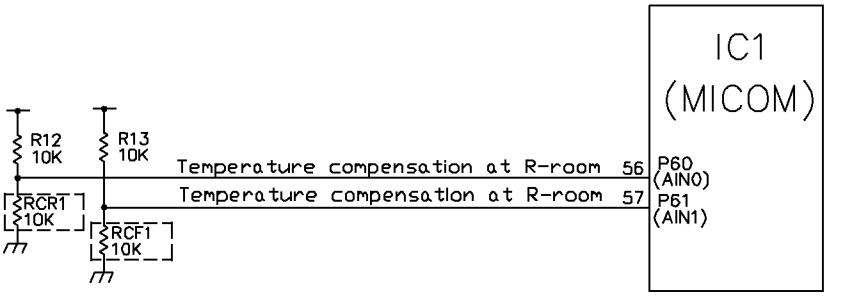

Freezing room		Cold storage room		Remarks
Resistance value (RCF1)	Temperature compensation	Resistance value (RCR1)	Temperature compensation	
180 kΩ	+5 °C	180 kΩ	+2.5 °C	Warmly compensate ↑
56 kΩ	+4 °C	56 kΩ	+2.0 °C	
33 kΩ	+3 °C	33 kΩ	+1.5 °C	
18 kΩ	+2 °C	18 kΩ	+1.0 °C	
12 kΩ	+1 °C	12 kΩ	+0.5 °C	
10 kΩ	0 °C	10 kΩ	0 °C	Reference temperature
8.2 kΩ	-1 °C	8.2 kΩ	-0.5 °C	↓ Coolly compensate
5.6 kΩ	-2 °C	5.6 kΩ	-1.0 °C	
3.3 kΩ	-3 °C	3.3 kΩ	-1.5 °C	
2 kΩ	-4 °C	2 kΩ	-2.0 °C	
470 Ω	-5 °C	470 Ω	-2.5 °C	

▶ Temperature compensation table by adjustment value (difference value against current temperature)
Ex) If changing compensation resistance at a cold storage room (RCR1) from 10 kΩ (current resistance) to 18 kΩ (modified resistance), temperature at the cold storage will increase by +1°C.

EXPLATION FOR MICOM CIRCUIT

▶ Temperature compensation table at the cold storage room is as follows:

	Modification resistance / Current resistance	470 Ω	2 kΩ	3.3 kΩ	5.6 kΩ	8.2 kΩ	10 kΩ	12 kΩ	18 kΩ	33 kΩ	56 kΩ	180 kΩ
Cold storage room (RCR1)	470Ω	No change	0.5 °C Up	1 °C Up	1.5 °C Up	2 °C Up	2.5 °C Up	3 °C Up	3.5 °C Up	4 °C Up	4.5 °C Up	5 °C Up
	2 kΩ	0.5 °C Down	No change	0.5 °C Up	1 °C Up	1.5 °C Up	2 °C Up	2.5 °C Up	3 °C Up	3.5 °C Up	4 °C Up	4.5 °C Up
	3.3 kΩ	1 °C Down	0.5 °C Down	No change	0.5 °C Up	1 °C Up	1.5 °C Up	2 °C Up	2.5 °C Up	3 °C Up	3.5 °C Up	4 °C Up
	5.6 kΩ	1.5 °C Down	1 °C Down	0.5 °C Down	No change	0.5 °C Up	1 °C Up	1.5 °C Up	2 °C Up	2.5 °C Up	3 °C Up	3.5 °C Up
	8.2 kΩ	2 °C Down	1.5 °C Down	1 °C Down	0.5 ° Drop	No change	0.5 °C Up	1 °C Up	1.5 °C Up	2 °C Up	2.5 °C Up	3 °C Up
	10 kΩ	2.5 °C Down	2 °C Down	1.5 °C Down	1 °C Down	0.5 °C Down	No change	0.5 °C Up	1 °C Up	1.5 °C Up	2 °C Up	2.5 °C Up
	12 kΩ	3 °C Down	2.5 °C Down	2 °C Down	1.5 °C Down	1 °C Down	0.5 °C Down	No change	0.5 °C Up	1 °C Up	1.5 °C Up	2 °C Up
	18 kΩ	3.5 °C Down	3 °C Down	2.5 °C Down	2 °C Down	1.5 °C Down	1 °C Down	0.5 °C Down	No change	0.5 °C Up	1 °C Up	1.5 °C Up
	33 kΩ	4 °C Down	3.5 °C Down	3 °C Down	2.5 °C Down	2 °C Down	1.5 °C Down	1 °C Down	0.5 °C Down	No change	0.5 °C Up	1 °C Up
	56 kΩ	4.5 °C Down	4 °C Down	3.5 °C Down	3 °C Down	2.5 °C Down	2 °C Down	1.5 °C Down	1 °C Down	0.5 °C Down	No change	0.5 °C Up
	180 kΩ	5 °C Down	4.5 °C Down	4 °C Down	3.5 °C Down	3 °C Down	2.5 °C Down	2 °C Down	1.5 °C Down	1 °C Down	0.5 °C Down	No change

▶ Temperature compensation at the freezing room is also performed in the same manner as cold storage room. Temperature compensation value is equivalent to two times the cold storage room.

▶ This circuit is a circuit to enter the necessary level of temperature compensation for adjusting different temperature every model at the cold storage room into MICOM.

EXPLATION FOR MICOM CIRCUIT

1-11. Key Button Input and Display Lighting Circuit

1. GR-P247, GR-P207, GR-L247, GR-L207, GR-L197

This circuit is to judge the work of function control button on the operation panel and to light each function indication led (LED module). It is driven by SCAN method.

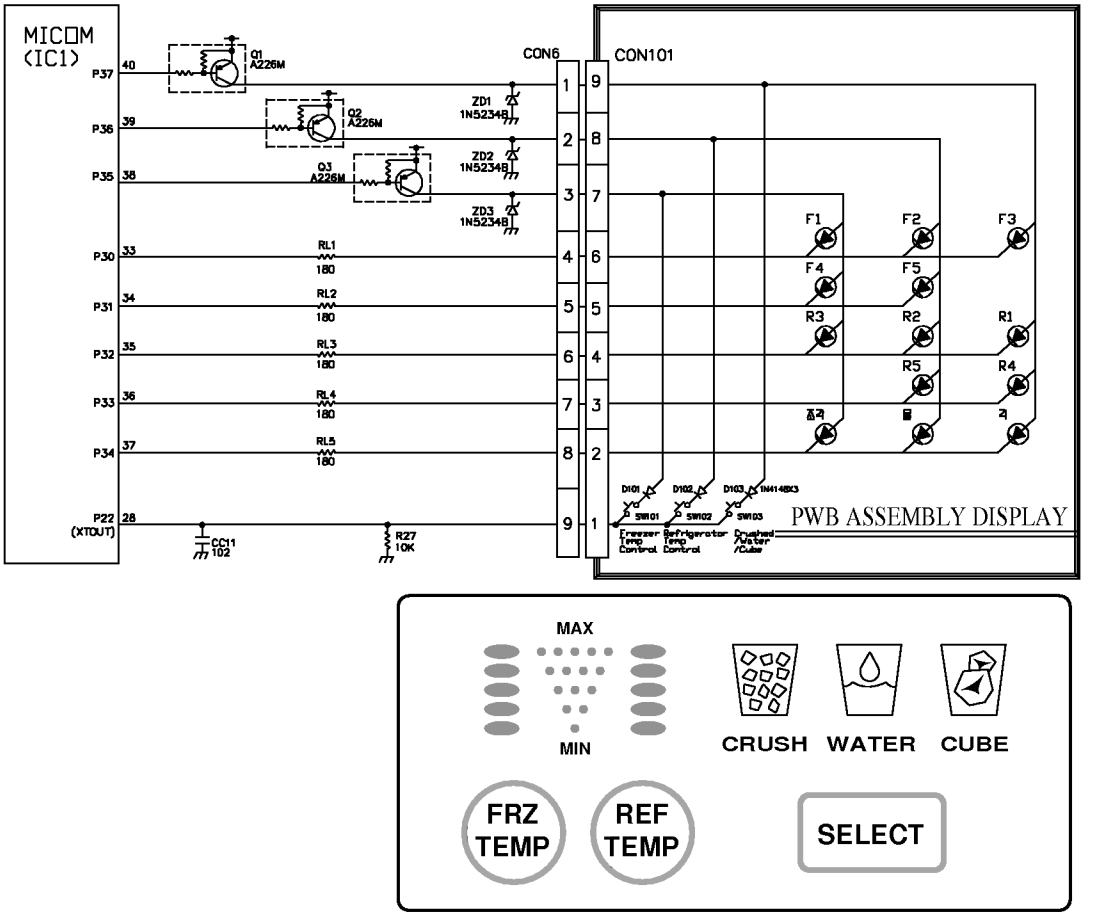

2. GR-C247, GR-C207, GR-B247, GR-B207, GR-B197

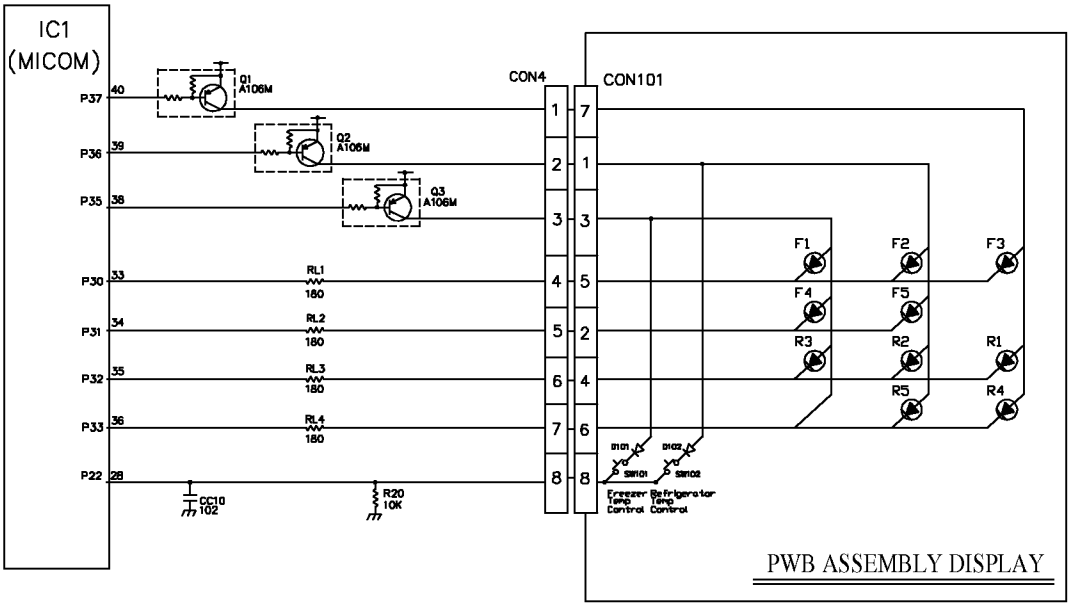

EXPLATION FOR MICOM CIRCUIT

2. Compensation circuit for weak-cold, over-cold at freezing room

1) GR-L197, GR-L207, GR-L247, GR-P207, GR-P247

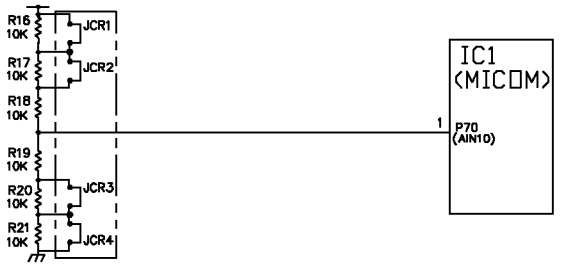

2) GR-B197, GR-B207, GR-B247, GR-C207, GR-C247

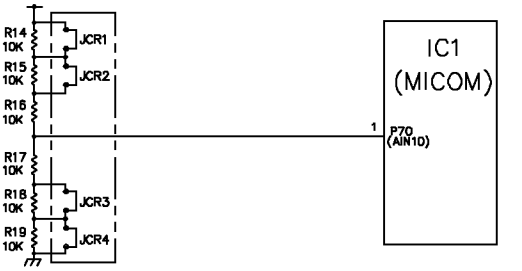

	Temperature compensation in CUT	
JCR1	+1 °C	+2 °C
JCR2	+1 °C	
JCR3	-1 °C	-2 °C
JCR4	-1 °C	

Compensation for weak-cold		Compensation for over-cold		Temperature compensation value at cold storage room	Remarks
JCR3	JCR4	JCR1	JCR2		
⌒	⌒	⌒	⌒	0 °C (In shipment from factory)	
CUT	⌒	⌒	⌒	-1 °C	
⌒	CUT	⌒	⌒	-1 °C	
⌒	⌒	CUT	⌒	+1 °C	
⌒	⌒	⌒	CUT	+1 °C	
CUT	CUT	⌒	⌒	-2 °C	
⌒	⌒	CUT	CUT	+2 °C	
CUT	⌒	CUT	⌒	0 °C	
CUT	⌒	⌒	CUT	0 °C	
⌒	CUT	CUT	⌒	0 °C	
⌒	CUT	⌒	CUT	0 °C	
CUT	CUT	CUT	⌒	-1 °C	
⌒	CUT	CUT	CUT	+1 °C	
CUT	CUT	CUT	CUT	0 °C	

▶ The above option circuit is a circuit to compensate for temperature at the cold storage room by simply cutting in service.

EXPLATION FOR MICOM CIRCUIT

3. PWB parts diagram and list

3-1. PWB Assembly main part diagram

1. GR-L197, GR-L207, GR-L247, GR-P207, GR-P247

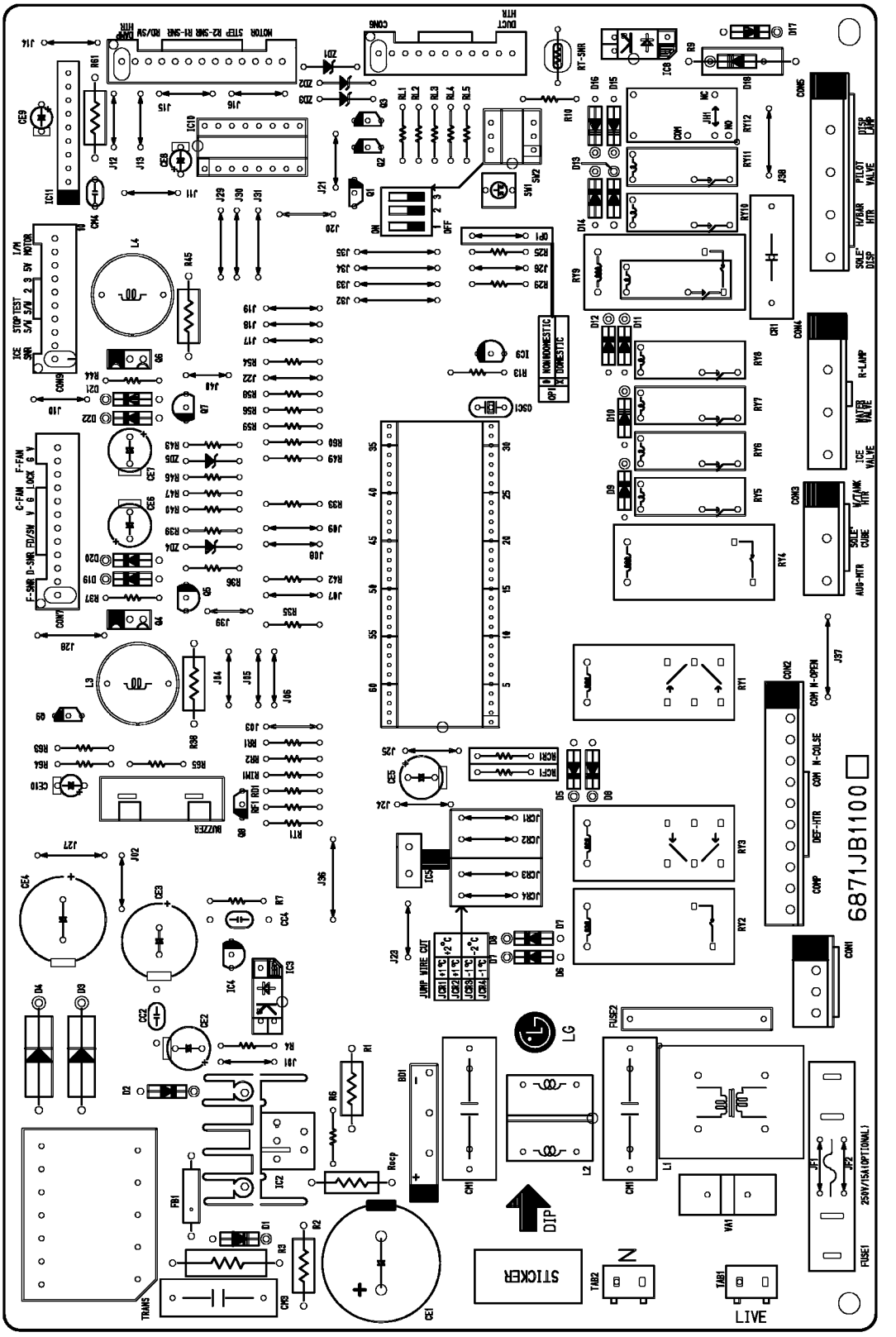

EXPLATION FOR MICOM CIRCUIT

2. GR-B197, GR-B207, GR-B247, GR-C207, GR-C247

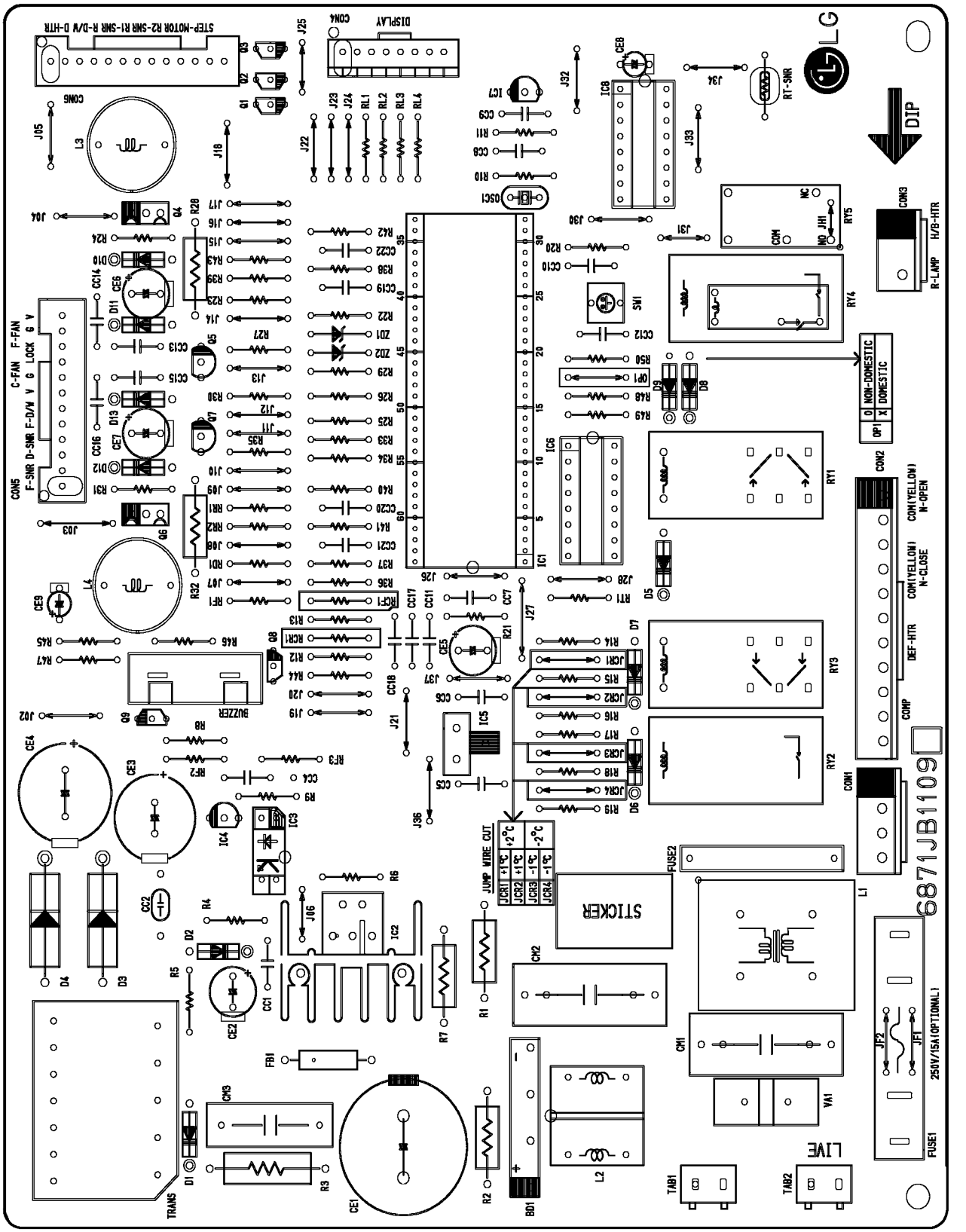

EXPLATION FOR MICOM CIRCUIT

3-2. Parts list

1. GR-L197, GR-L207, GR-L247, GR-P207, GR-P247

QTY.	NO.	DWG. NO.	DESCRIPTION	SPEC'	MAKER	REMARK
1A	1	6870JB8014	PWB,MAIN	FR-1(DS-1107A)	DOO SAN	t=1.6
1A	2	6170JB2013	TRANS,SMPS(COIL)	1,2:1.74mH	SAMIL	TRANS
1	3	6630JB8001A	WAFER	JE202-1T-02(3P-2)	JAE EUN	CON4
1	4	6630JB8001Q		JE202-1T-11		CON2
	5					
1	6	6630JB8001G		JE202-1T-04		CON1
	7					
1	8	6630JB8001Z		JE202-1T-05(5P-2,4,5,6)RED		CON5
1	9	6630JB8001D		JE202-1T-03(3P-2,4,5,6)		CON3
1	10	6630JB8007G		917786-1(6P)	AMP	CON6
1	11	6630JB8010A		917791-1(13P)		CON8
1	12	6630JB8007J		917788-1(10P)		CON9
1	13	6630JB8007L		917790-1(12P)		CON7
	14					
1	15	0IZZJB2009A	MICOM CHIP	TMP87C841N	TOSHIBA	IC1(=0IZZJB2009B)
1	16	0IKE780500Z	REGULATOR	KIA78005AP	K.E.C	IC5
1	17	0IKE704200A	RESET IC	KIA7042AP	K.E.C	IC9
2	18	0IKE650030C	DRIVE IC	KID65003AF	K.E.C	IC6,7
1	19	0IT0777400A	DRIVE IC	TA7774AP	TOSHIBA (JAPAN)	IC10
1	20	0IRH622200A	DRIVE IC	BA6222	ROHM	IC11
1	21	0ISK655100A	DRIVE IC	STR-G6551	SANKEN	IC2
1	22	0IKE431000A	V/REGULATOR	KIA431	K.E.C	IC4
1	23	0IT0721000A	PHOTO TR	TLP721F	TOSHIBA	IC3
1						IC8
2	24	6920JB2007A	RELAY	VSB-12TB	TAKAMISAWA	RY1,3
2	25	6920JB2005A		JW1aFHN	NAIS	RY2,4
1	26	6920JB2004A		DH12DI-0-C	JAEIL	RY11(R-LAMP)
		6920JB2005A		JW1aFHN	NAIS	RY11(EXPORT) (100V~127V)
		6920JB2003B		ALD112	NAIS	RY11(EXPORT) (220~240V)
1	27	6920JB2009A		G5S-1A	OMRON	RY14 (H/BAR-HTR)
6	28	6920JB2003B		ALD112	NAIS	RY5,6,7,10,12,13
1	29	6920JB2003B		ALD112	NAIS	RY8 (PILOT VALVE)
	30					
	31					
	32					
1	33	6212JB8001B	RESONATOR	CSTS4.00MG03	MURATA	OSC1 (=6212A90028)
		J570-00012B		CST4.00MGW-TF01		
1	34	6102JB8001B	VARISTOR	INR14D621	IL JIN	VA1
	35	J572-00001D		INR14D271	IL JIN	
5	36	0DR102009AA	FAST RECOVER D	FR102	DELTA	D2,D22~25
1	37	0DR107009AA		FR107		D1
2	38	0DR302000BA		FR302		D3,4
1	39	0DD400709AC	RECTIFIER DIODE	1N4007		D20
	40	0DD414809BB	SWITCHING DIODE	1N4148	(1)DELTA (2)PYUNG CHANG	D16(EXPORT) (220~240V)
		0DD400409AC	RECTIFIER DIODE	1N4004		D16(EXPORT) (100~127V)
1		0DD400409AC	RECTIFIER DIODE	1N4004		D16(R-LAMP) (NAE-SU)
4	41	0DD400409AC	RECTIFIER DIODE	1N4004		D6,7,8,9
1	42	0DB350000AA	BRIDGE DIODE	D3SBA60	SHINDENGEN	BD1
7	43	0DD414809BB	SWITCHING DIODE	1N4148	(1)ROHM (2)PYUNG CHANG	D10~12,15,17,18,21
1						D13 (PILOT VALVE)
1						RY19 (H/BAR-HTR)
2	44	0DZWR00019A	ZENER DIODE	1N4735(6.2V)	DELTA	ZD1,2

QTY.	NO.	DWG. NO.	DESCRIPTION	SPEC'	MAKER	REMARK
1	45	0CE2271F638	ELE' CAPA' (1K 85℃)	220uF/16V	RUBYCON	CE5
1	46	0CE1071H638		100uF/25V		CE9
1	47	0CE1061K638		1uF/50V		CE8
1	48	0CE687AH690	ELE' CAPA'(2K 105℃)	680uF/25V	SAM HWA	CE3
1	49	0CE2287H690		2200uF/25V		CE4
1	50	0CE107AH610	ELE' CAPA'(1K 105℃)	100uF/50V	RUBYCON	CE2
2	51	0CE227AH638		220uF/25V		CE6,7
1	52	0CE476BM640	ELE' CAPA'(1K 105℃)	47uF/450V	SAM HWA	CE1
1	53	0CQ4732Y430	MYL' CAPACITOR	473/630V	SEIL	CM3
1	54	0CQ2241N630		224/100V		CC4
1	55	0CK22102510	CER' CAPACITOR	221 /2KV	SAM HWA	CC2
1	56	0CK471DK96A		471/50V		CC1
22	57	0CK104DK9BA	CER' CAPACITOR (SMD 2012 TYPE)	104/50V		CC5~16,21~30
2	58	0CK102DK9BA		102/50V		CC18,20
2	59	0CK223DK9BA		223/50V		CC17,19
1	60	0CF33408670	FILM CAPACITOR	330nF/275VAC	PILKOR	CM1
	61					
1	62	0CF22408670		220nF/275VAC		CM2
	63					
2	64	0RS5602K600	R,OXIDE FILM	56K /2W	(1)SMART (2)DOHYANG	R3,9
1	65	0RS1503J609		150K /1W		R1
	66					
1	67	0RS010IJ609		1/1W		ROCP
	68					
1	69	0RD0682H609	R,CARBON FILM	68J 1/2W		R65
2	70	0RD6200H609		620J 1/2W		R39,46
1	71	0RD5603H609		560K 1/2W		R2
	72					
	73					
	74					
2	75	0RD3300G609		330 1/4W		R38,45
1	76	0RD6800G609		680 1/4W		R6
	77					
1	78	0RD1801G609		1.8K 1/4W		R7
	79					
7	80	0RD2001G609		2K 1/4W		R27 R34,40,47,50 R58,62
2	81	0RD3901G609		3.9K 1/4W		R36,43
10	82	0RD4701G609		4.7K 1/4W		R4,13,25,28,30 R41,48,60,63,64
5	83	0RD1002G609		10K 1/4W		R11,15,37,44,54
1	84	0RD1002G609		10K 1/4W		RCF1
1	85	0RD1002G609		10K 1/4W		RCR1
1	86	0RN1002G409	R,METAL FILM	10KF 1/4W		RT1
2	87	0RN1622G409		16.2KF 1/4W		RF1,RIM1
3	88	0RN2612G409		26.1KF 1/4W		RD1,RR1,2
	89					
1	90	0RD0332E672	CHIP RESISTOR (SMD 2012 TYPE)	33 1/8W	ROHM	R5
1	91	0RD1001E672		1K 1/8W		R8
1	92	0RD1000E672		100 1/8W		R10
11	93	0RD2001E672		2K 1/8W		R29,31~33,49,51 R52,56,57,59,61
5	94	0RD4701E672		4.7K 1/8W		R22~24,35,42
10	95	0RD1002E672		10K 1/8W		R14~21,53,55
1	96	0RD1004E672		1M 1/8W		R12
1	97	0RN2401E472		2.4KF 1/8W		RF3
1	98	0RN9101E472		9.1KF 1/8W		RF2

EXPLATION FOR MICOM CIRCUIT

QTY.	NO.	DWG. NO.	DESCRIPTION	SPEC'	MAKER	REMARK
2	99	0TRKE90004A	TRANSISTOR	KTA1705	K.E.C	Q2,4
2	100	0TR319809AC		KTC3198		Q3,5
1	101	0TR106009AF		KRC106M		Q1
1	102	6210JB8001A	CORE(CME),BEADS	BFS3510A0	SAM HWA	FB1
1	103	6600JB8001A	TEST S/W	SKHV10910	TACT	SW1
1	104	6600JB8003A	DIP S/W	3P,DIP	OTAX	SW2
5	105	4360701S	JUMP WIRE	0.6X7.5mm		J29~J34
27				0.6X10mm		J01~10,12~28
1				0.6X12.5mm		J35
		4360701S	JUMP WIRE	0.6X10mm		JF1,JF2(FUSE1)
1		4360701S	JUMP WIRE	0.6X10mm		JCR1
1						JCR2
1						JCR3
1						JCR4
		4360701S	JUMP WIRE	0.6X10mm		OP1
						OP1(EXPORT)
		4360701S	JUMP WIRE	0.6X10mm		JH1(H/B-HTR)
1	106	6200JB8001B	RC FILTER	0.1uF+120/250VAC	PILKO	CR1
1	107	4920JB3007A	HEAT SINK(STR)		TAE SUNG	
	108					
1	109	6200JB3004B	COMMON COIL	CV970020 (2mH/7A)	TNC	L1
	110					
1	111	6200JB8005A		CV910320 (32mH/1A)	TNC	L2
	112					
2	113	0LR1500K4J0	CHOKE COIL	150uH	TNC	L3,4
1	114	3J02447C	FUSE	15A/250V	SAM JU little	FUSE1
2	115	6901JB8001A	FUSE HOLDER	FC61F		
1	116	0FZZJB3001A	FUSE	2A/250V		FUSE2
	117					
2	118	0Q01030F	250 TAB	GP881191-2	K.E.T	TAB1,2
1	119	1SBF030241B	SCREW	ASS'Y TO H/SINK	TAE SUNG	
3.0g	120	49111001	SOLDER	ALMIT KR-19RMA	HISUNG DAE JIN	SOLD
25g	121	49111004	SOLDER LEAD BAR	H63A		
1.5g	122	59333105	FLUX AUTO	JS71	KOKI	

EXPLATION FOR MICOM CIRCUIT

2. GR-B197, GR-B207, GR-B247, GR-C207, GR-C247

NO.	DWG. NO.	DESCRIPTION	SPEC'	QTY.	MAKER	REMARK
1	6870JB8007	PWB,MAIN	FR-1(DS-1107A)	1A	DOO SAN	t=1.6
2	6170JB2012	TRANS,SMPS(COIL)	1,2: 2.9mH	1A	SAMIL	TRANS
3	6630JB8001A	WAFER	JE202-1T-02(3P-2)	1	JAE EUN	CON3
4	6630JB8001Q		JE202-1T-11	1		CON2
5	6630JB8001B		JE202-1T-03(3P-2,4)			
6	6630JB8001G		JE202-1T-04	1		CON1
7	6630JB8001B		JE202-1T-03(3P-2,4)			
8						
9	6630JB8001D		JE202-1T-05(3P-2,4,6,8)			
10	6630JB8007G		917786-1(6P)	1	AMP	CON4
11	6630JB8010A		917791-1(13P)	1		CON6
12	6630JB8007J		917788-1			
13	6630JB8007L		917790-1(12P)	1		CON5
14	6630JB8007K		917789-1			
15	DIZZJB2009A	MICOM CHIP	TMP87C841N	1	TOSHIBA	IC1
16	OIKE780500Z	REGULATOR	KIA78005AP	1	K.E.C	IC5
17	OIKE704200A	RESET IC	KIA7042AP	1	K.E.C	IC7
18	OIKE650030B	DRIVE IC	KID65003AP	1	K.E.C	IC6
19	OIT0777400A	DRIVE IC	TA7774AP	1	TOSHIBA (JAPAN)	IC8
20	OIRH622200A	DRIVE IC	BA6222		ROHM	
21	OISK655100A	DRIVE IC	STR-G6551	1	SANKEN	IC2
22	OIKE431000A	V/REGULATOR	KIA431	1	K.E.C	IC4
23	OIT0721000A	PHOTO TR	TLP721F	1	TOSHIBA	IC3
24	6920JB2007A	RELAY	VSB-12TB	2	TAKAMISAWA	RY1,3
25	6920JB2005A		JW1aFHN	1	NAIS	RY2
	6920JB2002A		VS-12MB		TAKAMISAWA	
26	6920JB2004A		DH12DI-0-0	1	JAEIL	RY4
	6920JB2005A		JW1aFHN		NAIS	RY4(EXPORT)
27	6920JB2009A		G5S-1A	1	OMRON	RY5(H-BAR)
28	6920JB2003B		ALD112		NAIS	
29	6920JB2003B		ALD112		NAIS	
30	6920JB2003B		ALD112		NAIS	
31						
32						
33	6212A09002B	RESONATOR	CST4.00MGW	1	MURATA	OSC1 (=6212A09002B)
	J570-00012B		CST4.00MGW-TF01			
34	6102JB8001B	VARISTOR	INR14D621	1	IL JIN	VA1
35	J572-00001D		INR14D271		IL JIN	
36	ODR102009AA	FAST RECOVER D	FR102	5	DELTA	D2,D10~13
37	ODR104009AA		FR104			
38	ODR107009AA		FR107	1		D1
39	ODR302000BA		FR302	2		D3,4
40	ODD414809BB	SWITCHING DIODE	1N4148	1	ROHM	D9(H-BAR)
	ODD400409AC	RECTIFIER DIODE	1N4004		(1)DELTA (2)PYUNG CHANG	
41	ODD400409AC	RECTIFIER DIODE	1N4004	4		D5~8
42	ODB360000AA	BRIDGE DIODE	D3SBA60	1	SHINDENGEN	BD1
43	ODD414809BB	SWITCHING DIODE	1N4148		(1)ROHM (2)PYUNG CHANG	
44	ODZMR00019A	ZENER DIODE	1N4735(6.2V)	2	DELTA	ZD1,2

NO.	DWG. NO.	DESCRIPTION	SPEC'	QTY.	MAKER	REMARK
45	OCE2271F638	ELE' CAPA' (1K 85℃)	220uF/16V	1	RUBYCON	CE5
46	OCE4761H638		47uF/25V	1		CE8
47	OCE476AK638		47uF/50V			
48	OCE687AH690	ELE' CAPA(RX 105℃)	680uF/25V	1	SAM HWA	CE3
49	OCE2287H690		2200uF/25V	1		CE4
50	OCE107AK610		100uF/50V	1		CE2
51	OCE227AH638	ELE' CAPA(RG 105℃)	220uF/25V	2	RUBYCON	CE6,7
52	OCE476BV640	ELE' CAPA(HE 105℃)	47uF/450V	1	SAM HWA	CE1
53	OCQ4732Y430	MYL' CAPACITOR	473/630V	1	SEIL	CM3
54	OCQ2241N630		224/100V	1	SEIL	CC4
55	OCK1020K519	CER' CAPACITOR	102/50V	3	TAE YANG	CC10,13,15
56	OCK1040K919		104/50V			CC5~9 CC11,12 CC17~22
57	OCK2230K949		223/50V	2		CC14,16
58	OCK4710K519		471/50V	1	SAM HWA	CC1
59	OCK2241N630		224/100V	1		
60	OCK22102510		221 /2KV	1		CC2
61						
62						
63	OCF33408670		330nF/275VAC	1	PILKOR	CM1
64	OCF22408670		220nF/275VAC	1		CM2
65	ORS2701K600	R,OXIDE FILM	2.7K /2W		(1)SMART (2)CHOHYANG	
66	ORS4702K600		47K/2W			
67	ORS5602K600		56K /2W	1		R3
68	ORS0151J609		1.5 /1W			
69	ORS8202J609		82K /1W			
70	ORS1503J609		150K /1W	1		R1
71	ORS0101J609		1/1W	1		R7
72	ORD0682H609	R,CARBON FILM	68J 1/2W			
73	ORD6200H609		620J 1/2W	2		R28,32
74	ORD5603H609		560K 1/2W	1		R2
75	ORD2200G609		220 1/4W	1		R45
76	ORD0332G609		33 1/4W	1		R5
77	ORD1000G609		100 1/4W			
78	ORD1800G609		180J 1/4W	4		RL1~RL4
79	ORD3300G609		330 1/4W	2		R24,31
80	ORD6800G609		680 1/4W	1		R6
81	ORD1001G609		1K 1/4W	3		R9,46,47
82	ORD1801G609		1.8K 1/4W	1		R8
83	ORD2401G609		2.4K 1/4W			
84	ORD2001G609		2K 1/4W	11		R21,22,29 R36~43
85	ORD3901G609		3.9K 1/4W	2		R26,34
86	ORD4701G609		4.7K 1/4W	10		R4,11,23,25,30 R33,44,48~50
87	ORD1002G609		10K 1/4W	11		R12~20,27,35
88	ORD1002G609		10K 1/4W	1		RCF1
89	ORD1002G609		10K 1/4W	1		RCR1
90	ORD1004G609		1M 1/4W	1		R10
91	ORN2401G409	R,METAL FILM	2.4KF 1/4W	1		RF3
92	ORN9101G409		9.1KF 1/4W	1		RF2
93	ORN1002G409		10KF 1/4W	1		RT1
94	ORN1622G409		16.2KF 1/4W	1		RF1
95	ORN2612G409		26.1KF 1/4W	3		RD1,RR1,2
96	ORM1201N661		12K 5W			RS1(DAMPER) (J30)
	ORS2701K600		2.7K 2W			
			JUMP WIRE			
97	OTRKE90004A	TRANSISTOR	KTA1705	2	K.E.C	Q4,6
98	OTR319809CA		KTC3198	2		Q5,7
	OTR127309AD		KTA1273			

EXPLATION FOR MICOM CIRCUIT

NO.	DWG. NO.	DESCRIPTION	SPEC'	QTY.	MAKER	REMARK
99	0TR106009AC	TRANSISTOR	KRA106M	4	K.E.C	Q1~3,Q8
100	0TR106009AF		KRC106M	1		Q9
101	6908JB3002A	BUZZER,PIGZO CE	BM-20K	1	BUJEON	BUZZER
102	6210JB8001A	CORE(CIRE),BEADS	BFS3510A0	1	SAM HWA	FB1
103	6600JB8001A	TEST S/W	SKHV10910	1	TACT	SW1
104	6600JB8003A	금수용S/W	3P,DIP		OTAX	
105	43607015	JUMP WIRE	0.6X7.5mm	4		J06,25,29,31
			0.6X10mm	28		02,04,05,J07~J24 J26,28,32~34,36,37
						JF1,JF2(FUSE1)
						FUSE2
				1		JCR1
				1		JCR2
				1		JCR3
				1		JCR4
						OP1
						OP2
			0.6X12.5mm	2		J03,27
106	6200JB8001A	RC FILTER	0.1uF+120/250VAC		PILKO	CR1
107	4920JB3007A	HEAT SINK(STR)		1	TAE SUNG	
108	4920JB3001A	HEAT SINK(5V)	(=J572-00002A)		TAE SUNG	
109	6200JB8004A	COMMON COIL	CV940050 (5mH/4A)	1	TNC	L1
110						
111	6200JB3007A		CV410150 (15mH/1A)	1	TNC	L2
112						
113	0LR1500K4J0	CHOKE COIL	150uH	2	TNC	L3,4
114	3J02447C	FUSE	15A/250V	1	SAM JU	FUSE1
115	6901JB8001A	FUSE HOLDER	FC61F	2		
116	0FZZJB3001A	FUSE	2A/250V	1		FUSE2
117						
118	0Q01030F	250 TAB	GP881191-2	2	K.E.T	TAB1,2
119	1SBF0302418	SCREW	ASS'Y TO H/SINK	1	TAE SUNG	
120	49111001	SOLDER	ALMIT KR-19RMA	3.0g	HISUNG DAE JIN	SOLD
121	49111004	SOLDER LEAD BAR	H63A	25g		
122	59333105	FLUX AUTO	JS71	1.5g	KOKI	
123	6500JB3001A	SENSOR	PBN-43	1	JAMES TEC	RT-SNR

EXPLATION FOR MICOM CIRCUIT

4. PWB circuit diagram - PWB circuit diagram may vary a little bit depending on actual condition.

1. GR-L197, GR-L207, GR-L247, GR-P207, GR-P247

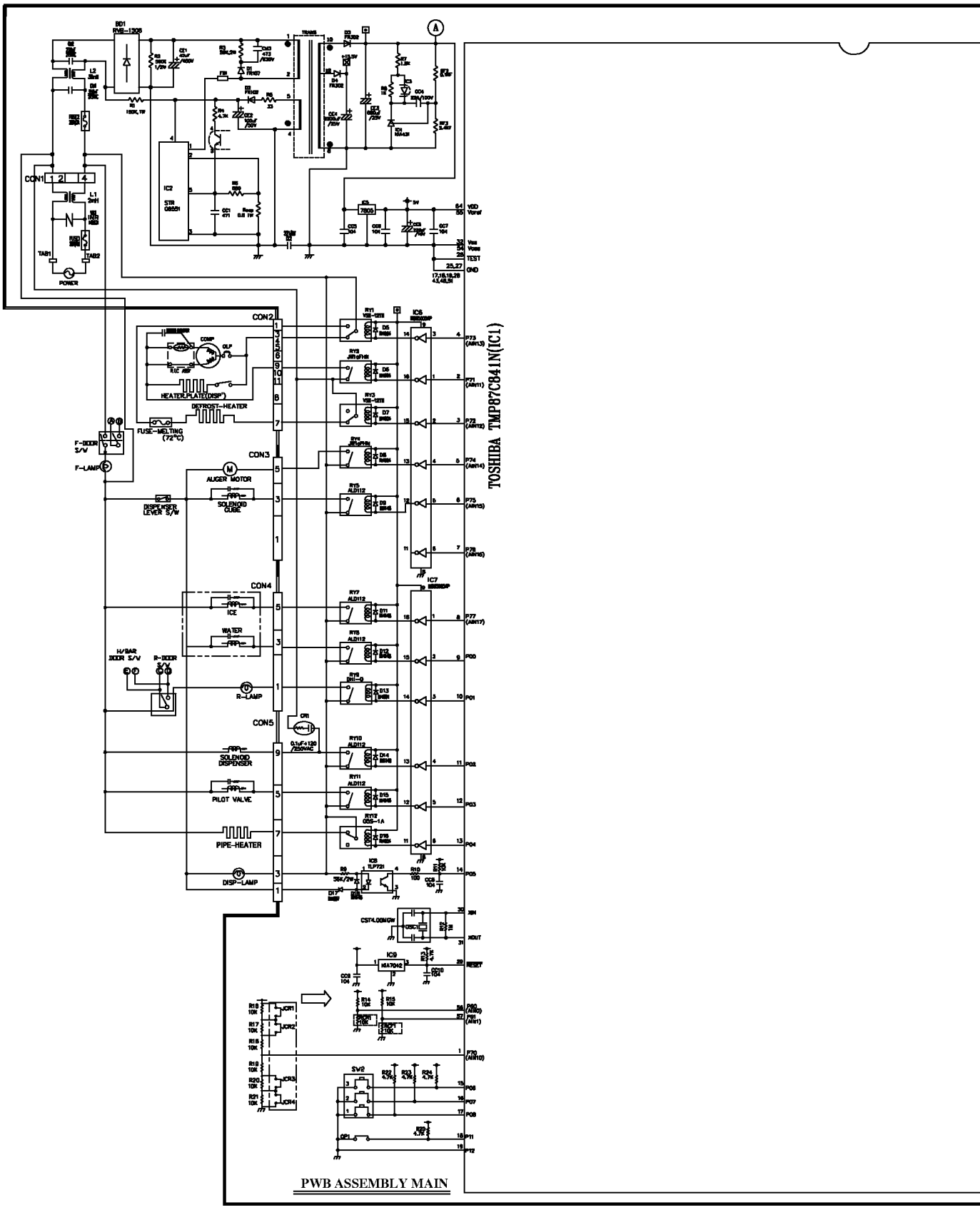

EXPLATION FOR MICOM CIRCUIT

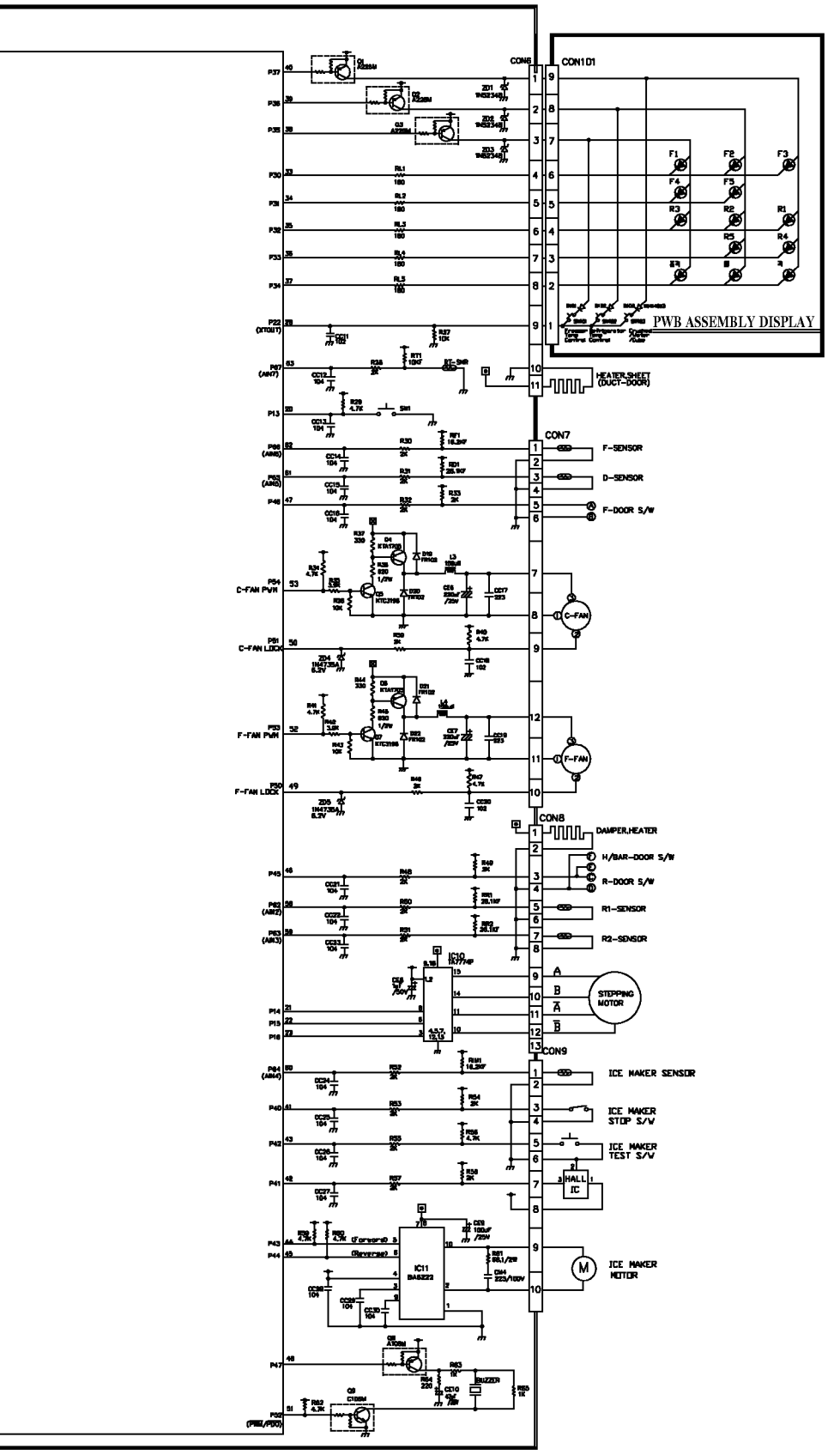

EXPLATION FOR MICOM CIRCUIT

2. GR-B197, GR-B207, GR-B247, GR-C207, GR-C247

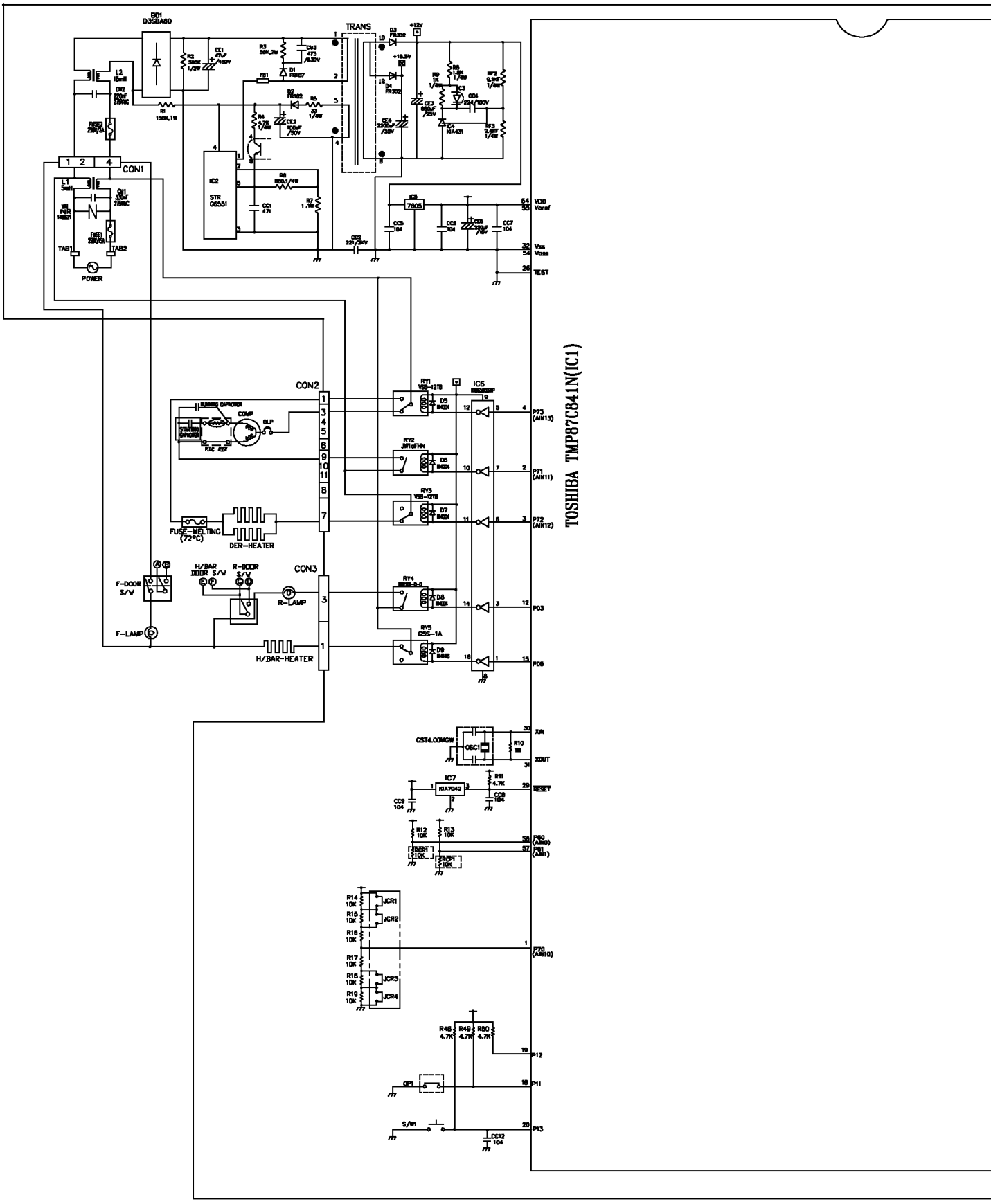

EXPLATION FOR MICOM CIRCUIT

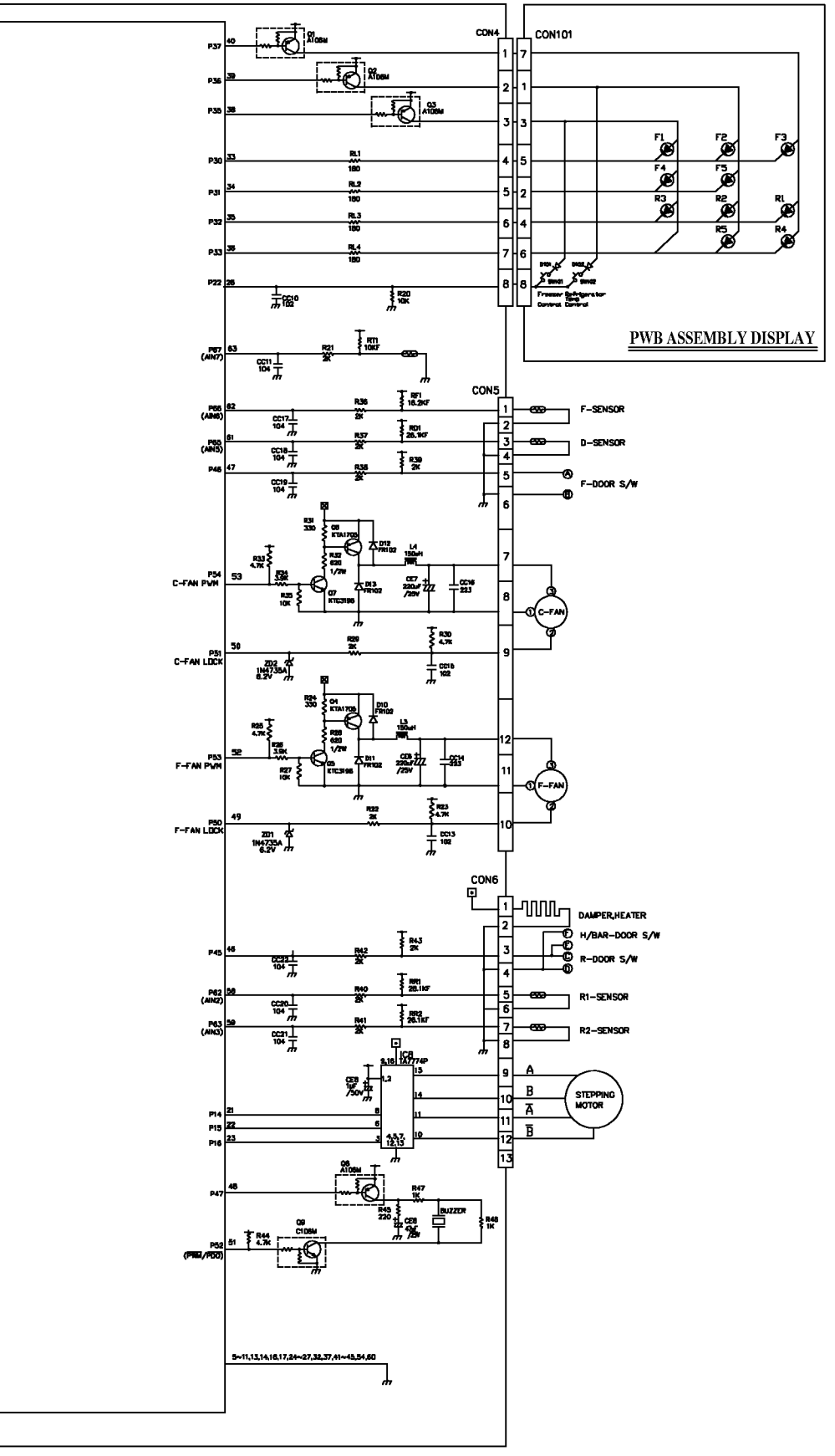

ICE MAKER AND DISPENSER OPERATION PRINCIPLE AND REPAIR METHOD

1. Working Principles

1-1. Ice Maker Working Principles

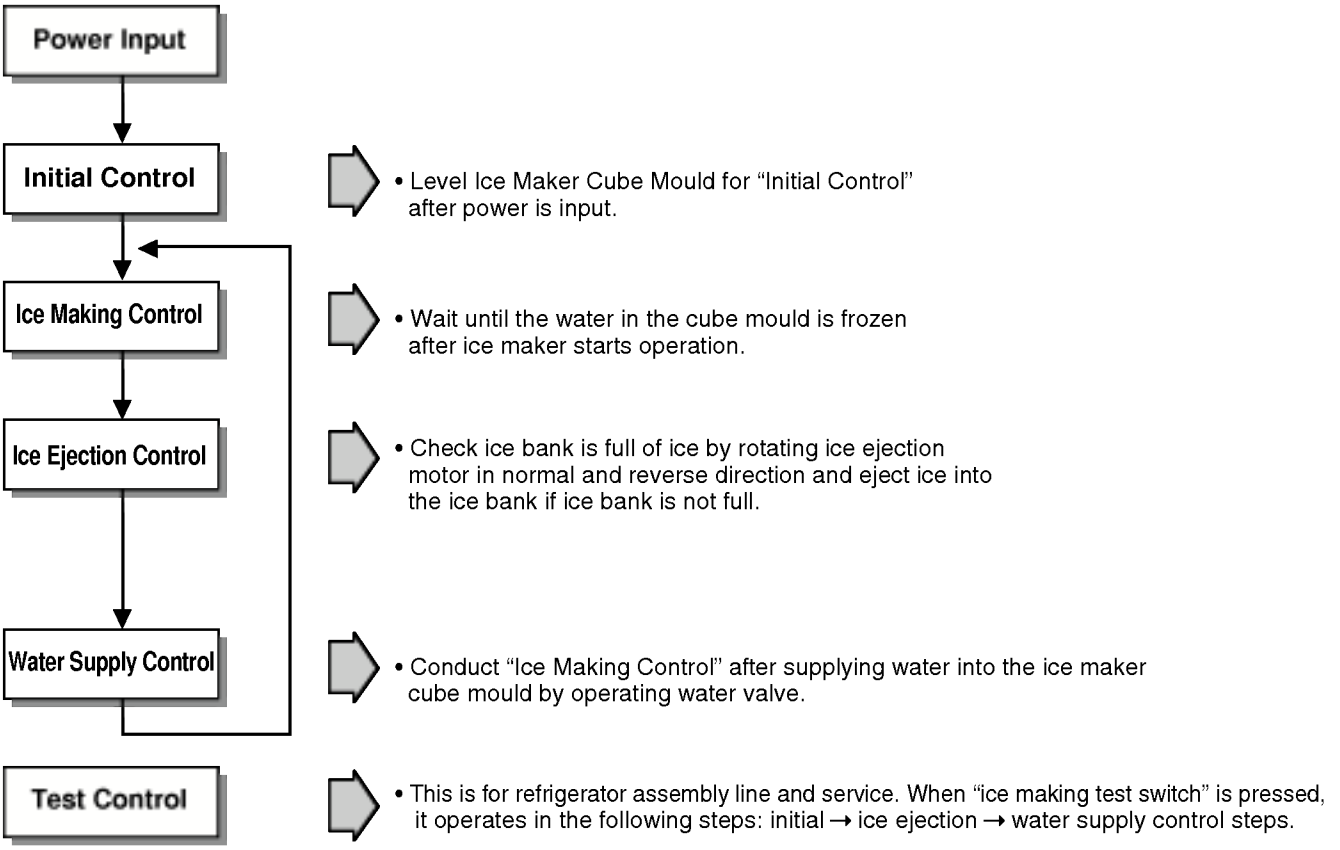

1-2. Dispenser Working Principles

1. This function is available in Model GR-P247, GR-P207 and GR-L247, GR-L207, GR-L197 where water and ice are available without opening freezer compartment door.
2. "Crushed Ice" is automatically selected when power is initially applied or reapplied after power cut.
3. When dispenser selection switch is continuously pressed, light is on in the following sequence: "Water" → "Cube Ice" → "Crushed Ice".
4. Lamp is on when dispenser rubber button is pressed and vice versa.
5. When dispenser crushed ice rubber button is pressed, dispenser solenoid and geared motor work so that crushed ice can be dispensed if there is ice in the ice bank.
6. When dispenser cube ice rubber button is pressed, dispenser solenoid, cube ice solenoid and geared motor work so that cube ice can be dispensed if there is ice in the ice bank.
7. When dispenser water rubber button is pressed, water valve opens and water is supplied if water valve is normally installed on the right side of the machine room.
8. Ice and water are not available when freezer door is open.

2. Function of Ice Maker

2-1. Initial Control Function

1. When power is initially applied or reapplied after power cut, it detects level of ice maker cube mould after completion of MICOM initialization. The detecting lever moves up and down.
2. The level of ice maker cube mould is judged by output signal, high and low signal, of Hall IC. Make the cube mould to be horizontal by rotating ice ejection motor in normal or reverse direction so that High/Low signal can be applied to MICOM Pin No. 44.
3. If there is no change in signals one minute after the geared motor starts to operate, it stops icemaker operation and check the signal every hour. It resets initialization of icemaker when it becomes normal.
4. It judges that the initial control is completed when it judges the ice maker cube mould is horizontal.
5. Ice ejection conducts for 1 cycle irrespect of ice in the ice bank when power is initially applied.

2-2. Water Supply Control Function

1. This is to supply water into the ice maker cube mould by operating water valve in the machine room when ice ejection control is completed and ice maker mould is even.
2. The quantity of water supplied is determined by DIP switch and time.

<Water Supply Quantity Table>

No	DIP SWITCH SETTING			WATER SUPPLY TIME	REMARKS
	S/W 1	S/W 2	S/W 3		
1	OFF	OFF	OFF	6.5 Sec.	* The quantity of water supplied depends on DIP switch setting conditions and water pressure as it is a direct tap water connection type. (the water supplied is generally 80 cc to 120 cc) * DIP switch is on the main PWB.
2	ON	OFF	OFF	5.5 Sec.	
3	OFF	ON	OFF	6 Sec.	
4	ON	ON	OFF	7 Sec.	
5	OFF	OFF	ON	7.5 Sec.	
6	ON	OFF	ON	8 Sec.	
7	OFF	ON	ON	9 Sec.	
8	ON	ON	ON	10 Sec.	

3. If water supply quantity setting is changed while power is on, water supplies for the amended time. If DIP switch is changed during water supply, water shall be supplied for the previous setting time. But it will supply for the amended time from the next supply.
4. When water supply signal is applied to water and ice valves at the same time during water supply, water shall be supplied to water valve. If water supply signal is applied to ice valve during water supply, water shall be supplied to both water and ice valves.

2-3. Ice Making Control Function

1. Ice making control is carried out from the completion of water supply to the completion of ice making in the cube mould. Ice making sensor detects the temperature of cube mould and completes ice making. (ice making sensor is fixed below ice maker cube mould)
2. Ice making control starts after completion of water supply control or initial control.
3. It is judged that ice making is completed when ice making sensor temperature reaches at -8°C after 100 minutes when water is supplied to ice maker cube mould.
4. It is judged that ice making is completed when ice maker sensor temperature reaches below -12 °C after 20 minutes in condition 3.

2-4. Ice Ejection Control Function

1. This is to eject ice from ice maker cube mould after ice making is completed.
2. If Hall IC signal is on within 3.6 seconds after ice ejection motor rotates in normal direction, it does not proceed ice ejection but waits. If the ice bank is full, ice ejection motor rotates in normal direction in every hour to check the condition of ice bank. If the ice bank is not full, the water supply control starts after completion of ice ejection control. If the ice bank is full, ice ejection motor rotates in reverse direction and sops under ice making or waiting conditions.
3. If ice bank is not full, ice ejection starts. The cube mould tilts to the maximum and ice is separated from the mould and ice checking lever raises.
4. Ice ejection motor stops for 1 second if Hall IC signal changes from OFF (low) to ON (high) after 3.6 seconds when ice ejection motor rotates in normal direction. If there is no change in Hall IC signals within 1 minute after ice ejection motor operates, ice ejection motor stops as ice ejection motor or hall IC is out of order.
5. If ice ejection motor or Hall IC is abnormal, ice ejection motor rotates in normal direction to exercise initial operation. It resets the ice maker if ice ejection motor or Hall IC is normal.
6. The mould stops for 1 second at maximum tilted conditions.
7. The mould returns to horizontal conditions as ice ejection motor rotates in reverse direction.
8. When the mould becomes horizontal, the cycle starts to repeat:
   Water Supply → Ice Making → Ice Ejection → Mould Returns to Horizontal

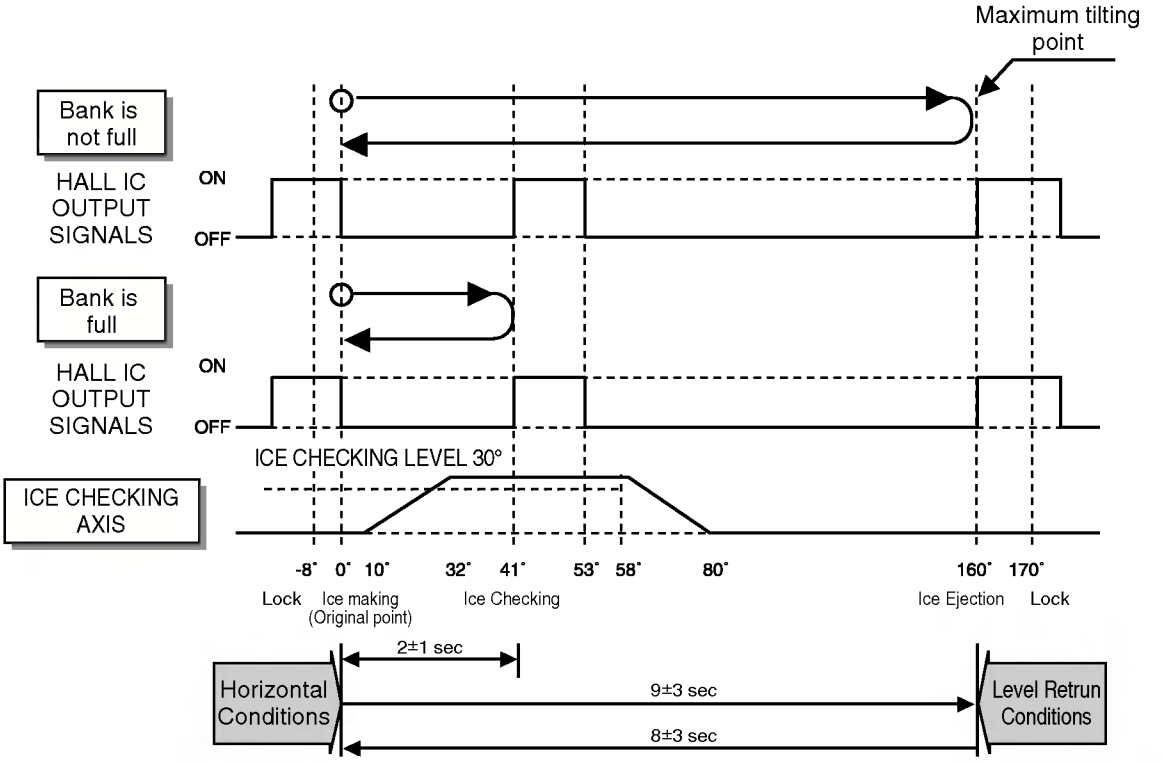

<Timing Chart During Ice Ejection>

2-5 Test Function

1. It is to force the operation during operation test, service, and cleaning. The test switch is mounted under the automatic ice maker. The test function starts when the test switch is pressed for more than 0.5 second.
2. Test button does not work during ice ejection and water supply. It works when it is in the horizontal conditions. If mould is full of ice during test function operation, ice ejection control and water supply control do not work.
3. When test switch is pressed for more than 0.5 second in the horizontal conditions, ice ejection starts irrespect of the mould conditions. Water shall be splashed if test switch is pressed before the water in the mould freezes. Water shall be supplied while the mould returns to the horizontal conditions after ice ejection. Therefore the problems of ice ejection, returning to the horizontal conditions, and water supply can be checked by test switch. When test function performs normally, buzzer sounds and water supply shall carry out. Check it for repair if buzzer does not sound.
4. When water supply is completed, the cycle operates normally as follows: Ice making → Ice ejection → Returning to horizontal conditions → Water supply
5. Remove ice from the ice maker cube mould and press test switch when ice maker cube mould is full of ice as ice ejection and water supply control do not work when cube mould is full of ice.

2-6. Other functions relating to freezer compartment door opening

1. When freezer door is open, ice dispenser stops in order to reduce noise and ice drop.
2. When freezer door is open during ice ejection and cube mould returning to horizontal condition, ice ejection and cube mould level return proceed.
3. When freezer door is open, geared motor and cube ice solenoid immediately stop and duct door solenoid stops after 5 seconds.
4. Water dispenser stops in order to protect water drop when freezer door is open.
5. Test function operates normally irrespect of refrigearator compartment door opening.

3. Ice Maker Troubleshooting

*** Troubleshooting:** it is possible to confirm by pressing freezer and refrigerator temperature control buttons for more than 1 second. (ice maker is normal if all leds are on): refer to trouble diagnposis function in MICOM function 2-8 (page 18)

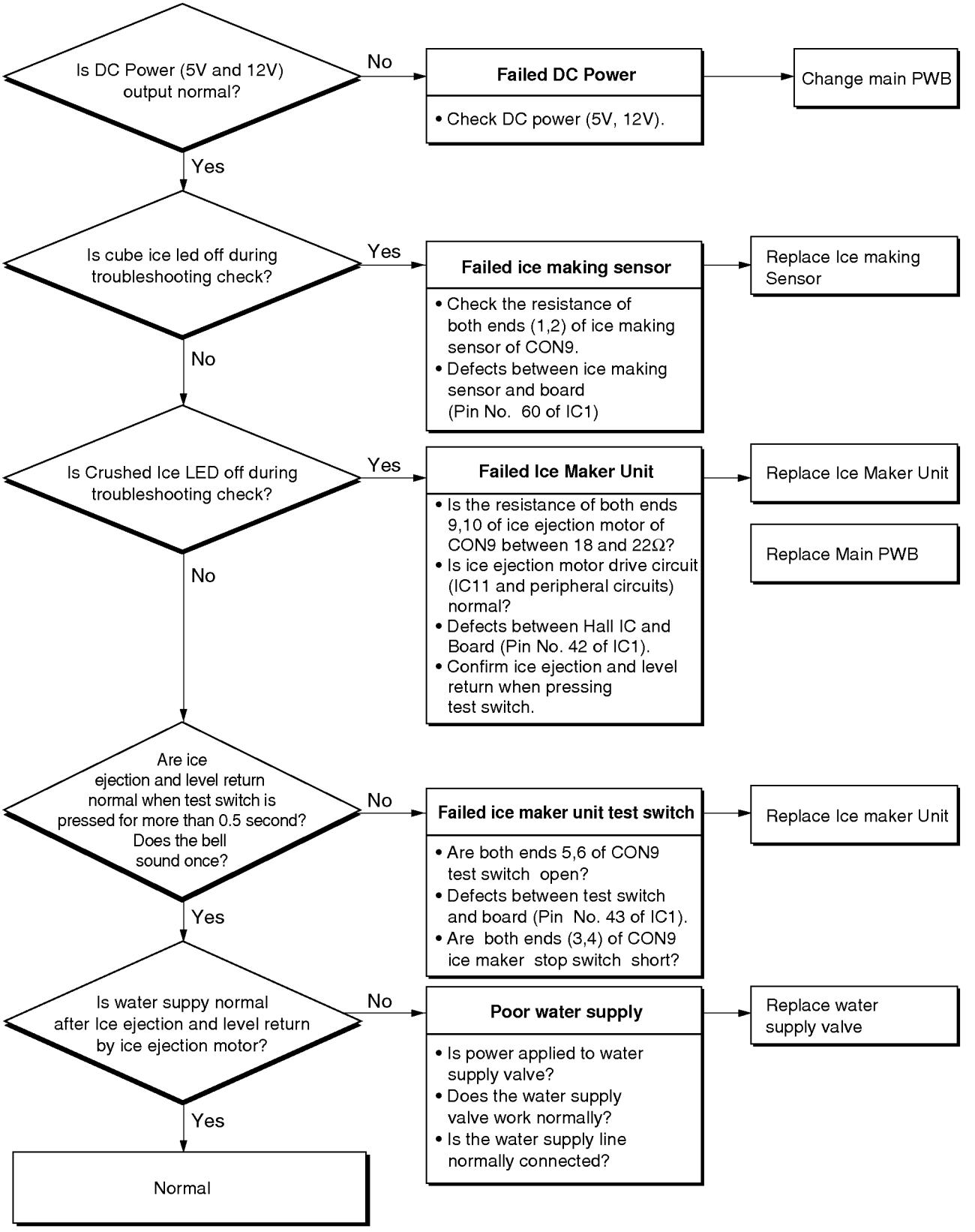

4. Ice maker circuit part

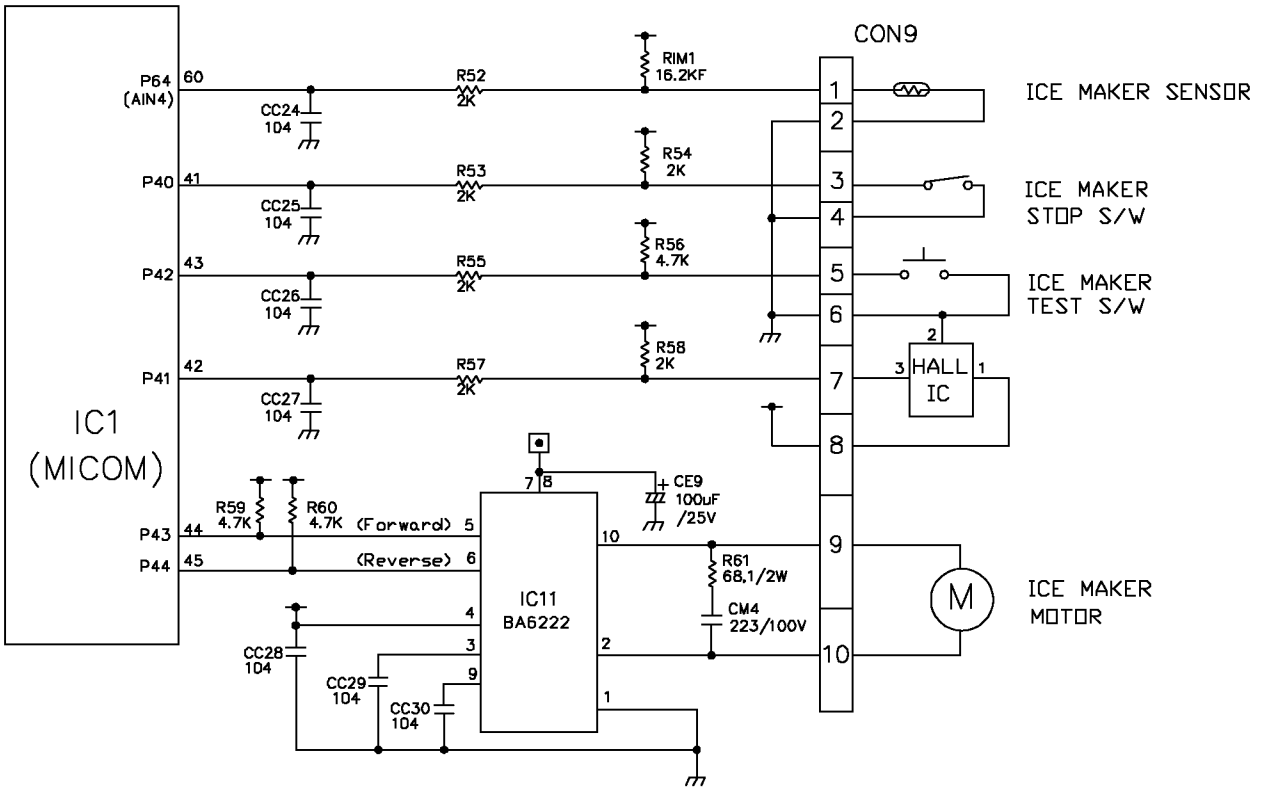

The above ice maker circuit is applied to the R S65DQG/DSG, R-S65DRG and consists of the ice maker unit part installed at the freezing room and the ice maker driving part of the main PWB.

Water supply to the ice maker container is done by opening the valve for the established water supply time by operating the container via a solenoid relay for the ice valve of the solenoid valve placed at the M/C room. If the water supply time is elapsed, water supply is automatically stop. This circuit is a circuit for implementing function such as ice removal, ice-full detection, horizontal balancing and sense of ice-making temperature for the ice-maker container. Since ice-making temperature sense is same as in the temperature sense circuit part of the main PWB, refer to it.

Test switch input detection of the ice-maker is same as in the door switch input detection circuit of the main PWB.

1. This function is used in operation test, service execution and cleaning etc and performed if pressing the test switch installed at the automatic ice-maker itself for more than 0.5 second.
2. The test switch operates in the horizontal status and test function is not input in the water supply operation. Ice removal control and water supply control is not performed if full-ice is arrived during the operation of test function.
3. If pressing the test switch for 0.5 second or more in the horizontal status, ice removal operation is immediately performed irrespective of the generation conditions of ice at the ice-making tray. Therefore, care is required since water may overflow if operating test function in the water state that ice-making is not done. A cycle of water supply is performed in the horizontal balancing operation after ice removal operation. Therefore, you can check any problem of ice removal operation, horizontal operation and water supply. In this case, if test function is normally performed, “Ding~” buzzer sound rings and water supply control is performed. Thus, no ringing of “Ding~” buzzer sound means failure and repair check must be performed.
4. If water supply is completed, operation in the normal cycle of “ice making → ice removal → returning to horizontal status → water supply”.

CIRCUIT DIAGRAM

BASIC

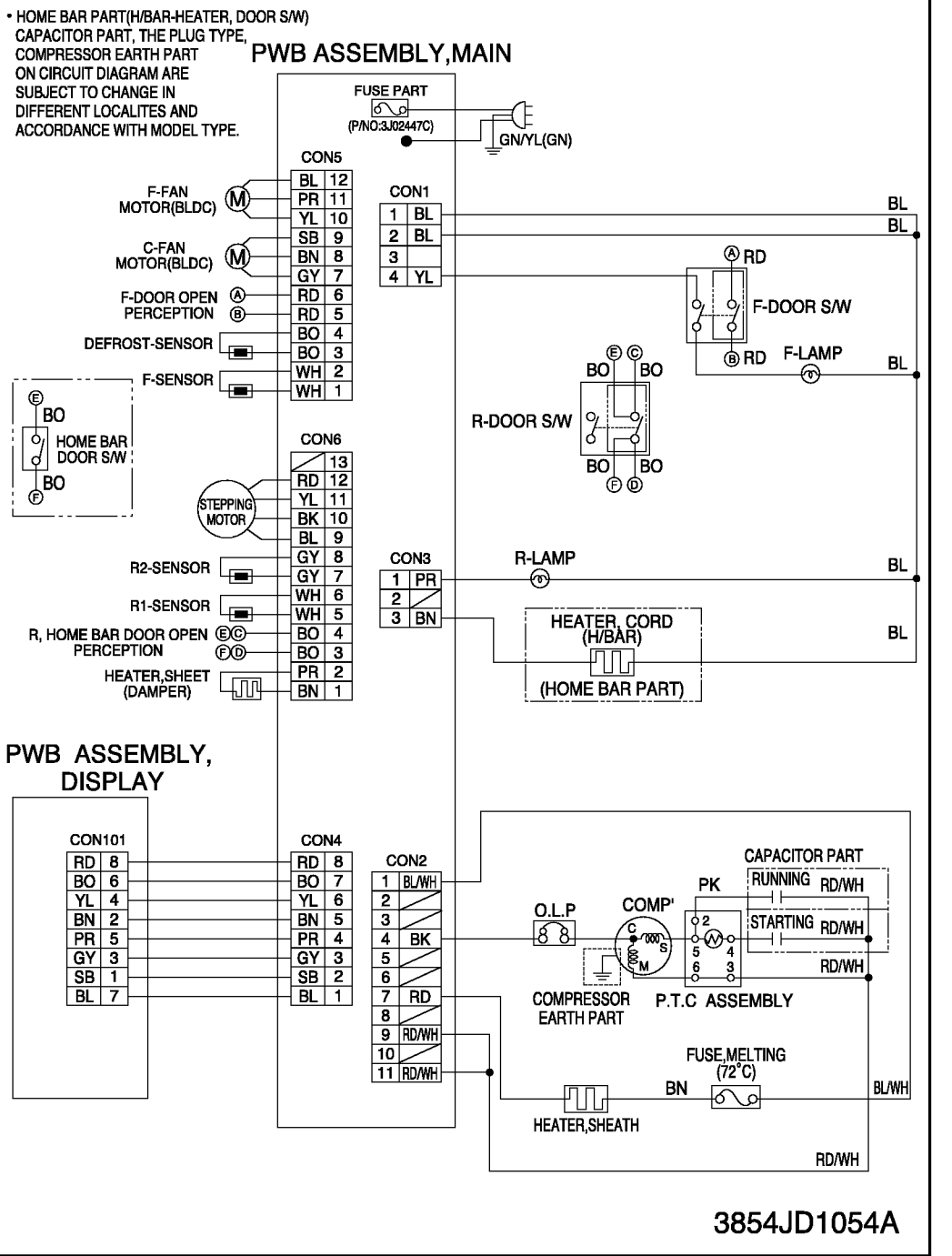

BK : BLACK	BN : BROWN	BO : BRIGHT ORANGE	GY : GRAY
YL : YELLOW	GN : GREEN	PR : PURPLE	WH : WHITE
SB : SKY BLUE	PK : PINK	GN/YL : GREEN/YELLOW	BL/WH : BLUE/WHITE
WH/BK : WHITE/BLACK	WH/RD : WHITE/RED	RD/WH : RED/WHITE	

CIRCUIT DIAGRAM

DELUXE

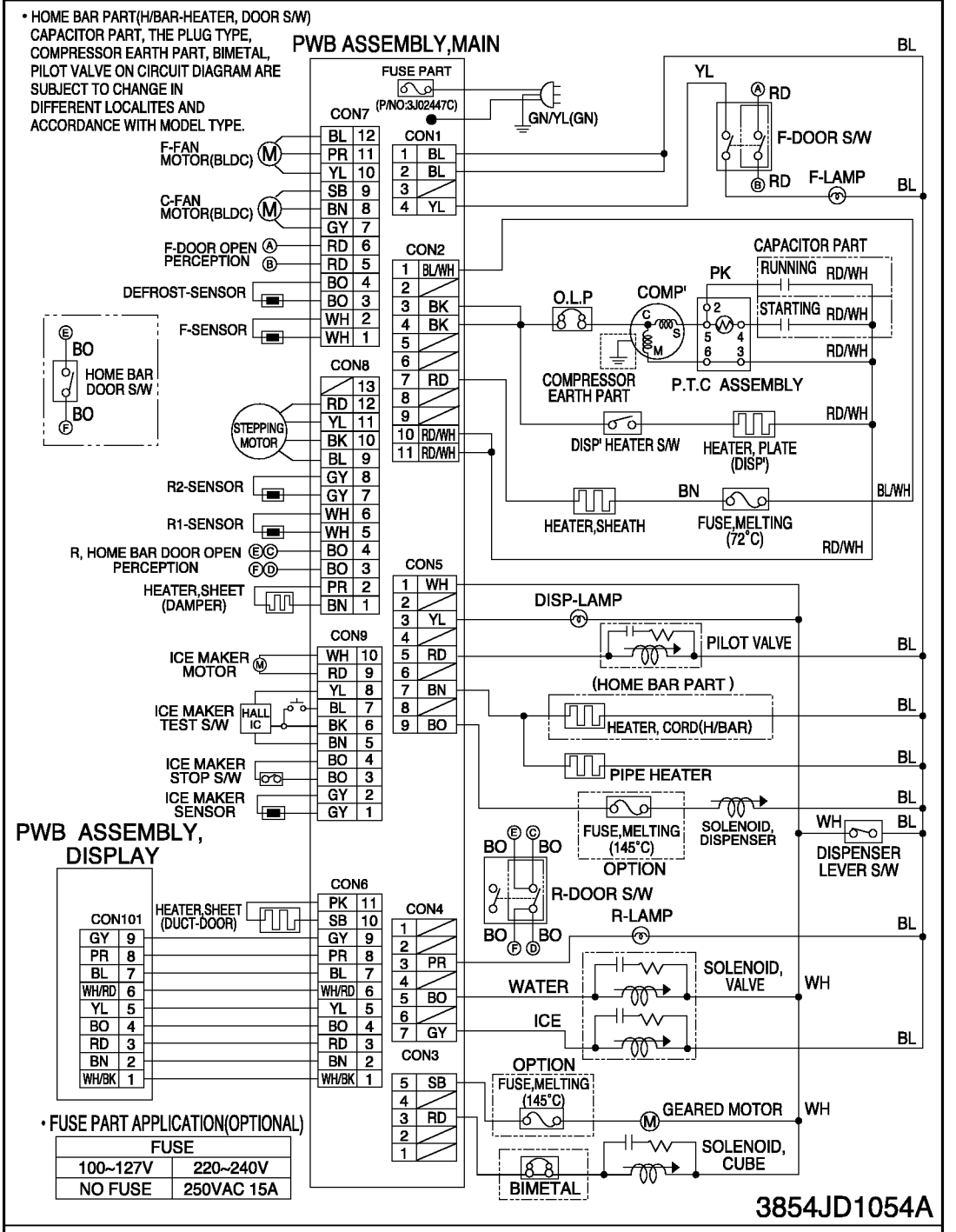

TROUBLE DIAGNOSIS

1. Trouble Shooting

CLAIMS.	CAUSES AND CHECK POINTS.	HOW TO CHECK

1. Faulty start	1) No power on outlet.
	2) No power on cord.
	- Bad connection between adapter and outlet. (faulty adapter)
	  - The Inner diameter of adapter.
	  - The distance between holes.
	  - The distance between terminals.
	  - The thickness of terminal.
	- Bad connection between plug and adapter (faulty plug).
	  - The distance between pins.
	  - Pin outer diameter.
	3) Shorted start circuit.
	- No power on power cord.
	  - Disconnected copper wire.
	  - Power cord is disconnected.
	  - Faulty soldering.
	  - Internal electrical short.
	  - Faulty terminal contact.
	  - Loose contact.
	  - Large distance between male terminal.
	  - Thin female terminal.
	  - Terminal disconnected.
	  - Bad sleeve assembly.
	  - Disconnected.
	  - Weak connection.
	  - Short inserted cord length.
	  - Worn out tool blade.
	- O.L.P is off.
	  - Capacity of O.L.P is small.
	  - Characteristics of O.L.P is bad.
	  - Bad connection.
	  - Power is disconnected.
	  - Inner Ni-Cr wire blows out.
	  - Bad internal connection.
	  - Faulty terminal caulking (Cu wire is cut).
	  - Bad soldering.
	- No electric power on compressor. - Faulty compressor.
	- Faulty PTC.
	  - Power does not conduct. - Damage.
	  - Bad characteristics. - Initial resistance is big.
	  - Bad connection with compressor.
	  - Too loose.
	  - Assembly is not possible.
	  - Bad terminal connection.
	4) During defrost.
	- Start automatic defrost.
	- Cycle was set at defrost when the refrigerator was produced.
		* Measuring instrument : Multi tester
		■ Check the voltage. If the voltage is within ±85% of the rated voltage, it is OK.
		■ Check the terminal movement.
		■ Check both terminals of power cord. Power conducts : OK. No power conducts : NG
		■ Check both terminals of O.L.P. If power conducts : OK. If not : NG.
		■ Check the resistance of both terminals. At normal temperature 6 : OK. If disconnected : ∞.

TROUBLE DIAGNOSIS

CLAIMS.	CAUSES AND CHECK POINTS.	HOW TO CHECK

2. No cooling.	2) Refrigeration system is clogged.
	- Moisture clogged.
	  - Residual moisture in the evaporator.
	  - Air Blowing.
	  - Not performed.
	  - Too short.
	  - Impossible moisture confirmation.
	  - Low air pressure.
	  - Leave it in the air.
	  - During rest time.
	  - After work.
	  - Caps are missed.
	  - Residual moisture.
	  - Not dried in the compressor.
	  - Elapsed more than 6 months after drying
	  - Caps are missed.
	  - No pressure when it is open.
	- No electric power on therm-ostat.
	  - Insufficient drier capacity.
	  - Dry drier - Drier temperature.
	  - Leave it in the air.
	  - Check on package condition.
	  - Good storage after finishing.
	  - Residual moisture in pipes.
	  - Caps are missed.
	  - During transportation.
	  - During work.
	  - Air blowing.
	  - Not performed.
	  - Performed.
	  - Too short time.
	  - Low air pressure.
	  - Less dry air.
	  - Moisture penetration into the refrigeration oil. - Leave it in the air. - Moisture penetration.
	- Weld joint clogged.
	  - Short pipe insert.
	  - Pipe gaps.
	  - Too large.
	  - Damaged pipes.
	  - Too much solder.
	- Drier cloggeing.
	  - The capillary tube inserted depth. - Too much.
	  - Capillary tube melts. - Over heat.
	  - Clogged with foreign materials.
	  - Desiccant powder.
	  - Weld oxides.
	  - Drier angle.
	  - Reduced cross section by cutting. - Squeezed.
	- Foreign material clogging.
	  - Compressor cap is disconnected.
	  - Foreign materials are in the pipe.
		■ Check the clogged evaporator by heating (as soon as the cracking sound begins, the evaporator start freezing)
		■ The evaporator does not cool from the beginnig (no evidece of misture attached).
		The evaporator is the same as before even heat is applied.

TROUBLE DIAGNOSIS

CLAIMS.	CAUSES AND CHECK POINTS.	HOW TO CHECK

3. Refrigeration is weak.	1) Refrigerant Partly leaked.
	- Weld joint leak.
	- Parts leak.
	
	2) Poor defrosting capacity.
	- Drain path (pipe) clogged.
	  - Inject P/U into drain hose.
	  - Inject through the hole.
	  - Seal with drain.
	  - Foreign materials penetration.
	  - P/U lump input.
	  - Screw input.
	  - Other foreign materials input.
	  - Cap drain is not disconnected.
	- Defrost heater does not generate heat.
	  - Parts disconnected.
	  - Heater Sheath
	  - Wire is cut.
	  - Lead wire.
	  - Heating wire.
	  - Contact point between heating and electric wire.
	  - Dent by fin evaporator.
	  - Heating wire is corroded
	  - Water penetration.
	  - Bad terminal connection.
		■ Check visually.
		
		■ Check terminal
		Conduction: OK.
		No conduction: NG.
		If wire is not cut, refer to resistance.
		P=Power
		V=Voltage
		R=Resistance
		$P=\frac{V^2}{R}$
		$R=\frac{V^2}{P}$

TROUBLE DIAGNOSIS

CLAIMS.	CAUSES AND CHECK POINTS.	HOW TO CHECK

3. Refrigeration is weak.	- Residual frost.
	  - Weak heat from heater.
	  - Sheath Heater - rated.
	  - Heater plate - rated.
	  - Too short defrosting time.
	  - Defrost Sensor.
	  - Faulty characteristics.
	  - Seat-D(missing, location. thickness).
	  - Structural fault.
	  - Gasket gap.
	  - Air inflow through the fan motor.
	  - Bad insulation of case door.
	- No automatic defrosting.
	- Defrost does not return.
	
	3) Cooling air leak.
	- Bad gasket adhestion
	  - Gap.
	  - Bad attachment.
	  - Contraction.
	- Door sag.
	  - Bad adhesion.
	  - Weak binding force at hinge.
	
	4) No cooling air circulation.
	- Faulty fan motor.
	  - Fan motor.
	  - Self locked.
	  - Wire is cut.
	  - Bad terminal contact.
	  - Door switch.
	  - Faults.
	  - Contact distance.
	  - Button pressure.
	  - Melted contact.
	  - Contact.
	  - Refrigerator and freezer switch reversed.
	  - Button is not pressed.
	  - Poor door attachment.
	  - Door liner (dimension).
	  - Contraction inner liner.
	  - Misalignment.
	  - Bad terminal connection.
	  - P/U liquid leak.
		■ Check the fan motor conduction: OK.
		No conduction: NG.

TROUBLE DIAGNOSIS

CLAIMS.	CAUSES AND CHECK POINTS.	HOW TO CHECK

3. Refrigeration is weak.	4) No cooling air circulation.
	- Faulty fan motor. — Fan is constrained.
	  - Fan shroud contact. - Clearance.
	  - Damping evaporator contact.
	  - Accumulated residual frost.
	- Small cooling air discharge.
	  - Insufficient motor RPM
	  - Fan overload. - Fan misuse.
	  - Bad low termperature RPM characteristics.
	  - Rated power misuse.
	  - Low voltage.
	  - Faulty fan.
	  - Fan misuse.
	  - Bad shape.
	  - Loose connection. - Not tightly connected.
	  - Insert depth.
	  - Shorud. — Bent.
	  - Ice and foreign materials on rotating parts.
	5) Compressor capacity.
	- Rating misuse.
	- Small capacity.
	- Low valtage.
	6) Refrigerant too much or too little.
	- Malfunction of charging cylinder.
	- Wrong setting of refrigerant.
	- Insufficient compressor. - Faulty compressor.
	7) Continuous operation
	- No contact of temperature controller. - Foreign materials.
	8) Damper opens continuously.
	- Foreign materials jammed.
	  - P/U liquid dump.
	  - EPS water sediment.
	  - Screw.
	- Failed sensor. - Position of sensor.
	- Characteristics of damper.
	  - Bad characteristics of its own temperatue.
	  - Parts misuse.
	  - Charge of temperature - Impact. characteristics.
	9) Food storing place. - Near the outlet of cooling air.
		■ Check visually after disassembly.
		■ Check visually after disassembly.

TROUBLE DIAGNOSIS

CLAIMS.	CAUSES AND CHECK POINTS.	HOW TO CHECK
4. Warm refrigerator compartment temperature.	1) Colgged cooling path. - P/U liquid leak. - Foreign materials. — P/U dump liquid. 2) Food storate. - Store hot food. - Store too much at once. - Door open. - Packages block air flow.	

5. No automatic operation. (faulty contacts.)	1) Faulty temperature sensor in freezer or refrigerator compartment.
	- Faulty contact.
	- Faulty temperature characteristics.
	2) Refrigeration load is too much.
	- Food.
	  - Too much food.
	  - Hot food.
	- Frequent opening and closing.
	- Cool air leak.
	- Poor door close. – Partly opens.
	3) Poor insulation.
	4) Bad radiation.
	- High ambient temperature.
	- Space is secluded.
	5) Refrigerant leak.
	6) Inadequate of refrigerant.
	7) Weak compressor discharging power.
	- Different rating.
	- Small capacity.
	8) Fan does not work.
	9) Button is positioned at "strong."
		■ Inspect parts measurements and check visually.

6. Dew and ice formation.	1) Ice in freeezer compartment.
	- External air inflow. — Rubber motor assembly direction(reverse).
	- Door opens but not closes.
	  - Weak door closing power.
	  - Stopper malfunction.
	  - Door sag.
	  - Food hinders door closing.
	- Gap around gasket. — Contraction, distortion, loose, door twisted, corner not fully inserted.
	- Food vapor. — Storing hot food. — Unsealed food.
	2) Condensation in the refrigerator compartment.
	- Door opens but not closes.
	  - Insufficient closing.
	  - Door sag.
	  - Food hinders door closing.
	- Gasket gap.
	3) Condensation on liner foam.
	- Cool air leak and transmitted.
	  - Not fully filled.
	  - Toop table part.
	  - Out plate R/L part.
	  - Flange gap. — Not sealed.
	  - Gasket gap.	

TROUBLE DIAGNOSIS

CLAIMS.	CAUSES AND CHECK POINTS.	HOW TO CHECK
6. Dew and ice formation.	4) Dew on door. - Dew on the duct door. - Duct door heater is cut. - Dew on the dispense recess. — Recess Heater is cut. / Duct door is open. / Foreign material clogging. - Dew on the door surface. — Not fully filled. — Surface. / Corner. — Liquid shortage. Liquid leak. / P/U liquid contraction. - Dew on the gasket surface. — Bad wing adhesion. — Wing sag(lower part). / Door liner shape mismatch. Corner. — Too much notch. / Broken. Home Bar heater is cut. 5) Water on the floor. - Dew in the refrigerator compartment. - Defrosted water overflows. — Clogged discharging hose. - Discharging hose location. — Evaporation tray located at wrong place. - Tray drip. — Damaged. / Breaks, holes. / Small Capacity. - Position of drain.	
7. Sounds	1) Compressor compartment operating sounds. - Compressor sound inserted. — Sound from machine itself. / Sound from vibration. Restrainer. Rubber seat. — Too hard. / Distorted. / Aged. / Burnt. Stopper. — Bad Stopper assembly. — Not fit (inner diameter of stopper). / Tilted. / Not Compressor base not connected. Bad welding compressor stand(fallen). Foreign materials in the compressor compartment. - O.L.P. sound. — Chattering sound. / Insulation paper vibration. - Capacitor noise. Pipe sound. — Pipe contacts each other. – Narrow interval. / No vibration damper. — Damping rubber-Q. / Damping rubber-S. / Capillary tube unattached.	

TROUBLE DIAGNOSIS

CLAIMS.	CAUSES AND CHECK POINTS.	HOW TO CHECK
7. Sounds	1) Compressor compartment operating sounds. Transformer sound. — Its own fault. — Core gap. Bad connection. — Correct screw connection. Drip tray vibration sound. — Bad assembly. Distortion. Foreign materials inside. Back cover machine sound. — Bad connection. Partly damaged. Condenser drain sound. — Not connected. Bad pipe caulking. 2) Freezer compartment sounds. Fan motor sound. — Normal operating sound. Vibration sound. — Aged rubber seat. Bad torque for assembling motor bracket. Sounds from fan contact. — Fan guide contact. Shroud burr contact. Damping evaporator contact. Residual frost contact. — Poor treatment Cord heater. Narrow evaporator interval. Unbalance fan sounds. — Unbalance. — Surface machining conditions. Fan distortion. Misshappen. Burr. Ice on the fan. — Air intake (opposite to motor rubber assembly.) Motor shaft contact sounds. — Supporter disorted. Tilted during motor assembly. Resonance. Evaporator noise. — Evaporator pipe contact. — No damping evaporator. Sound from refrigerant. — Stainless steel pipe shape in accumulator. Sound from fin evaporator and pipe during expansion and contraction. 3) Bowls and bottles make contact on top shelf. 4) Refrigerator roof contact. 5) Refrigerator side contact. 6) Insufficient Lubricants on door hinge.	

TROUBLE DIAGNOSIS

CLAIMS.	CAUSES AND CHECK POINTS.	HOW TO CHECK
8. Faulty lamp (freezer and refrigerator compartment).	1) Lamp problem. — Filament blows out. / Glass is broken. 2) Bad lamp assembly. — Not inserted. / Loosened by vibration. 3) Bad lamp socket. Disconnection. — Bad soldering. / Bad rivet contact. Short. — Water penetration. — Low water level in tray. Bad elasticity of contact. Bad contact(corrosion). 4) Door switch. — Its own defect. / Refrigerator and freezer switch is reversed. / Travlel distance. / Bad connection. / Bad terminal contact. / P/U liquid leak..	
9. Faulty internal voltage(short).	1) Lead wire is damaged. Wire damage when assembling P.T.C. Cover. Outlet burr in the bottom plate. Pressed by cord heater. lead wire, evaporator pipe. 2) Exposed terminal. Compressor Compartment terminal. - Touching other components. Freezer compartment terminal. - Touching evaporator pipe. 3) Faulty parts. Transformer. — Coil contacts cover. / Welded terminal parts contact cover. Compressor. — Bad coil insulation. Plate heater. Melting fuse. — Sealing is broken. — Moisture penetration. Cord heater. — Pipe damaged. — Moisture penetration. / Bad sealing. Sheath heater.	■ Connect conduction and non-conduction parts and check with tester. Conduction: NG. Resistance∞: OK.

TROUBLE DIAGNOSIS

CLAIMS.	CAUSES AND CHECK POINTS.	HOW TO CHECK
10. Structure, appearance and others.	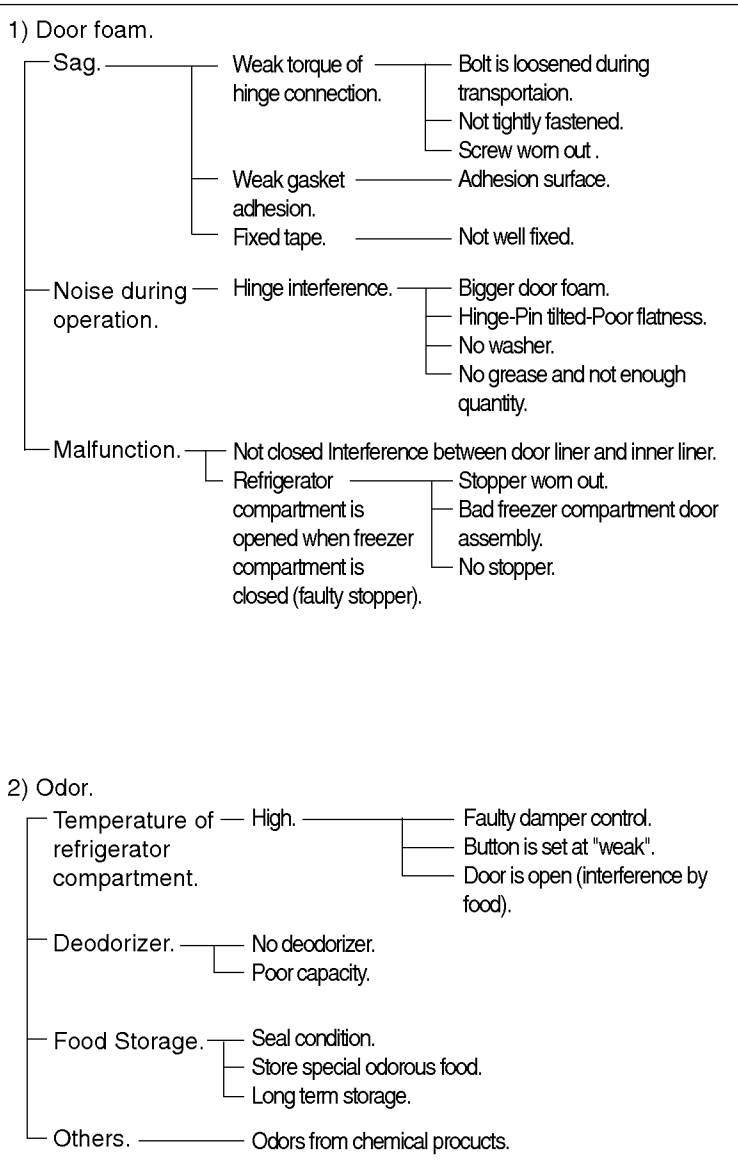	

2. Faults

2-1. Power

Problems	Causes	Checks	Measures	Remarks
No power on outlet.	- Power cord cut. - Faulty connector insertion. - Faulty connection between plug and adapter.	- Check the voltage with tester. - Check visually. - Check visually.	-Replace the components. -Reconnect the connecting parts. - Reconnect the connecting parts.	
Fuse blows out.	- Short circuit by wrong connection. - Low voltage products are connected to high voltage. - Short circuit by insects. - Electricity leakage. - High voltage. - Short circuit of components (tracking due to moisture and dust penetration).	- Check the fuse with tester or visually. - Check the input volt are with tester (between power cord and products). - Check the resistance of power cord with testerf (if it is 0Ω, it is shorted).	- Find and remove the cause of problem(ex. short, high voltage, low voltage). - Replace with rated fuse.	- Replace with rated fuse after confirming its specification. ■ If fuse blowns out frequently, reconfirm the cause and prevent.

2-2. Compressor

Problems	Causes	Checks	Measures	Remarks
Compressor does not operate.	- Faulty PTC.	- Check the resistance. Vlaue:∞ is defective.	- If resistance is infinite, replace it with new one. - If it is not infinite, it is normal. - Check other parts.	
	- Compressor is frozen.	- If compressor assembly parts are normal(capacitor, PTC, OLP), apply power directly to the compressor to force operation. 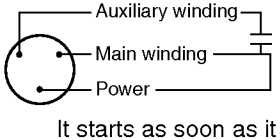 OLP It starts as soon as it is contacted.	- During forced operation: - Operates: Check other parts. - Not operate: Replace the frozen compressor with new one, weld, evacuate, and recharge refrigerant. • Refer to weld repair procedures.	

2-3. Temperature

Problems	Causes	Checks	Measures	Remarks
High temperature in the freezer compartment.	Poor cool air circulation due to faulty fan motor.	- Lock — Check resistance with a tester. 0Ω: short. ∞Ω: cut. - Rotate rotor manually and check rotation. - Wire is cut. - Bad terminal contact: Check terminal visually. - Fan constraint. – Fan shroud contact: Confirm visually. – Fan icing: Confirm visually.	- Replace fan motor. - Reconnect and reinsert. - Maintain clearance and remove ice (Repair and/or replace shroud if fan is constrained by shroud deformation).	
	Faulty fan motor due to faulty door switch operation.	- Iced button (faulty) operation: Press button to check - Faulty button pressure and contact: Press button to check operation. - Door cannot press door switch button: Check visually.	- Confirm icing causes and repair. - Replace door switch. - Door sag: fix door. - Door liner bent:replace door or attach sheets.	
	Bad radiation conditions in compressor compartment.	- Check the clearance between the refrigerator and wall (50 mm in minimum). - Check dust on the grill in compressor compartment. - Check dust on the coils condenser.	- Keep clearance between refrigerator and walls (minimum 50mm). - Remove dust and contaminants from grill for easy heat radiation. - Remove the dust with vacuum cleaner from the coils condenser while the refrigerator is off.	- The fan may be broken if cleaning performs while the refrigerator is on.

2-4. Cooling

Problems	Causes	Checks	Measures	Remarks
High temperature in the freezer compartment.	Refrigerant leak.	Check sequence 1. Check the welded parts of the drier inlet and outlet and drier auxiliary in the compressor compartment (high pressure side). 2. Check the end of compressor sealing pipe (low pressure side). 3. Check silver soldered parts. (Cu + Fe / Fe + Fe). 4. Check bending area of wire condenser pipe in compressor compartment (cracks can happen during bending). 5. Check other parts (compressor compartment and evaporators in freezer compartment).	Weld the leaking part, recharge the refrigerant.	Drier must be replaced.
	Shortage of refrigerant.	Check frost formation on the surface of evaporator in the freezer compartment. - If the frost forms evenly on the surface, it is OK. - If it does not, it is not good.	- Find out the leaking area, repair, evacuate, and recharge the refrigerant. - No leaking, remove the remaining refrigerant, and recharge new refrigerant.	Drier must be replaced.

Problems	Causes	Checks	Measures	Remarks
High temperature in the freezer compartment.	Cycle pipe is clogged.	Check sequence. 1. Check temperature of condenser manually. If it is warm, it is OK. If it is not, compressor discharging joints might be clogged. 2. Manually check whether hot line pipe is warm. If it is warm, it's OK. If it is not, condenser outlet weld joints might be colgged.	- Heat up compressor discharging weld joints with touch, disconnect the pipes, and check the clogging. Remove the causes of clogging, weld, evacuate, and recharge the refrigerant. - If it's warm, it's OK. If it's not, condenser discharging line weld joints might be clogged. Disconnect with torch, remove the causes, evacuate, and recharge seal refrigerant.	Direr must be replaced.
	Leak at loop pipe weld joint (discharge) in compressor.	Check sequence. 1. Manually check whether condenser is warm, It is not warm and the frost forms partly on the evaporator in the freezer compartment.	Replace the compressor, weld, evacuate, and recharge refrigerant.	Drier must be replaced.
	Faulty cooling fan in the compressor compartment.	Check sequence. 1. Check cooling fan operation. 2. Check that cooling fan is disconnected from the motor.	- Replace if motor does not operate. - If fan is disconnected, check fan damage and reassemble it. ■ Refer to fan motor disassembly and assembly sequence.	

2-5. Defrosting failure

Problems	Causes	Checks	Measures	Remarks
No defrosting.	Heater does not generate heat as the heating wire is cut or the circuit is shorted. 1) Heating wire is damaged when inserting into the evaporator. 2) Lead wire of heater is cut. 3) Heating wire at lead wire contacts is cut.	1. Check the resistance of heater. 0Ω: Short. ∞Ω: Cut. Tens to thousands Ω: OK. 2. Check the resistance between housing terminal and heater surface. 0Ω: Short. ∞Ω: Cut. Tens to thousands Ω: Short.	Heating wire is short and wire is cut. • Parts replacement: Refer to parts explanations.	Seal the lead wire with insulation tape and heat contraction tube if the cut lead wire is accessible to repair.
	Sucking duct and discharging hole are clogged: 1. Impurities. 2. Ice.	1. Confirm foreign materials. In case of ice, insert the copper line through the hole to check. 2. Put hot water into the drain (check drains outside).	1) Push out impurities by inserting copper wire.(Turn off more than 3hours and pour in hot water if frost is severe.) 2) Put in hot water to melt down frost. 3) Check the water outlet. 4) Push the heater plate to sucking duct manually and assemble the disconnected parts.	
	Gap between Sucking duct and Heater plate(Ice in the gap).	1. Confirm in the Sucking duct.	1) Turn off the power, confirm impurities and ice in the gap, and supply hot water until the ice in the gap melts down. 2) Push the Heater plate to drain bottom with hand and assemble the disconnected parts.	
	Wrong heater rating (or wrong assembly).	1. Check heater label. 2. Confirm the capacity after substituting the resistance value into the formula. $P=\frac{V^2}{R}$ (V: Rated voltage of user country) (R: Resistance of tester[Ω]) Compare P and lavel capacity. Tolerance: ±7%	Faults:replace. - How to replace: Refer to main parts.	

Problems	Causes	Checks	Measures	Remarks
No defrosting	Melting fuse blows out. 1) Lead wire is cut. 2) Bad soldering.	- Check melting fuse with tester. - If 0Ω: OK. If ∞Ω: wire is cut.	Faullty parts: parts replacement. - Check wire color when maeasuring resistance with a tester.	
	Ice in the Sucking duct. 1) Icing by foreign materials in the duct. 2) Icing by cool air inflow through the gap of heater plate. 3) Icing by the gap of heater plate.	1. Check the inner duct with mirror. 2. Check by inserting soft copper wire into the duct (soft and thin copper not to impair heating wire).	1) Turn power off. 2) Raise the front side(door side), support the front side legs, and let the ice melt naturally. (If power is on, melt the frost by forced defrosting.) 3) Reassemble the heater plate.	
	Bad cool air inflow and discharge, and bad defrosting due to faulty contact and insertion (bad connector insertion into housing of heater, melting, fuse and motor fan).	1. Turn on power, open or close the door, check that motor fan operates (If it operates, motor fan is OK). 2. Disconnect parts in the refrigerator compartment, check the connection around the housing visually, defrost, and confirm heat generation on the heater. Do not put hands on the sheath heater. 3. Check the parts which have faults described in 1, 2 (mechanical model: disconnect thermostat from the assembly).	1) Check the faulty connector of housing and reassemble wrongly assembled parts. 2) If the parts are very damaged, remove the parts and replace it with a new one.	

2-6. Icing

Problems	Causes	Checks	Measures	Remarks
Icing in the refrigerator compartment. - Damper icing. - Pipe icing. - Discharging pipe icing.	1) Bad circulation of cool air. - Clogged intake port in the refrigerator compartment. - Sealing is not good. - Too much food is stored and clogs the discharge port. - Bad defrosting.	- Check the food is stored properly (check discharge and intake port are clogged). - Check icing on the surface of baffle and cool air path (pipe) after dissembling the container box. - Check icing at intake ports of freezer and refrigerator compartment.	- Be acquainted with how to use. - Sealing on connecting parts. - Check the damper and replace it if it has defects. - Check defrost. (After forced defrosting, check ice in the evaporator and pipes.)	- Check the defrost related parts if problem is caused by faulty defrosting.
	2) Faulty door or refrigerator compartment. - Faulty gasket. - Faulty assembly.	- Check gasket attached conditions. - Check door assembly conditions.	- Correct the gasket attachment conditions and replace it. - Door assembly and replacement.	- Replacement should be done when it cannot be repaired.
	3) Overcooling in the refrigerator compartment. - Faulty damper in the refrigerator compartment. - Faulty MICOM (faulty sensor)	- Check refrigerator compartment is overcooled (when button pressed on "weak"). - Check parts are faulty.	- Replace faulty parts.	
	4) Bad defrosting - Heater wire is cut. - Defective defrost sensor. - Defrosing cycle.	- Check frost on the evaporator after dissembling shroud and fan grille. - Check ice on intake port of freezer and refrigerator compartment.	- Check parts related to defrosting. - Check defrosting. (Check ice on the evaporator and pipe.)	- Moisture cannot frost on the evaporator but can be sucked into the refrigerator, being condensed and iced, interferes with cool air circulation, and suppresses sublimation.
	5) Customers are not familiar with this machine. - Door opens. - High temperature, high moisture, and high load.	- Check food interferes with door closing. - Check ice on the ceilings.	- Be acquainted with how to use.	

Problems	Causes	Checks	Measures	Remarks
Ice in the freezer compartment. - Surface of fan grille. - Wall of freezer compartment. - Cool air discharging port. - Basket(rack) area. - Food surface. - Icing in the shute.	1) Bad cooling air circulation. - Intake port is colgged in the freezer compartment. - Discharging port is Clogged. - Too much food is stored. - Bad defrosting.	- Check food storage conditions visually.(Check clogging at intake and discharging port of cooling air.) - Check food occupation ratio in volume(Less than 75%). - Check frost on the evaporator after dissembling shroud and fan grille. - Check icing at intake port of refrigerator compartment.	- Be acquainted with how to use. - Check defrost (Check ice on the evaporator and pipes after forced defrosting).	- Check the parts related to defrosting if the problem is caused by the faulty defrosting.
	2) Bad freezer compartment door - Faulty gasket - Faulty assembly	- Check gasket attachment conditions. - Check door assembly conditions.	- Correct the gasket attachement conditions and replace it. - Door assembly and replacement.	- Replace when it can not be repaired.
	3) Over freezing in the freezer compartment. - Faulty MICOM.	- Refrigerator operates pull down. (Check if it is operated intermittently) - The Temperature of freezer compartment is satisfactory, but over freezing happens in the refrigerator compartment even though the notch is set at "weak".	-Replace defective parts.	
	4) Bad defrosting. - Heater wire is cut. - Faulty defrost sensor. - Defrosting cycle	- Check frost on the evaporator after dissembling shroud and grille. - Check ice on the intake port in the refrigerator compartment.	- Check parts related to defrosting. - Check defrosting.(Check ice on the evaporator and pipes after forced defrosting.)	
	5) User is not familiar with how to use. - Door opens. - High moisture food(water) is stored.	- Check food holds door open. - Check ice on the ice tray.	- Be acquainted with how to use.	

2-7. Sound

Problems	Causes	Checks	Measures	Remarks
"Whizz" sound	1. Loud sound of compressor operation.	1.1 Check the level of the refrigerator. 1.2 Check the rubber seat conditions (sagging and aging).	1) Maintain horizontal level. 2) Replace rubber and seat if they are sagged and aged. 3) Insert rubber where hand contact reduces noise in the pipe. 4) Avoid pipe interference. 5) Replace defective fan and fan motor. 6) Adjust fan to be in the center of bell mouth of the fan guide. 7) Leve a clearance between interfering parts and seal gaps in the structures. 8) Reassemble the parts which make sound. 9) Leave a clearance if evaporator pipes and suction pipe touch freezer shroud.	
	2. Pipes resonat sound which is connected to the compressor.	2.1 Check the level of pipes connected to the compressor and their interference. 2.2 Check rubber inserting conditions in pipes. 2.3 Touch pipes with hands or screw -driver (check the change of sound).		
	3. Fan operation sound in the freezer compartment.	3.1 Check fan insertion depth and blade damage. 3.2 Check the interference with structures. 3.3 Check fan motor. 3.4 Check fan motor rubber insertion and aging conditions.		
	4. Fan operation sound in the compressor compartment.	4.1 Same as fan confirmation in the refrigerator. 4.2 Check drip tray leg insertion. 4.3 Check the screw fastening conditions at condenser and drip tray.		

Problems	Causes	Checks	Measures	Remarks
Vibration sound. ("Cluck")	1. Vibration of shelves and foods in the refrigerator. 2. Pipes interference and capillary tube touching in the compressor. compartment. 3. Compressor stopper vibration. 4. Moving wheel vibration. 5. Other structure and parts vibration.	1-1. Remove and replace the shelves in the refrigerator 1-2. Check light food and container on the shelves. 2-1. Touch pipes in the compressore compartment with hands. 2-2 Check capillary tube touches cover back. 3-1 Check compressor stopper vibration. 4-1 Check vibration of front and rear moving wheels. 5-1 Touch other structures and parts.	1) Reassemble the vibrating parts and insert foam or cushion where vibration is severe. 2) Leave a clearance where parts interfere with each other. 3) Reduce vibration with rubber and restrainer if it is severe. (especially, compressor and pipe). 4) Replace compressor stopper if it vibtates severely.	
Irregular sound. ("Click").	1. It is caused by heat expansion and contraction of evaporator, shelves, and pipes in the refrigerator.	1-1 Check time and place of sound sources.	1) Explain the principles of refrigeration and that the temperature difference between operation and defrosting can make sounds. 2) If evaporator pipe contacts with other structures, leave a clearance between them (freezer shroud or inner case).	

Problems	Causes	Checks	Measures	Remarks
Sound "Burping" (almost the same as animals crying sound).	It happens when refrigerant expands at the end of capillary tube.	- Check the sound of refrigerant at the initial installation. - Check the sound when the refrigerator starts operation after forced defrosting. - Check the restrainer attachment conditions on the evaporator and capillary tube weld joints.	- Check the restrainer attached on the evaporator and capillary tube weld joints and attach another restrainer. - If it is continuous and servere, insert capillary tube again (depth:15±3mm) - Fasten the capillary tube to suction pipes or detach in the compressor compartment. - Explain the principles of freezing cycles.	
Water boiling or flowing sound.	It happens when refrigerant passes orifice in accumulator internal pipes by the pressure difference between condenser and evaporator.	- Check the sound when compressor is turned on. - Check the sound when compressor is turned off.	- Explain the principles of freezing cycles and refrigerant flowing phenomenon by internal pressure difference. - If sound is servere, wrap the accumulator with foam and restrainer.	
Sound of whistle when door closes.	When door closes, the internal pressure of the refrigerator decreases sharply below atomosphere and sucks air into the refrigerator, making the whistle sound.	- Check the sound by opening and closing the refrigerator or freezer doors.	- Broaden the cap of discharge hose for defrosting in the compressor compartment. - Seal the gap with sealant between out and inner cases of hinge in door.	

2-8. Odor

Problems	Causes	Checks	Measures	Remarks
Food Odor.	Food (garlic, kimchi, etc)	- Check the food is not wrapped. - Check the shelves or inner wall are stained with food juice. - Check the food in the vinyl wraps. - Chedk food cleanliness.	- Dry deodorizer in the shiny and windy place. - Store the food in the closed container instead of vinyl wraps. - Clean the refrigerator and set button at "strong".	
Plastic Odor.	Odors of mixed food and plastic odors.	- Check wet food is wrapped with plastic bowl and bag. - It happens in the new refrigerator.	- Clean the refrigerator. - Persuade customers not to use plastic bag or wraps with wet food or odorous foods.	
Odor from the deodorizer.	Odor from the old deodorizer.	- Check the deodorizer odors.	- Dry the deodorizer with dryer and then in the shiny and windy place. - Remove and replace the deodorants.	*Deodorizer : option

2-9. Micom

Problems	Symptom	Causes		Checks	Measures	Remarks
Bad PCB electric power.	All display LEDS are off.	Bad connection between Main PCB and display circuit.	Bad connector connection from main PCB to display PCB.	Visual check on connector connection.	Reconnect connector.	
		Defective PCB trans.	PCB Trans winding is cut.	Check resistance of PCB Trans input and output terminals with a tester. (If resistance is infinity, trans winding is cut).	Replace PCB Trans or PCB.	Applicable to model without dispenser.
			PCB Trans temperature fuse is burnt out.			
		DefectivePCB electric circuit parts.	Defective regulator IC (7812, 7805).	Check voltage at input/output terminals.	Replace regulator.	Refer to electric circuit in circuit explanation.
			PCB electric terminal fuse is burnt out.	Check fuse in PCB electric terminal with a tester.	Replace PCB fuse.	
			STR Parts are damaged.	Check if STR No. 2 and 3 pins are cut when power is off.	Replace parts.	Applicable to model with dispenser.
	Abnormal display LED operation	Bad connection between Main PCB and display circuit.	Lead Wire connecting main PCB and display PCB is cut or connector terminal connection is bad.	Check Lead Wire terminals connecting Main PCB and display PCB with a tester.	Reconnect Lead Wire and directly connect defective contact terminal to Lead Wire.	
		Defective LED module.	Defective LED.	Check if all LEDs are on when Main PCB Test switch is pressed (or when both freezer key and power freezer key are pressed at the same time for more than one second.)	Replace display PCB.	Refer to display circuit in circuit explanation.

Problems	Symptom	Causes		Checks	Measures	Remarks
Bad cooling.	Freezer temperature is high.	Compressor does not start.	Compressor Lead Wire is cut.	Check compressor Lead Wire with a tester.	Reconnect Lead Wire.	
			Defective compressor driving relay.	Measure voltage at PCB CON5 (3&9) after pressing main PCB test switch once. It is OK if voltage is normal.	Replace relay(RY1 and RY14) or PCB.	Refer to load driving circuit in circuit explanation.
		Defective freezer sensor.	Defective Freezer sensor parts.	Check resistance of freezer sensor with a tester.	Replace freezer sensor.	Refer to resistance characteristics table of sensor in circuit
			Freezer sensor is substituted for other sensor.	Confirm the color of sensor in circuits (main PCB sensor housing).	Repair main PCB sensor housing	explanation.
		Defective freezer fan motor.	Fan motor lead wire is cut.	Check fan motor lead wire with a tester.	Reconnect lead wire.	
			• Defective door switch (freezer, refrigerator, home bar). • Defective fan motor. • Defective fan motor driving relay.	Measure the voltage between PCB power blue line and fan motor after pressing test switch of Main PCB. If the voltage is normal, it is OK.	• Replace door switch (freezer, refrigerator and home bar). • Replace fan motor. • Replace relay(RY5 & RY6) or PCB.	Refer to load driving circuits in circuit explanation.
		Faulty defrost.		Refer to faulty defrost items in trouble diagnosis functions.		Refer to trouble diagnosis function.

Problems	Symptom	Causes		Checks	Measures	Remarks
Bad cooling	Wrong Refrigerator temperature.	Defective AC Damper.	Check AC damper motor and reed switch and lead wire are cut.	Check if AC damper motor and reed switch lead wire are cut with a tester.	Reconnect lead wire.	
			Check AC damper part.	Refer to AC damper in parts repair guide.	Replace AC damper or refrigerator control box Assembly.	
			Check AC damper Motor driving relay in PCB.	Refer to AC damper in parts repair guide.	Replace relay or PCB.	Refer to single motor damper driving circuits in circuit explanation.
			Foreign materials in AC damper baffles	Check AC damper baffle visually.	Remove foreign materials.	
			Ice formation on AC damper baffles	Check if AC damper Heater wire is cut with a tester.	Replace AC damper or refrigerator control Box Assembly.	
		Defective refrigerator sensor	Defective refrigerator sensor parts.	Check the resistance of refrigerator sensor with a tester.	Replace refrigerator sensor.	Refer to sensor resistance characteristic table in circuit explanation.
			Refrigerator sensor is substituted for other sensor.	Check the sensor color in the circuit. (main PCB sensor housing.)	Repair main PCB sensor housing.	
			Defective refrigerator sensor assembly condition.	Check if refrigerator sensor is not fixed at cover sensor but inner case visually.	Fix again the refrigerator sensor.	

Problems	Symptom	Causes	Checks	Measures	Remarks
Bad defrost.	Defrost is not working.	Defrost lead wire is cut.	Check if defrost lead wire is cut with a tester.	Reconnect Lead Wire.	
		Defective defrost driving relay.	Check the voltage of CON5 (1 and 7) with a tester after pressing main PCB test switch twice. If the voltage is normal then it is OK.	Replace relay (RY 7 and RY 14) or PCB.	Refer to load driving conditions check in circuit explanation.
		Defective defrost sensor parts.	Check the resistance of defrost sensor with a tester.	Replace defrost sensor.	Refer to sensor resistance characteristic table of circuit explanation.
Defective buzzer	Buzzer continuously rings or door opening alarm does not work.	Defective connecting lead wire from main PCB to door switch.	Check lead wire related to door switch with a tester.	Repair lead wire.	
		Defective door switch parts.	Refer to door switch in parts repair guide.	Replace door switch.	
Defective display button	Buzzer does not ring and key does not sense even button is pressed.	Key input wire is cut or bad connector terminal contact in main PCB and display PCB connecting lead wire.	Check input wire with a tester.	Reconnect lead wire and replace or directly connect bad contact terminal to lead wire.	Refer to display circuit in circuit explanation.
		Key is continuously depressed due to structural interference.	Disassemble frame display and confirm visually.	Adjust or replace interfering structures.	

Problems	Symptom	Causes	Checks	Measures	Remarks
Defective display button.	Buzzer rings but key does not sense even button is pressed.	Trouble mode indication.	Check trouble diagnosis function.	Repair troubles	Refer to mode indication in function explanations.
Door Buzzer	Buzzer continuously rings or door opening alarm does not work.	Defective connecting lead wire from main PCB to door switch.	Check lead wire associated with door switch.	Repair lead wire.	Check model with dispenser.
		Defective freezer compartment door switch parts.	Refer to door switch in parts repair guide.	Replace Freezer compartment door switch.	
Bad water/ice dispenser.	Ice and water are not dispensed.	Defective connecting lead wire from Main PCB to lever switch.	Check Lead Wire associated with lever switch with a tester.	Repair lead wire.	
		Defective lever switch parts	Refer to door switch in parts repair guide.	Replace lever switch.	
		Defective photo coupler IC parts.	Check voltage change at photo coupler output terminals with lever switch pressed. It is OK if voltage change is between 0V - 5V.	Replace photo coupler IC or PCB.	
		Defective relay associated with ice dispense (geared motor, cube and dispenser solenoid).	Check relay (RY9, RY11, RY12) with a tester.	Replace defective relay.	
		Defective parts associated with ice dispense (geared motor, cube and dispenser solenoid).	Check resistance of parts with a tester.	Replace defective parts.	
		Defective relay associated with water dispense.	Check relay (RY10) with a tester	Replace defective relay.	
		Defective parts associated with water dispenser.	Check resistance of parts with a tester.	Replace defective parts.	

3. Cooling Cycle Heavy Repair

3-1. The Heavy Repair Standards for Refrigerator with R134a Refrigerant

NO.	Items		Unit	Standards	Purposes	Remarks
1	Pipe and piping system opening time.		Min.	Pipe:within 1 hour. Comp:within 10 minutes. Drier:within 20 minutes.	To protect Moisture Penetration.	The opening time should be reduced to a half of the standards during rain and rainy seasons (the penetration of water into the pipe is dangerous).
2	Welding.		Nitrogen Pressure.	Weld under Nitrogen atmosphere (N_2 pressure: 0.1~0.2 kg/cm^2)	To protect oxide scale formation.	- Refet to repair note in each part. - R134a refrigerant is more susceptible to leaks than R12 and requires more care during welding. - Do not apply force to pipes before and after welding to protect pipe from cracking.
3	N_2 sealed parts.		Confirm N_2 leak.	Confirm air leaking sounds when removing rubber cap. Sound:usable No sound:not usable	To protect moisture penetration.	- In case of evaporator parts, if it doesn't noise when removing rubber cap blow dry air or N_2 gas for more than 1 min use the parts.
4	Refrigeration Cycle.	Evacuation time	Min.	More than 40 minutes.	To remove moisture.	
		Vacuum degree	Torr	Below 0.03(ref)		Note:Only applicable to the model equipped with reverse flow protect plate.
		Vacuum	EA	High and low Pressure sides are evacuated at the same time for models above 200ℓ		Vaccum efficiency can be improved by operating compressor during evacuation.
		Vacuum piping	EA	Use R134a exclusive manifold.	To protect mixing of mineral and ester oils.	The rubber pipes for R12 refrigerant shall be melted when they are used for R134a refrigerant(causes of leak).
		Pipe coupler	EA	Use R134a cxclusive.	To protect R12 Refri-gerant mixing.	
		Outlet (Socket)		R134a exclusive.	〃	
		Plug		R134a exclusive	〃	
5	Refrigerant weighing.		EA	Use R134a exclusively. Weighing allowance:±5g Note:Winter:-5g Summer:+5g	Do not mix with R12 refrigerant.	- Do not weight the refrigerant at too hot or too cold an area.(25°C is adequate.) - Use copper bombe Socket:2SV Plug: 2PV R134a Note:Do not burn O-ring (rubber) during welding.
6	Drier replacement.			-Use R134a exclusively for R134a refrigerator -Use R12 exclusively for R12 refrigerator -Replace drier whenever repairing refrigerator cycle piping.	To remove the moisture from pipe.	
7	Leak check.			-Do not use soapy water for check. it may be sucked into the pipe by.	Detect refrigerant leak area.	-Check oil leak at refrigerant leak area. Use electronic leak detector if oil leak is not found. -The electronic leak detector is very sensitive to halogen gas in the air. It also can detect R141b in urethane. Please practice, therfore, many times before use.

NOTE) Please contact Songso company on +82-53-554-2067 if you have inquiry on heavy repair special facility.

TROUBLE DIAGNOSIS

3-2. Summary Of Heavy Repair

Process	Contents	Tools
Trouble diagnosis		
Remove refrigerant Residuals	- Cut charging pipe ends and discharge refrigerant from drier and compressor.	Filter, side cutters
Parts replacement and welding	- Use R134a oil and refrigerant for compressor and drier - Confirm N_2 sealing and packing conditions before use. Use good one for welding and assembly. - Weld under nitrogen gas atmosphere.(N_2 gas pressure: 0.1-0.2kg/cm^2). - Repair in a clean and dry place.	Pipe Cutter, Gas welder, N_2 gas
Vacuum	- Evacuate for more than forty minutes after connecting manifold gauge hose and vacuum pump to high (drier) and low (compressor refrigerant discharging parts) pressure sides. - Evacuation Speed:113//min.	Vacuum pump(R134a exclusively), Manifold gauge.
Refrigerant charging and charging inlet welding	- Weigh and control the allowance of R134a bombe in a vacuum conditions to be ±5 g with electronic scales and charge through compressor inlet (Charge while refrigerator operates). - Weld carefully after inlet pinching.	R134a exclusive bombe(mass cylinder), refrigerant(R134a) manifold gauge, electronic scales, punching off flier, gas welding machine
Check refrigerant leak and cooling capacity	- Check leak at weld joints. ┌ Minute leak: Use electronic leak detector └ Big leak: Check visually or fingers. Note:Do not use soapy water for check. - Check cooling capacity ① Check radiator manually to see if warm. ② Check hot line pipe manually to see if warm. ③ Check frost formation on the whole surface of the evaporator.	Electronic Leak Detector, Driver(Ruler).
Compressor compartment and tools arrangement	- Remove flux from the silver weld joints with soft brush or wet rag.(Flux may be the cause of corrosion and leaks.) - Clean R134a exclusive tools and store them in a clean tool box or in their place.	Copper brush, Rag, Tool box
Transportation and installation	- Installation should be conducted in accordance with the standard installation procedure.(Leave space of more than 5 cm from the wall for compressor compartment cooling fan mounted model.)	

TROUBLE DIAGNOSIS

3-3. Precautions During Heavy Repair

Items	Precautions
1. Use of tools.	1) Use special parts and tools for R134a.
2. Removal of retained refrigerant.	1) Remove retained refrigerant more than 5 minutes after turning off a refrigerator. (If not, oil will leak inside.) 2) Remove retained refrigerant by cutting first high pressure side (drier part) with a nipper and then cut low pressure side. (If the order is not observed, oil leak will happen.) 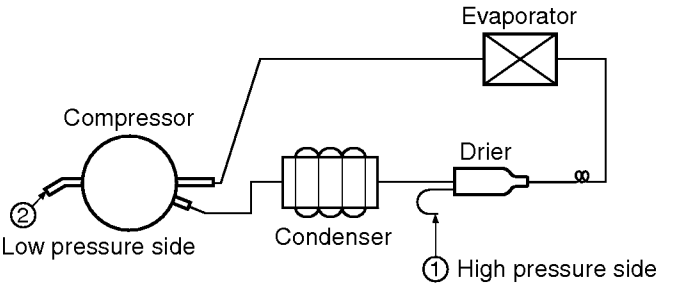
3. Replacement of drier.	1) Be sure to replace drier with R134a only when repairing pipes and injecting refrigerant.
4. Nitrogen blowing welding.	1) Weld under nitrogen atmosphere in order to prevent oxidation inside a pipe. (Nitrogen pressure : 0.1~0.2 kg/cm^2.)
5. Others.	1) Nitrogen or refrigerant R134a only should be used when cleaning inside of cycle pipes inside and sealing. 2) Check leakage with an electronic leakage tester. 3) Be sure to use a pipe cutter when cutting pipes. 4) Be careful not the water let intrude into the inside of the cycle.

TROUBLE DIAGNOSIS

3-4. Practical Work For Heavy Repair

<table>
<tr><th>Items</th><th>Precautions</th></tr>
<tr><td>1. Removal of residual refrigerant.</td><td>
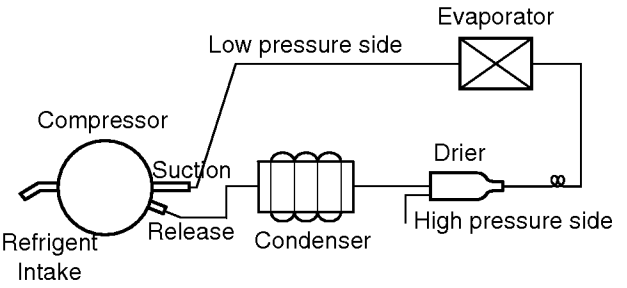

KEYPOINTING
Observe the sequence for removal of refrigerant.
(If not, compressor oil may leak.)
1) Remove residual refrigerant more than 5 minutes later after turning off the refrigerator.
(If not, compressor oil may leak inside.)
2) Remove retained refrigerant slowly by cutting first high pressure side (drier part) with a nipper and then cut low pressure side.
</td></tr>
<tr><td>2. Nitrogen blowing welding.</td><td>
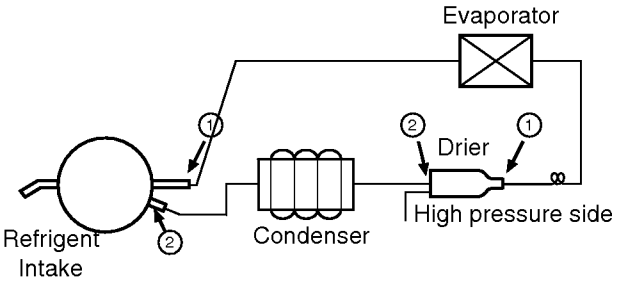

KEYPOINTING
Welding without nitrogen blowing produces oxidized scales inside a pipe, which affect on performance and reliability of a product.

When replacing a drier:
Weld ① and ② parts by blowing nitrogen(0.1~0.2kg/cm^2) to high pressure side after assembling a drier.
When replacing a compressor:
Weld ① and ② parts by blowing nitrogen to the low pressure side.
Note) For other parts, nitrogen blowing is not necessary because it does not produce oxidized scales inside pipe because of its short welding time.
</td></tr>
<tr><td>3. Replacement of drier.</td><td>
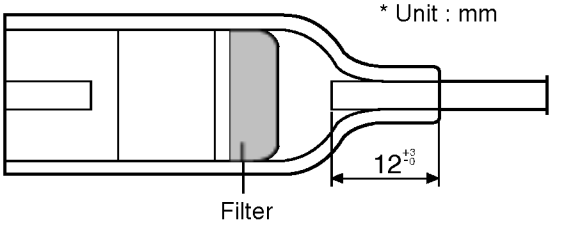

KEYPOINTING
Be sure to check the inserted length of capillary tube when it is inserted. (If too much inserted, a capillary tube is clogged by a filter.)

Inserting a capillary tube
Measure distance with a ruler and put a mark($12^{+3/-0}$)on the capillary tube. Insert tube to the mark, and weld it
</td></tr>
</table>

TROUBLE DIAGNOSIS

Items	Precautions
4.Vacuum degassing.	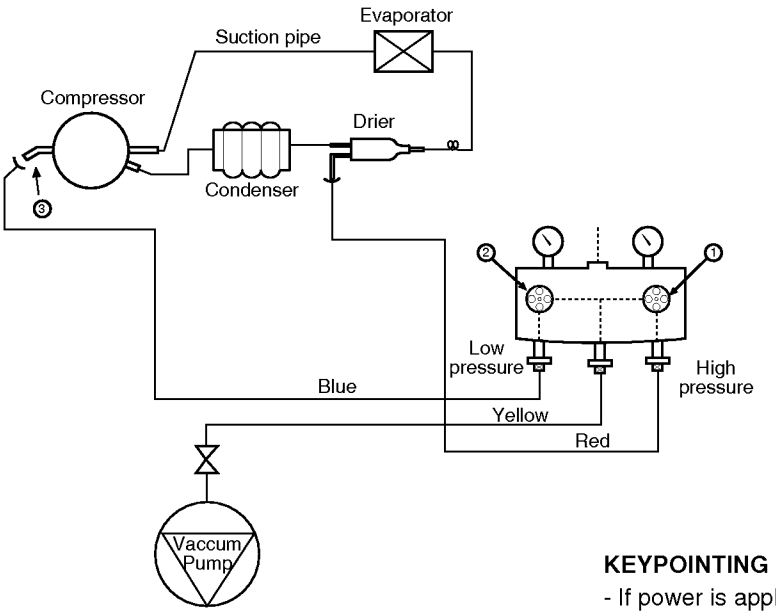 **Pipe Connection** Connect a red hose to the high pressure side and a blue hose to the low pressure side. **Vacuum Sequence** Open ①, ② valves and evacuate for 40 minutes. Close valve ①. **KEYPOINTING** - If power is applied during vacuum degassing, vacuum degassing shall be more effective. - Operate compressor while charging refrigerant. (It is easier and more certain to do like this.)
5.Refrigerant charging.	**Charging sequence** 1) Check the amount of refrigerant supplied to each model after completing vacuum degassing. 2) Evacuate bombe with a vacuum pump. 3) Measure the amount of refrigerant charged. - Measure the weight of an evacuated bombe with an electronic scale. - Charge refrigerant into a bombe and measure the weight. Calculate the weight of refrigerant charged into the bombe by subtracting the weight of an evacuated bombe. 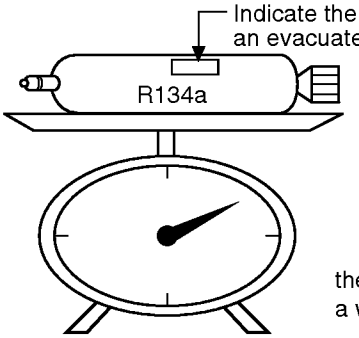 **KEYPOINTING** - Be sure to charge the refrigerant at around 25°C. - Be sure to keep -5g in the winer and +5g in summer **Calculation of amount of refrigerant charged** the amount of refrigerant charged= a weight after charging - a weight before charging (a weight of an evacuated cylinder)

TROUBLE DIAGNOSIS

Items	Precautions
	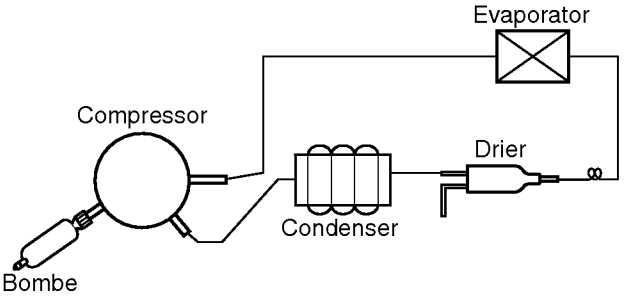 4) Refrigerant Charging Charge refrigerant while operating a compressor as shown above. 5) Pinch a charging pipe with a pinch-off plier after completion of charging. 6) Braze the end of a pinched charging pipe with copper brazer and take a gas leakage test on the welded parts.
6. Gas-leakage test	* Take a leakage test on the welded or suspicious area with an electronic leakage tester.
7. Pipe arrangement in each cycle	Check each pipe is placed in its original place before closing a cover back-M/C after completion of work. Particularly control the size of Joint Drain Pipe 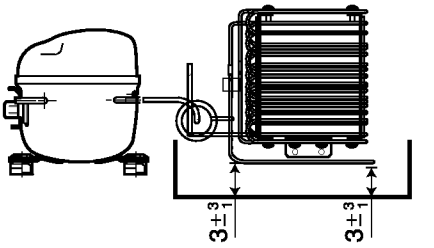

3-5. Standard Regulations For Heavy Repair

1) Observe the safety precautions for gas handling.
2) Use JIG (or wet towel) in order to prevent electric wires from burning during welding. (In order to prevent insulation break and accident.)
3) The inner case shall be melted and insulation material (polyurethane) shall be burnt if not cared during welding inner case parts.
4) The copper pipe shall be oxidized by overheating if not cared during welding.
5) Not allow the aluminum pipes to contact to copper pipes. (In order to prevent corrosion.)
6) Observe that the inserted length of a capillary tube into a drier should be 12^{+3}_{-3} mm.

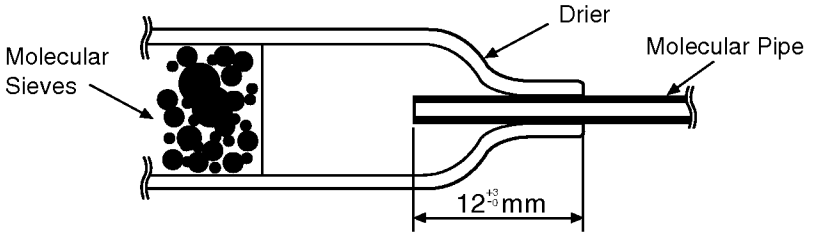

7) Make sure that the inner diameter should not be distorted while cutting a capillary tube.
8) Be sure that a suction pipe and a filling tube should not be substituted each other during welding. (High efficiency pump.)

TROUBLE DIAGNOSIS

3-6. Brazing Reference Drawings

1) Asia / Middle-East Africa

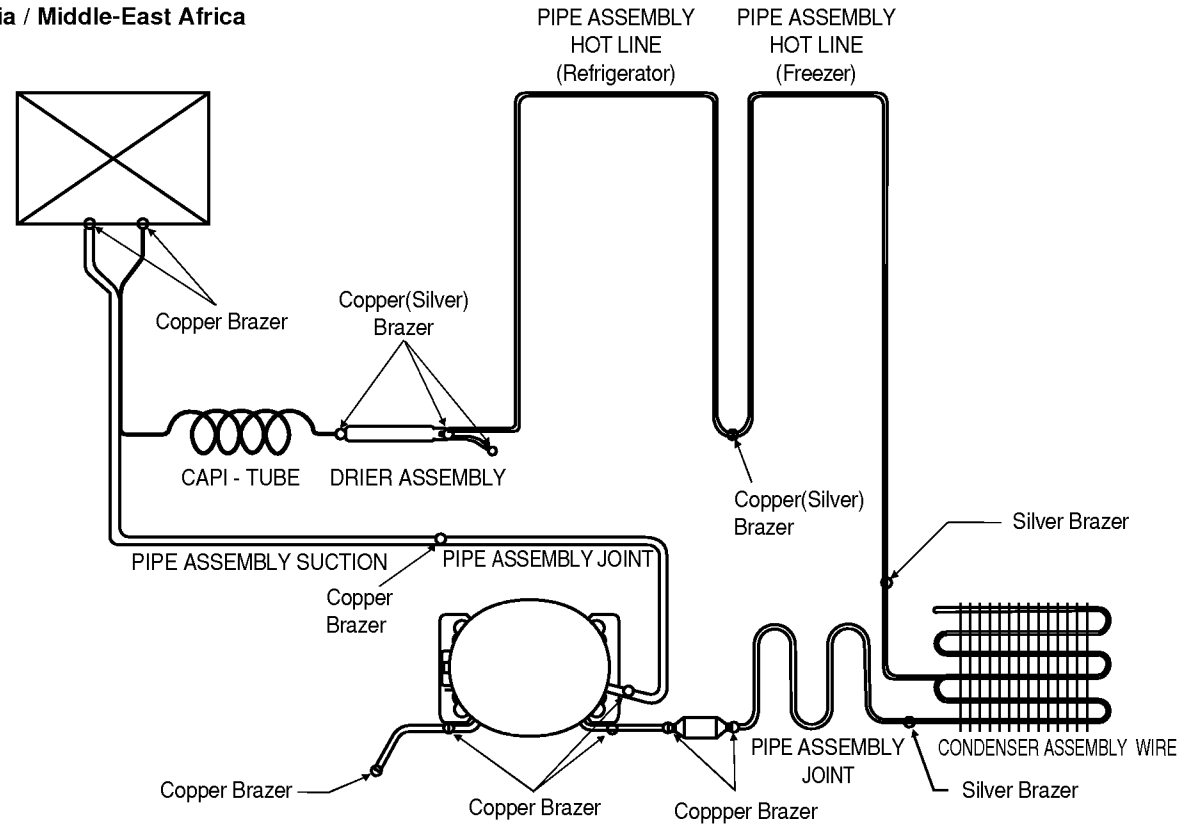

2) Europe & CIS / America

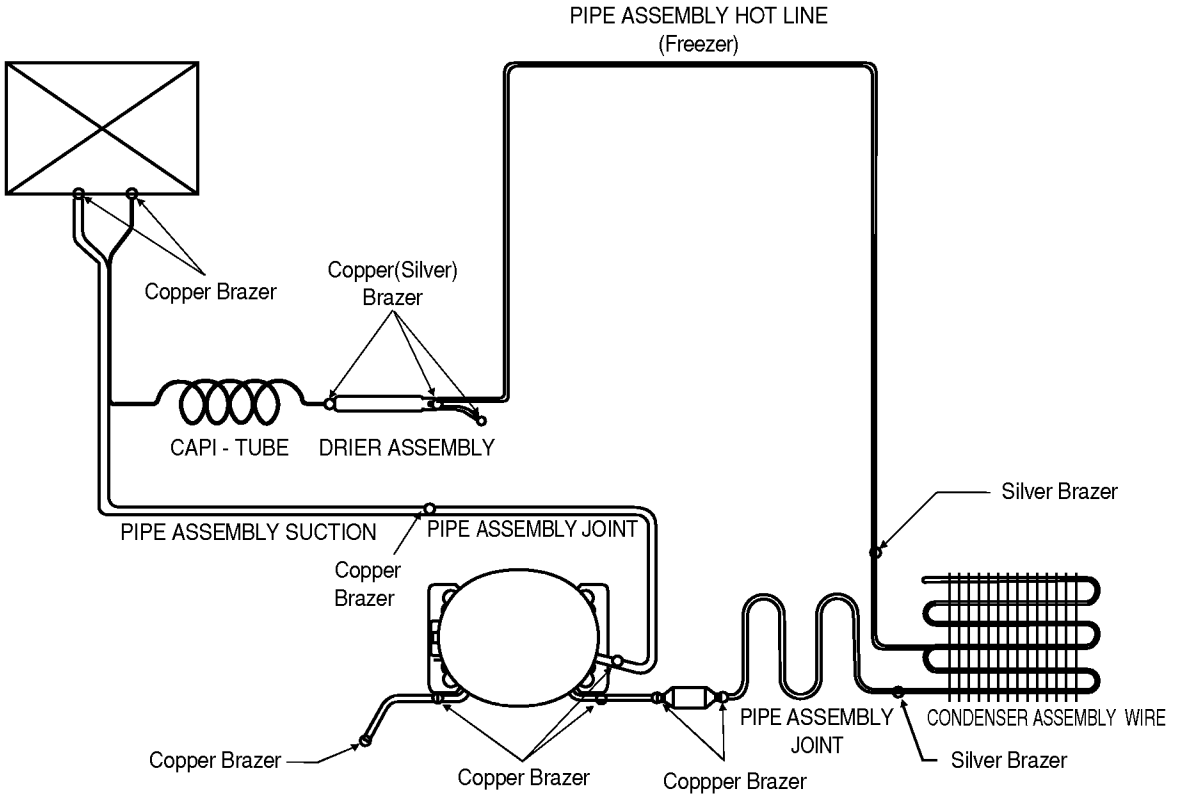

TROUBLE DIAGNOSIS

4. HOW TO DEAL WITH CLAIMS

4-1. Sound

Problems	Checks and Measures
"Whizz" sounds	■ **Explain general principles of sounds.** • All refrigerator when functioning properly have normal operating sound. The compressor and fan produce sounds. There is a fan in the freezer compartment which blows cool air to freezer and refrigerator compartments. "Whizz" sounds are heard when the air passes through the narrow holes into the freezer and refrigerator compartments. ■ **Cooling Fan sound in the compressor compartment.** • There is a fan on the back of the refrigerator, which cools the compressor compartment. If there is a small space between the refrigerator and the wall, the air circulation sounds may be noticeable. ■ **Noise of Compressor.** • This operating sound happens when the compressor compresses the refrigerant. The compressor rotates at 3600RPM. The sound of compressor operation becomes louder as the refrigerator capacity increases.
"Click" sounds	■ **Explain the principles of temperature change.** • The sounds happens when pipes and internal evaporator in the refrigerator compartment expand and contract as the temperature changes during the refrigerator operation. This sound also happens during defrosting, twice a day, when the ice on the evaporator melts.
"Clunk" sound	■ **Explain that it comes from the compressor when the refrigerator starts.** • When the refrigerator operates, the piston and motor in the compressor rotate at 3600RPM. This sound is caused by the vibration of motor and piston when they start and finish their operation. This phenomena can be compared with that of cars. When the car engine ignites and starts to rotate, the loud sound becomes gradually quiet. When the engine stops, it stops with vibration.
Vibration sound	■ **Check the sound whether it comes from the pipes vibration and friction.** • Insert rubber or leave a space between pipes to avoid the noise. • Fix the fan blade if the noise is due to the collision of fan and shroud. • Fix the drip tray if it is loosened. ■ **Sound depends on the installation location.** • Sound becomes louder if the refrigerator is installed on a wooden floor or near a wooden wall. Move it to the another location. • If the refrigerator is not leveled properly, a small vibration can make a loud sound. Please adjust the level of the refrigerator.

TROUBLE DIAGNOSIS

Problems	Checks and Measures
Sounds of water flowing	■ **Explain the flow of refrigerant.** • When the refrigerator stops, the water flowing sound happens. This sound happens when the liquid or vapor refrigerant flows from the evaporator to compressor.
"Click" sounds	■ **Explain the characteriistics of moving parts.** • This noise comes from the MICOM controller's switch on the top of the refrigerator when it is turned on and off.
Noise of ice maker operation (applicable to model with ice maker). - Noise produced by ice dropping and hitting ice bank. - Noise from motor sounds "Whizz".	■ **Explain the procedure and principles of ice maker operation.** • Automatic ice maker repeats the cycle of water supplying → icemaking → ice ejection. When water is supplied, the water supply valve in the machine room makes sounds like "Whizz" and water flowing also makes sound. When water freezes to ice, freezing sounds such as "click, click" are heard. When ice is being ejected, sounds like "Whizz" produced by a motor to rotate an ice tray and ice dropping and hitting ice bank sounds are also heard.
Noise when supplying water.	■ **Explain the principles of water supplied to dispenser.** • When the water supply button in the dispenser is pressed, the water supply valve in the compressor compartment opens and let the water flow to the water tank in the lower part of the refrigerator compartment. The water is dispensed by this pressure. When this happens, motor sound and water flowing sound are heard.
Noise when supplying ice.	■ Explain the principles of ice supply and procedure of crushed ice making in a dispenser. • When ice cube button is pressed, ice stored in the ice bank is moved by a Helix Pusher and dispensed. If crushed ice button is pressed, the cube ice is crushed. When this happens, ice crushing and hitting ice bank sounds are heard.

TROUBLE DIAGNOSIS

4-2. Measures for Symptoms on Temperature

Problems	Checks and Measures
Refrigeration is weak.	■ **Check temperature set in the temperature control knob.** • Refrigerator is generally delivered with the button set at "normal use" (MID). But customer can adjust the temperature set depending on their habit and taste. If you feel the refrigeration is weak, then set the temperature control button at "strong" position. If you adjust the button in the freezer compartment as well, the refrigeration is stronger than adjusting refrigerator only.
The food in the chilled drawer is . not frozen but defrosted	■ **The chilled drawer does not freeze food.** • Use chilled drawer for storing fresh meat or fish for short periods. For storing for a long periods or freezing food, use a freezer compartment. It is normal that frozen foods thaw above the freezing temperature (in the chilled drawer).
Refrigerator water is not cool.	■ **Check the water storage location.** • If water is kept in the door rack, please ask to keep it in the refrigerator compartment shelf. It will then become cooler.
Ice cream softens.	■ **Explain the characteristics of ice cream.** • The freezing point of ice cream is below -15°C. Therefore ice cream may melt if it is stored in the door rack. • Store ice cream in a cold place or set the temperature control button of a freezer at "strong" position.
Refrigeration is too strong.	■ **Check the position of temperature control button.** • Check if refrigeration is strong in whole area of the refrigerator or partly near the outlet of the cooling air. If it is strong in whole area, set the control button at "weak". If it is strong only near the outlet of cool air, keep food (particularly wet and easy to frozen such as bean curd and vegetables) away from the outlet.
Vegetables are frozen.	■ **Check the vegetables storage.** • If vegetables are stored in the refrigerator shelf or chilled drawer instead of vegetable drawer, they will be frozen. Set the control button at "weak" if they are also frozen in the vegetable drawer.
The food stored at inside of the shelf freezes even the control button is set at "MID".	■ **Check if food is stored near the outlet of the cooling air.** • The temperature at cooling air outlet is always below the freezing point. Do not store food near the outlet of the cooling air as it block the air circulation. And do not block the outlet. If the outlet of the cooling air is blocked, the refrigerator compartment will not be cooled.

TROUBLE DIAGNOSIS

4-3. Odor and Frost

Problems	Checks and Measures
Odor in the refrigerator compartment.	■ **Explain the basic principles of food odor.** • Each food has its own peculiar odor. Therefore it is impossible to prevent or avoid food odor completely when food is stored in the completely sealed refrigerator compartment. Deodorizer can absorb some portions of the odor but not completely. The intensity of odor depends on refrigerator conditions and environments. ■ **Check the temperature control button and set at "strong".** • Clean inside of the refrigerator with detergent and remove moisture. Dry inside the refrigerator by opening the door for about 3 or 4 hours and then set the temperature control button at "strong".
Frost in the freezer compartment	■ **Explain the basic principles of frost formation.** • The main causes for frosting: - Door was left open. - Air penetration through the gasket - Too frequent door opening. (parties. etc.) - Hot foods are stored before they are cooled down. The temperature of freezer is -19°C. if temperature is set at "MID". If hot air comes into the refrigerator, fine frost forms as cold air mixes with hot air. If this happens quite often, much frost forms inside of the refrigerator. If the door is left open in Summer, ice may form inside of the refrigerator.
Frost in ice tray.	■ **Explain basic principles of frost formation.** • When ice tray with full of water is put into a freezer compartment, the water evaporates. If cool air fan operates, the moisture attached to the jaw (protruded part) of ice mold shall freeze and form frost. If warm water was put into the ice mold, the situation will become worse.

TROUBLE DIAGNOSIS

4-5. Others

Problems	Checks and Measures
The refrigerator case is hot.	■ Explain the principles of radiator. • The radiator pipes are installed in the refrigerator case and partition plate between the refrigerator and the freezer compartment in order to prevent condensation formation. Particularly in summer or after installation of refrigerator, it may feel hot but it is normal. If there is no enough space to dissipate heat, it can be hotter due to lack of heat radiation. Please install a refrigerator in a well-ventilated place and leave a clearance between refrigerator and wall:
Small holes in a door liner	■ Explain that the hole is for releasing gas. • A small hole in the door liner is for releasing gas during insulation materials lining work. With a releasing hole, forming can be easily done .
Electric bills are too much.	■ Check the use conditions. • Too frequent door opening and hot food storing cause the compressor to operate continuously and hence increase the electric consumption and bills.
Condensation on the inside wall of the refrigerator compartment and the cover of properly vegetable drawer.	■ Explain how to store foods • Condensation forms when refrigerator is installed at damp area, door is frequently opened, and wet foods are not stored in the air tight container or wrapped. Be sure to store wet foods in the air tight container or in the wrap.
When is the power connected?	■ When should the power be connected ? • You can connect the power right after the installation. But if the refrigerator was laid flat during transportation for a long period of time and the refrigerant and compressor oils are mixed up, then this will affect badly the performance of a refrigerator. Be sure to connect the power 2~3 hours after refrigerator is installed.
Door does not open properly. 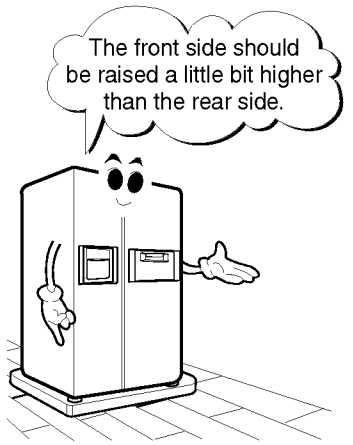 	■ Refrigerator compartment door does not open properly. • When the door is open, warm open air comes into the compartment and is mixed up with cool air. This mixed air shall be compressed and increase the internal pressure when door is closed. This causes the door sticked closely to the refrigerator in a moment. (If the refrigerator is used for a long time, it will then open smoothly.) ■ When the refrigerator compartment door is open and close, the freezer compartment door moves up and down. • When the refrigerator compartment door is open and close, fresh air comes into the freezer compartment and moves up and down the freezer compartment door. ■ Door opens too easily. • There is a magnet in the gasket rubber so that it is ok. if door is securely closed without a gap. It can be open easily if the foods in the refrigerator or freezer compartments hold the door open. ■ A door does not close properly. • If the rear side of the refrigerator is raised higher than front side, door shall not be easily closed. Adjust the level of refrigerator with levelling screws.

HOW TO DISASSEMBLE AND ASSEMBLE

1. DOOR

1) Remove lower cover and then disconnect water supply tube in the lower part of freezer door.

• Pull a water supply tube ② forward while pressing ① part to disconnect water supply tube as shown below.

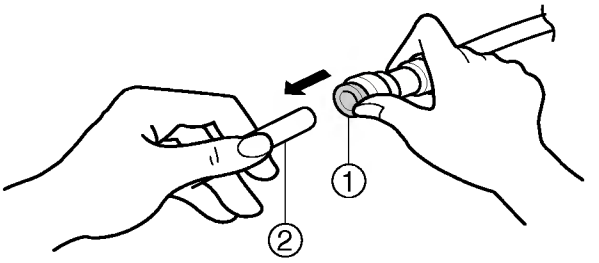

2) Remove a freezer door.

(1) Loosen hinge cover screw of freezer door and remove cover.
Disconnect all connecting lines except earthing cord.

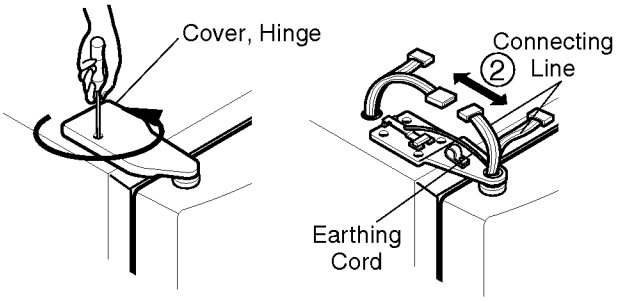

(2) Turn hinge lever in arrow Ⓐ direction until it is loosened and take it out in arrow Ⓑ direction.

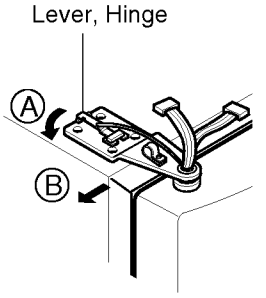

Note : • *When disconnecting refrigerator door, turn hinge lever counterclockwise.*
• *If hinge lever or bracket hinge pin is deformed during assembling freezer and refrigerator doors, fix two screws (Tap Tite Screw, M6: Hinge, L fixing screw) in the hole of upper hinge.*

(3) Disconnect upper hinge ① from a hinge supporter ② by grasping the front part of upper hinge and lifting up (Hinge Assembly U) in arrow direction Ⓐ and pull forward in arrow Ⓑ direction. Be careful as the door may be fallen down.

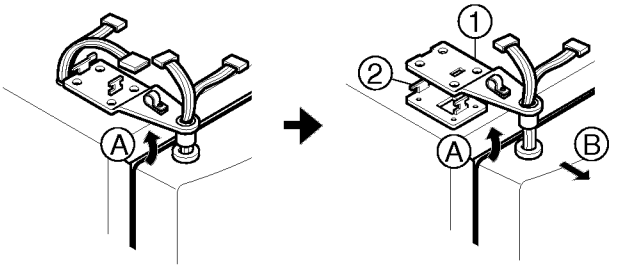

(4) Lift up the freezer door ① in arrow direction and disconnect the door from the lower hinge ②. Don't pull a door forward.

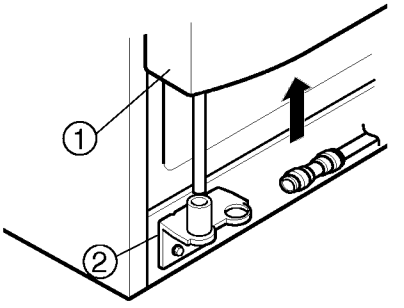

Note : • *Lift up a freezer door until a water supply tube is fully taken out.*

(5) Assembly is the reverse order of disassembly

HOW TO DISASSEMBLE AND ASSEMBLE

2. HANDLE

1) Put blade screwdriver into a groove on the side of a Deco handle and lift up a little bit in arrow ① direction and push up with hand in arrow ② direction and disconnect.

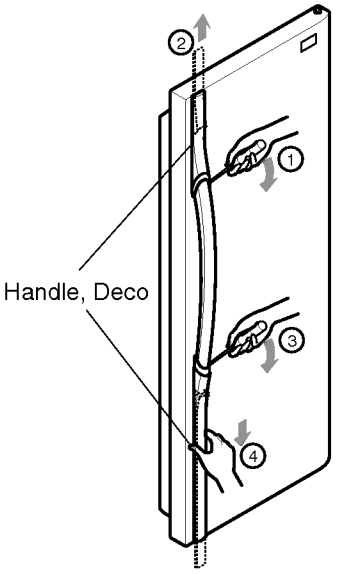

2) Put blade screwdriver into a groove on the side of a DECO handle and lift up in arrow direction ③ and push down with hand in arrow direction ④ and disconnect.
3) Push up a piece handle ③ in arrow direction with hand and disconnect.
4) Turn screw in arrow direction with a cross driver and disconnect.

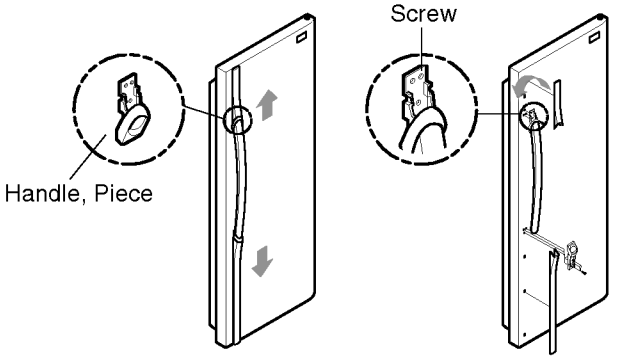

3. SHROUD, GRILLE FAN

1) Loosen two screws after disconnecting a cap screw of a grille fan(U) with a balde screwdriver.
2) Disassembly of a grille fan(U) : Pull forward after opening hook at → part with a blade screwdriver.
3) Disconnect housing Ⓐ of a grille fan (L) from the main body.
4) Disassembly of a grille fan (L) : Hold upper part of a grille fan(L) and pull forward carefully.
5) Loosen two screws.
6) Disassembly of shroud. F(U) : Disconnect housing of B after removing two rail guides with a blade screwdriver.
7) Disassembly of shroud. F(U) : Hold upper part and pull forward.
8) Check foam PU sticking conditions around a shroud, F(U) and F(L) during assembling. If damaged, torn or badly sticked, assemble with a new one after sealing well.

4. ICEMAKER ASSEMBLY

1. Dispenser Model

1) How to disassemble:
   (1) Remove ice bank from the freezer compartment.
   (2) Loosen two screws on the upper part of icemaker bracket.
   (3) Disconnect icemaker bracket so that it can slide forward.
   (4) Disconnect icemaker housing and sensor housing.
   (5) Disconnect icemaker horizontally by pressing bracket hook part. (Don't disassemble further. The set value may be changed.)
2) How to assemble : The assembly is the reverse order of the above disassembly.

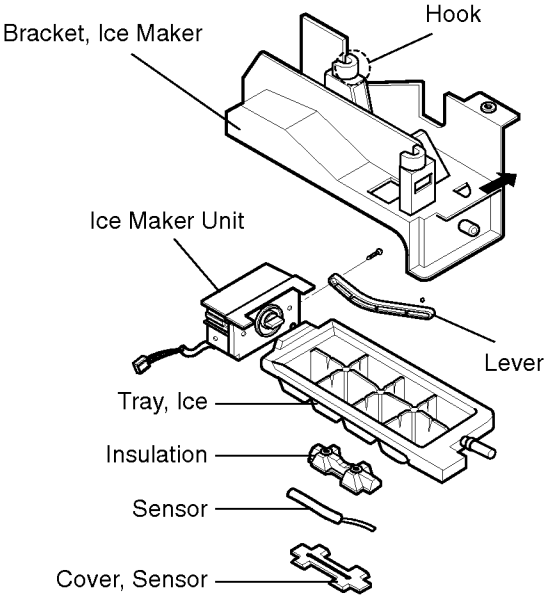

Note : *When the ice tray is not horizontal after assembly, assembly must be wrong. Check and assemble again.*

HOW TO DISASSEMBLE AND ASSEMBLE

5. DISPENSER

1) Disconnect button assembly by pulling down until it stops and then pulling forward.

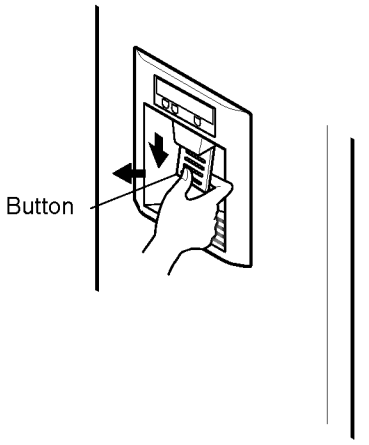

2) Remove display frame Assembly by making a gap between a display frame Assembly. and funnel Assembly. with a balde screwdriver and pulling it forward. The cover dispenser is fixed with a hook.

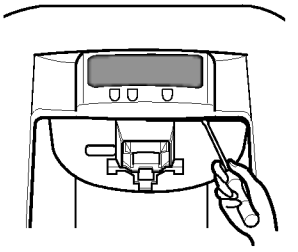

3) Display Assembly can be disconnected by pressing the upper part of a cover dispenser and pushing a display Assembly. after disconnecting display frame Assembly. housing.

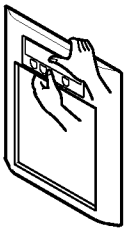

4) Loosen four screws with a phillips screwdriver and pull a funnel Assembly to disconnect.

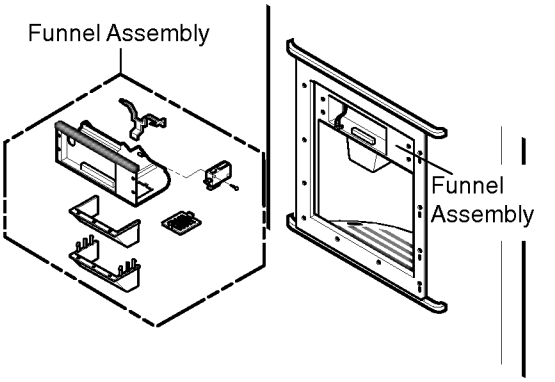

5) Duct cap Assembly is disconnected if hold lever connecting screw is loosened with a phillips screwdriver.

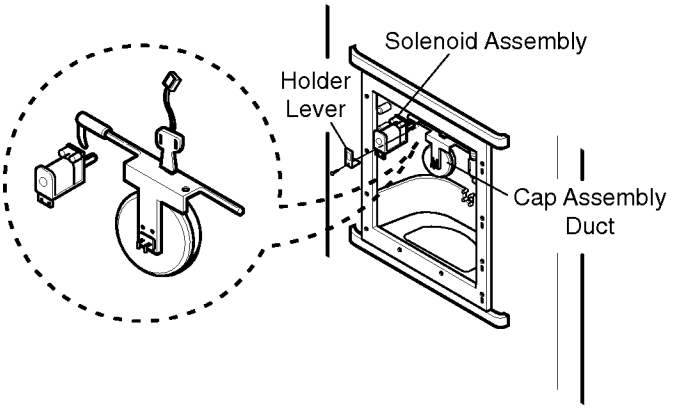

6) For assembling a duct cap Assembly., insert one end of a spring into the right hole of dispenser lever, and insert the other end into the right hole in upper part of dispenser. And then assemble a holder lever after fixing a holder at a solenoid Assembly working part.

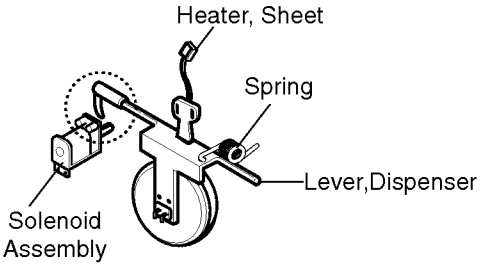

HOW TO DISASSEMBLE AND ASSEMBLE

7) Dispenser Related Parts

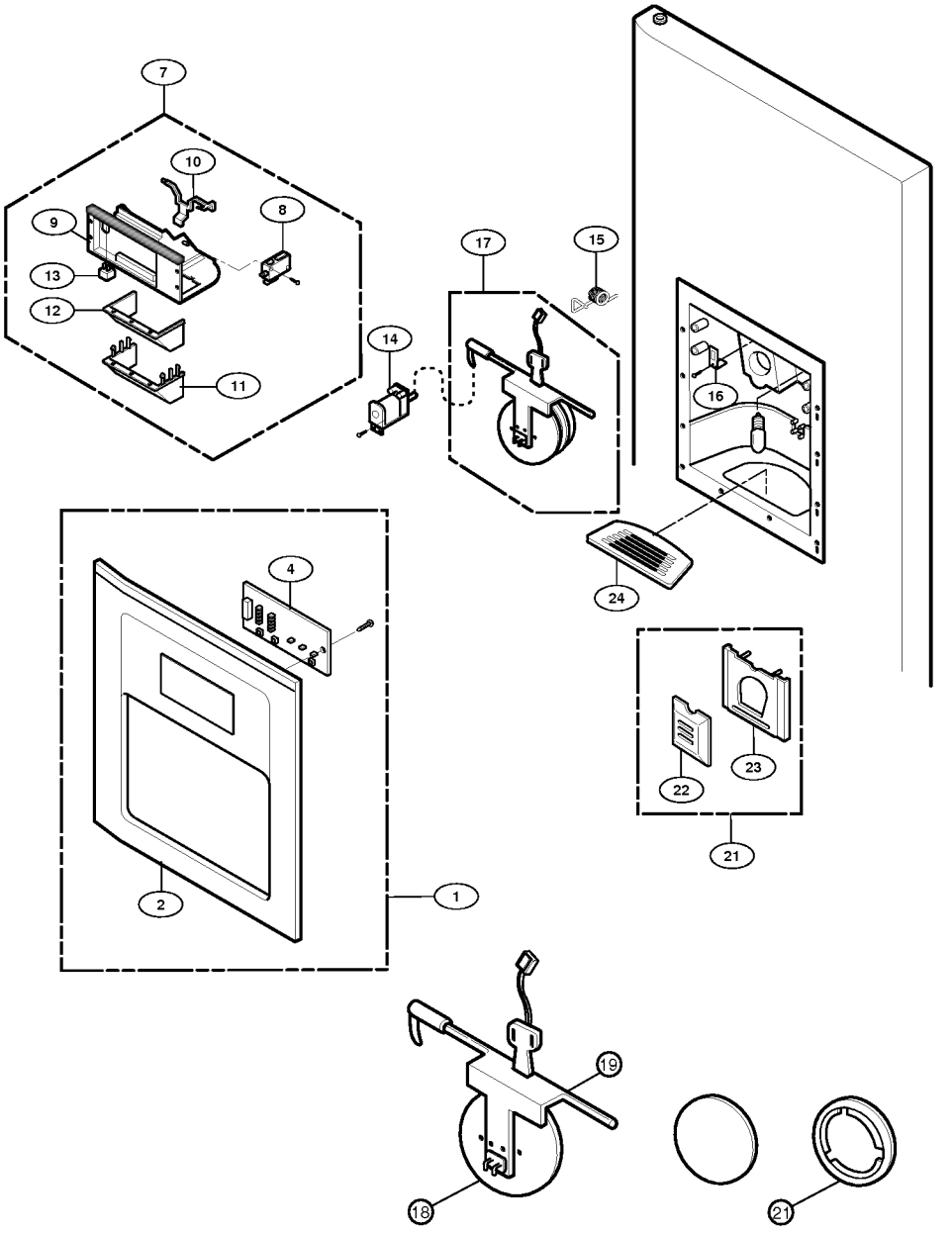

1	FRAME ASSEMBLY, DISPLAY
2	COVER, DISPENSER
4	PWB(PCB) ASSEMBLY, DISPLAY
7	FUNNEL ASSEMBLY
8	SWITCH, MICRO
9	FRAME, FUNNEL
10	LEVER(SWITCH)
11	FUNNEL
12	RUBBER, FUNNEL
13	SWITCH, ROCKER
14	SOLENOID ASSEMBLY
15	SPRING
16	HOLDER, LEVER
17	CAP, DUCT
19	LEVER, DISPENSER
20	RUBBER, CAP
21	BUTTON ASSEMBLY
22	BUTTON
23	HOLDER, BUTTON
24	DECO, DRAIN

<⑰ Cap Assembly, Duct Detailed Drawings>

HOW TO DISASSEMBLE AND ASSEMBLE

6. WATER TANK AND WATER LINE

▶ The water tank at back and lower part of a refrigerator is fixed by one screw and has a capacity containing 7 glasses (180cc per glass) of cold water. It will take time to make more cold water in the tank.

* The first portion of dispensed water is not cold even though the refrigerator is working. In this case, dispense ice first in the cup and then water to make a cold water.

7. HOME BAR

7-1. Home Bar related parts

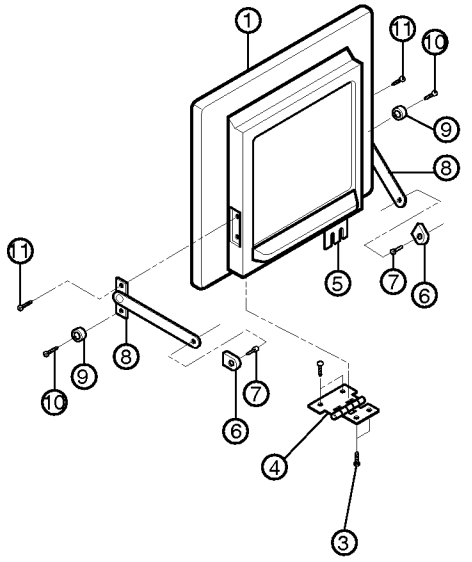

1 DOOR ASSEMBLY, H/BAR	7 SCREW TAP TITE(ARM)
2 SEREW, TAP TITE(HINGE-H/B)	8 ARM ASSEMBLY
3 SCREW MACHINE(HINGE-H/B)	9 STOPPER
4 HINGE ASSEMBLY H/BAR	10 SCREW, MACHINE(STOP ARM-H/B)
5 HINGE ASSEMBLY H/BAR	11 SCREW MACHINE(HINGE-H/B)
6 CAP, ARM	

7-2. Home Bar parts disassembly and assembly

1) Disconnect H/Bar Door Assembly ①.
2) Loosen two screws ⑦ attached on the refrigerator compartment door with a phillips screwdriver. And loosen 4 screws ② and two screws ③. Pull H/Bar door Assembly ①. forward to disassemble.
3) Loosen two screws ⑩, ⑨ fixed on H/Bar door Assembly. and two screws ⑪ with a cross driver to disassemble arm Assembly.
4) Assemble parts by performing the disassembly in reverse order.

Note : • *Assemble carefully parts ⑦, ⑩, ⑪ until they are fixed firmly when assembling them.*
• *Adjust exterior gap by adjusting parts ②, ⑦ and when assembling.*

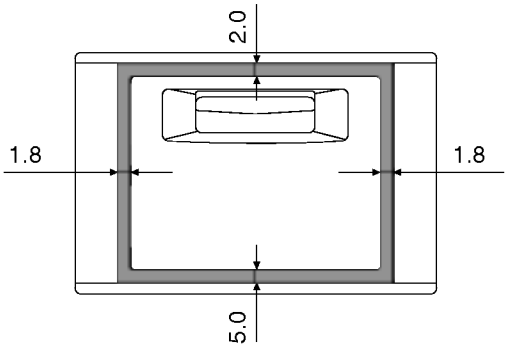

EXPLODED VIEW

FREEZER DOOR PART: GR-P247, GR-P207, GR-L247, GR-L207, GR-L197

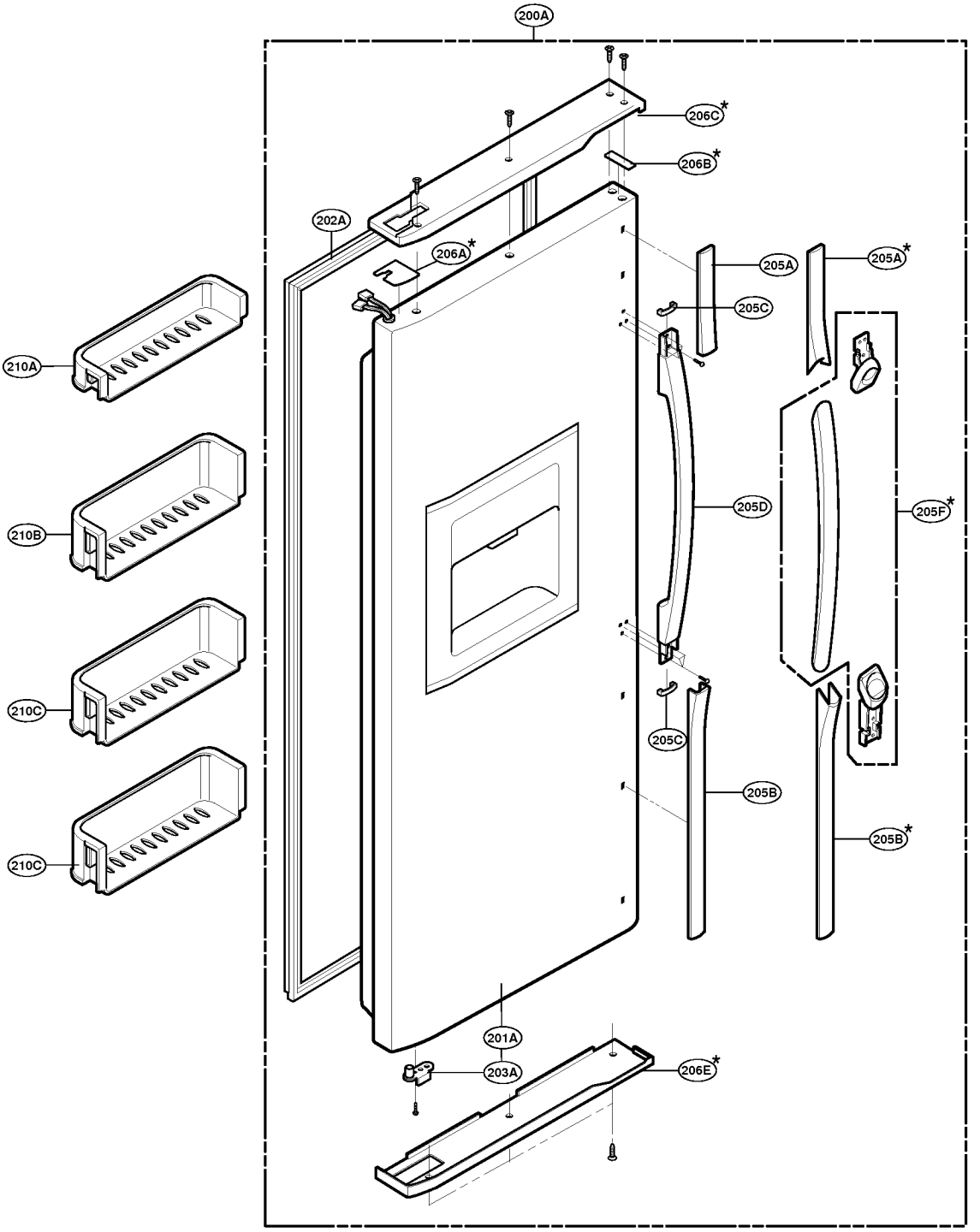

EXPLODED VIEW

FREEZER DOOR PART: GR-C247, GR-C207, GR-B247, GR-B207, GR-B197

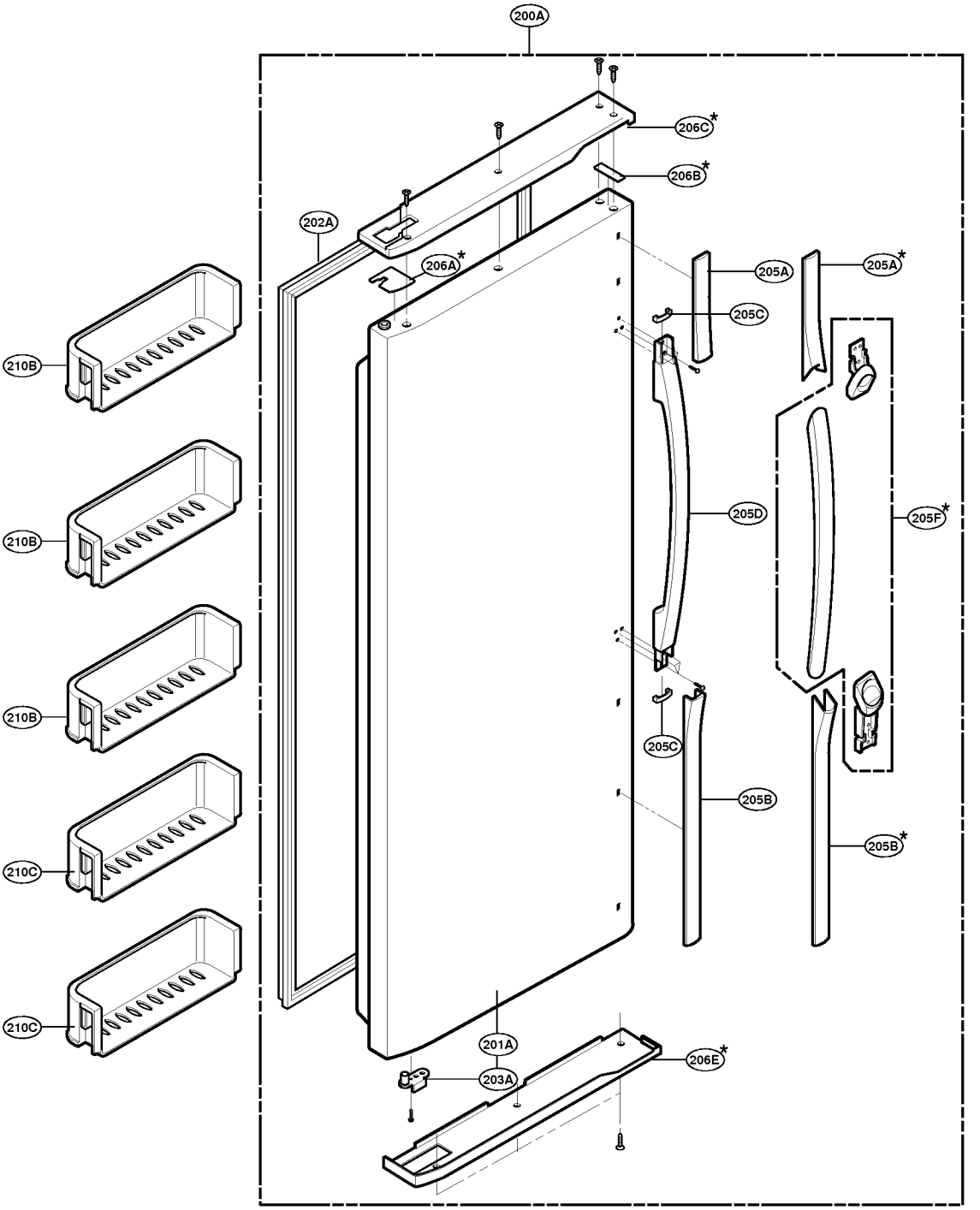

EXPLODED VIEW

Ref No. : GR-P247, GR-P207, GR-C247, GR-C207

REFRIGERATOR DOOR PART

* : Optional part

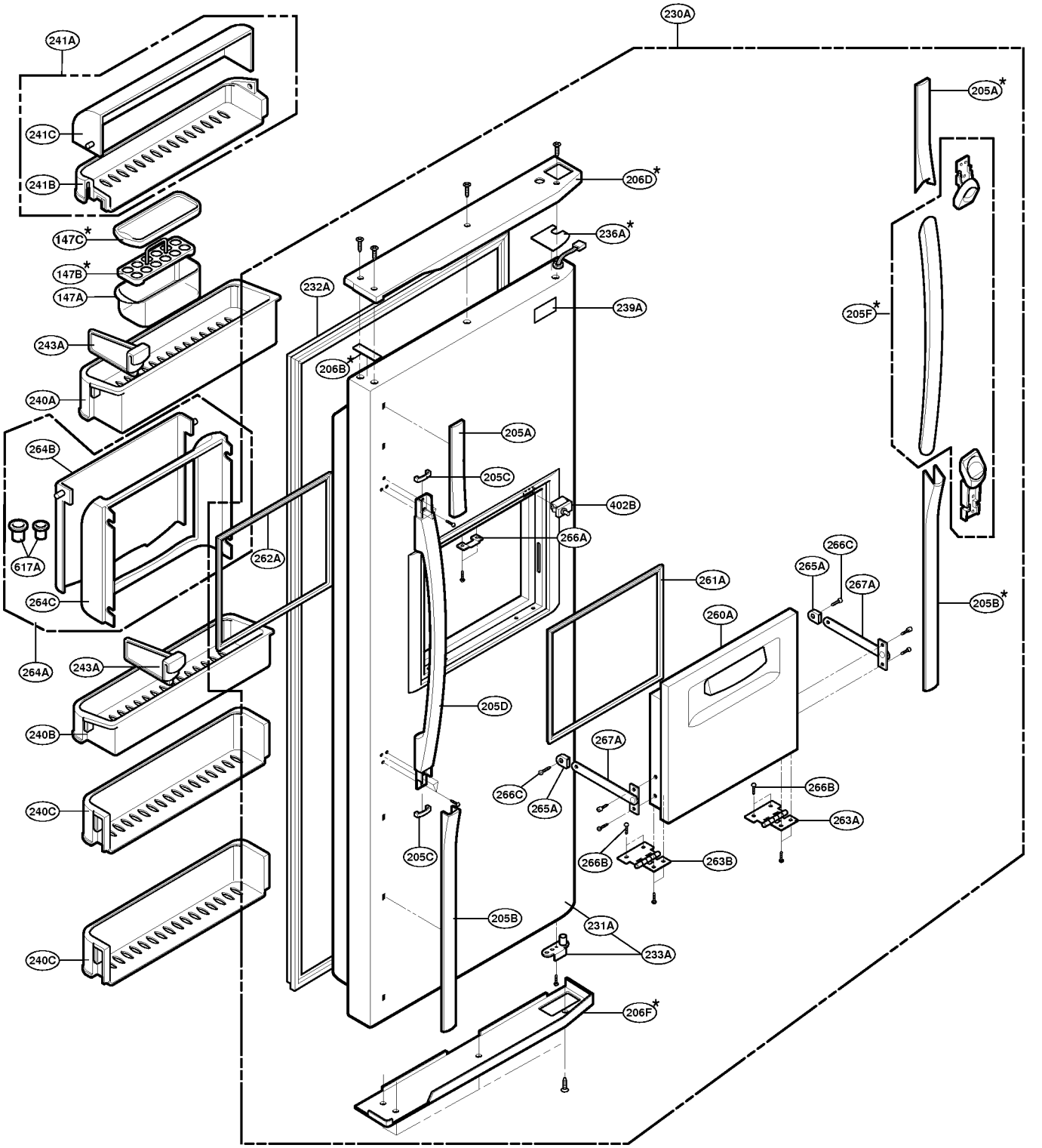

EXPLODED VIEW

Ref No. : GR-L247, GR-L207, GR-L197, GR-B247, GR-B207, GR-B197

REFRIGERATOR DOOR PART

*** : Optional part**

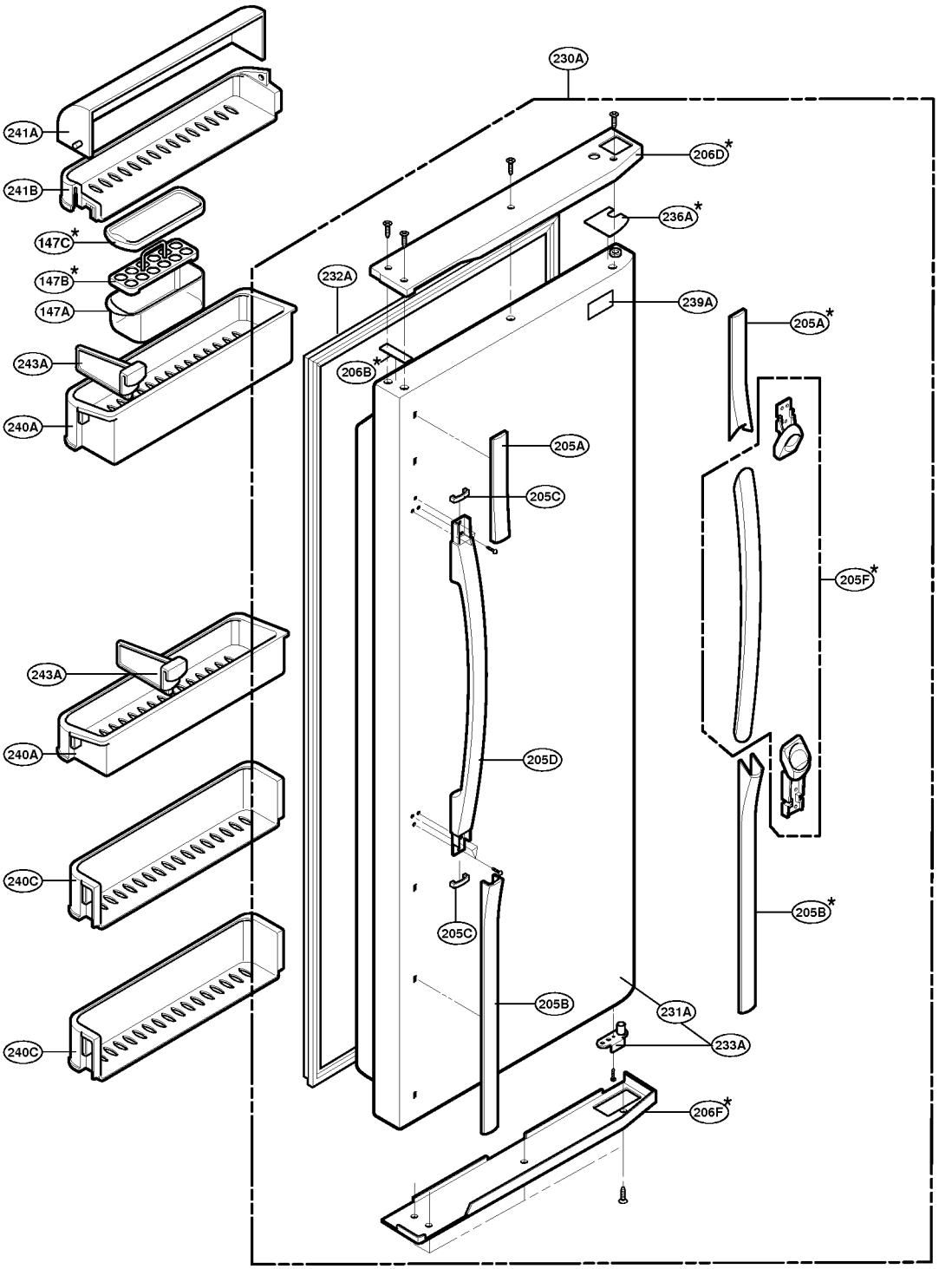

EXPLODED VIEW

FREEZER COMPARTMENT

*** : Optional part**

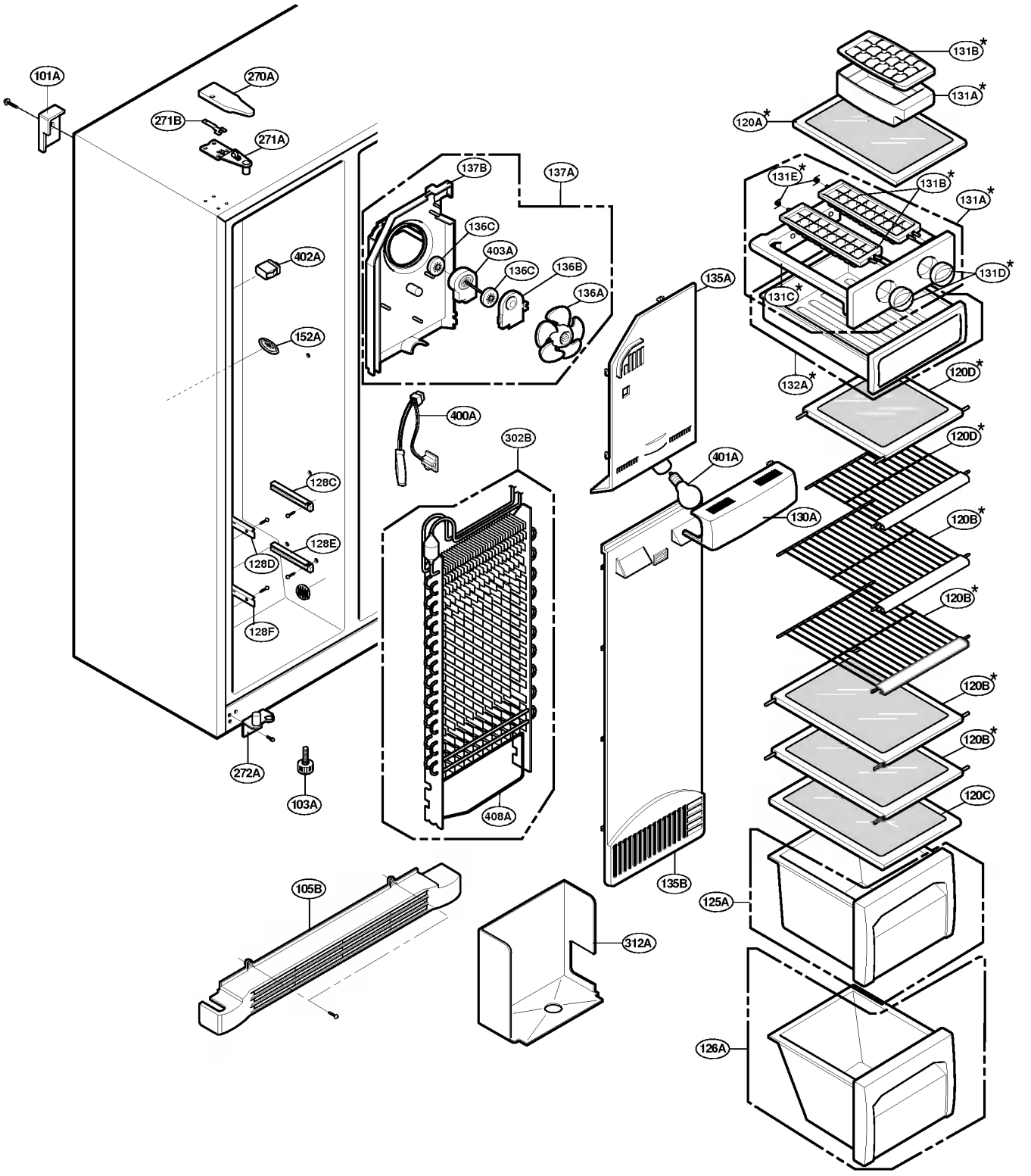

EXPLODED VIEW

REFRIGERATOR COMPARTMENT

* : Optional part

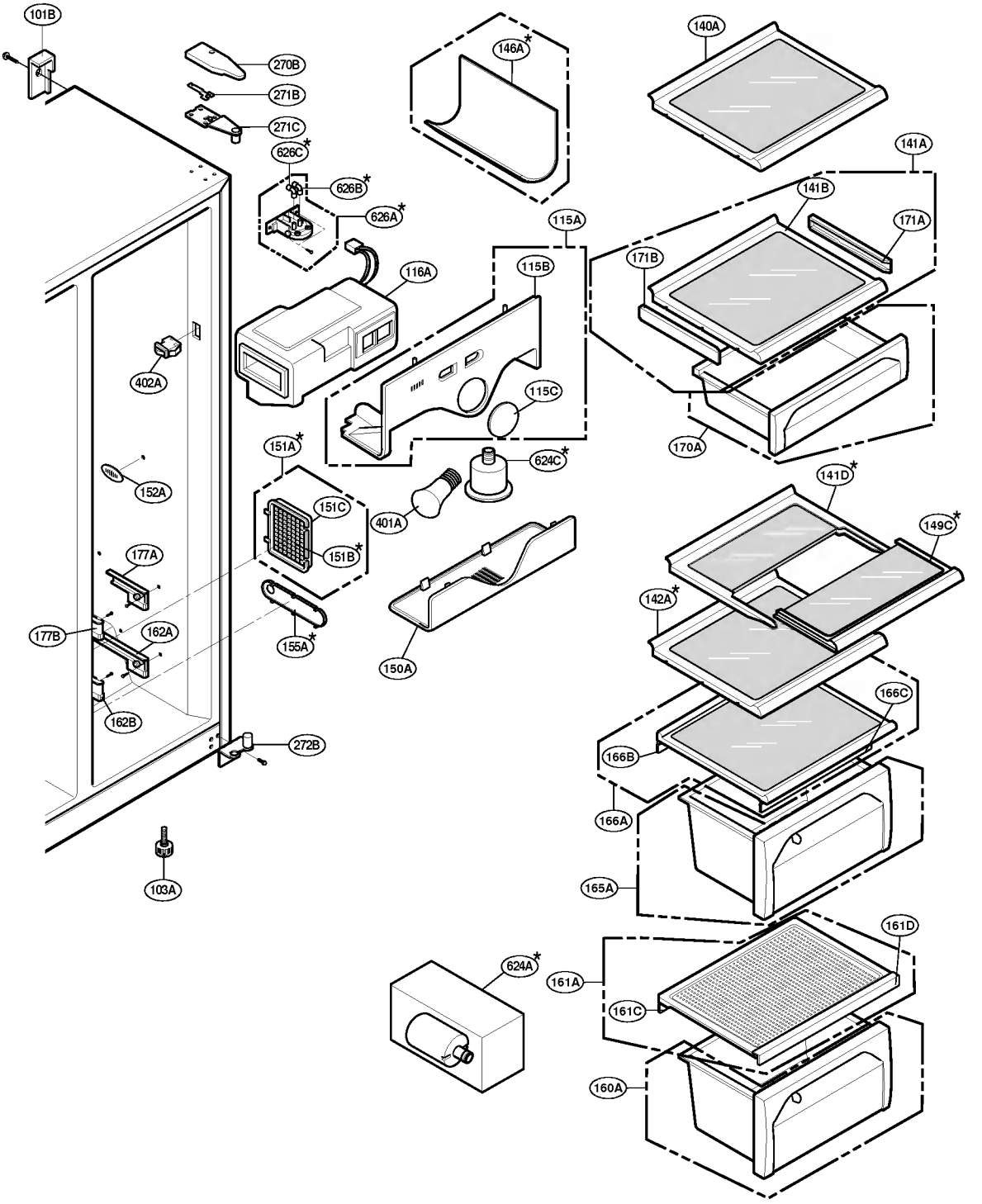

EXPLODED VIEW

ICE & WATER PART

* : Optional part

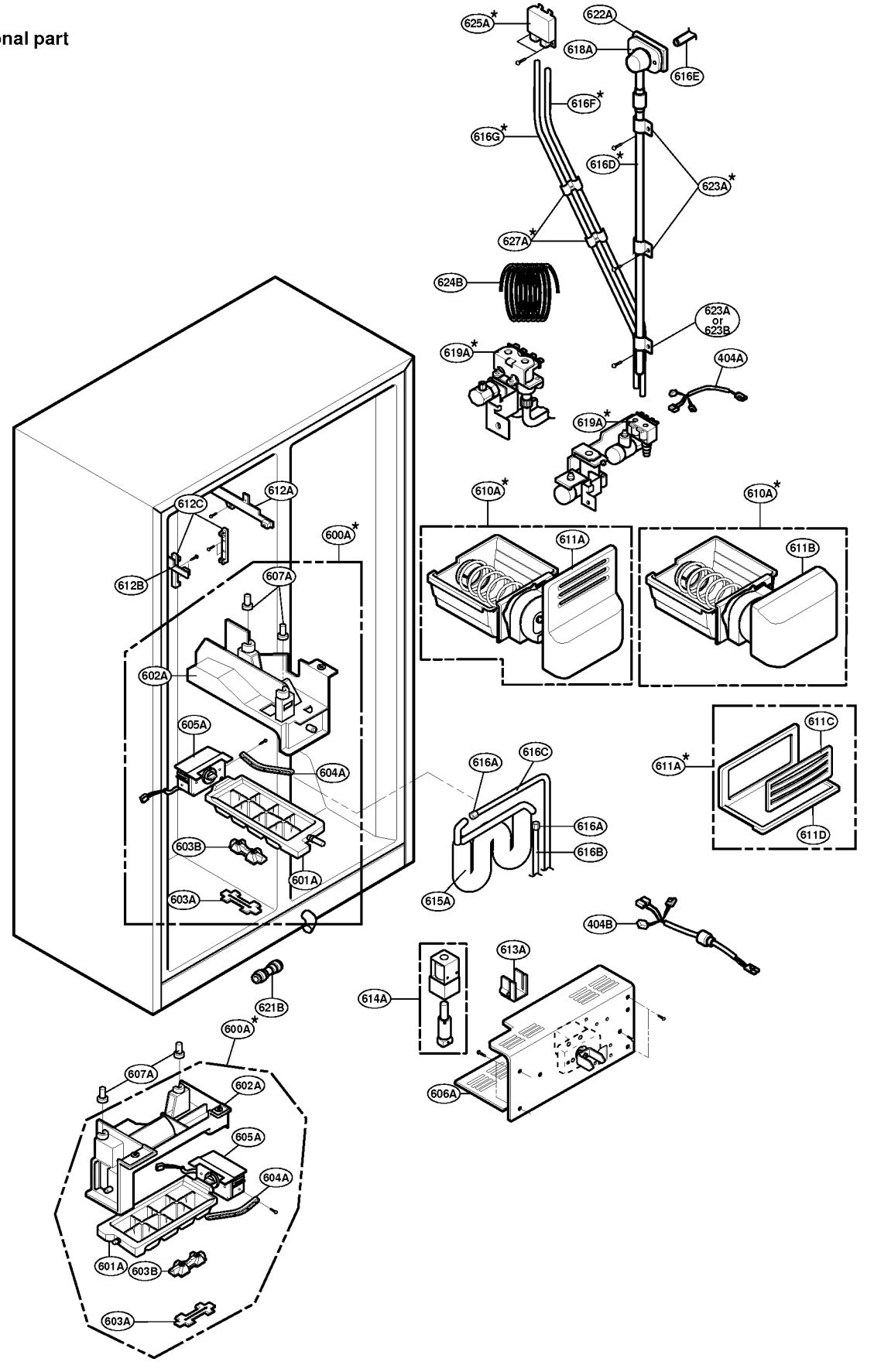

EXPLODED VIEW

MACHINE COMPARTMENT

* : Optional part

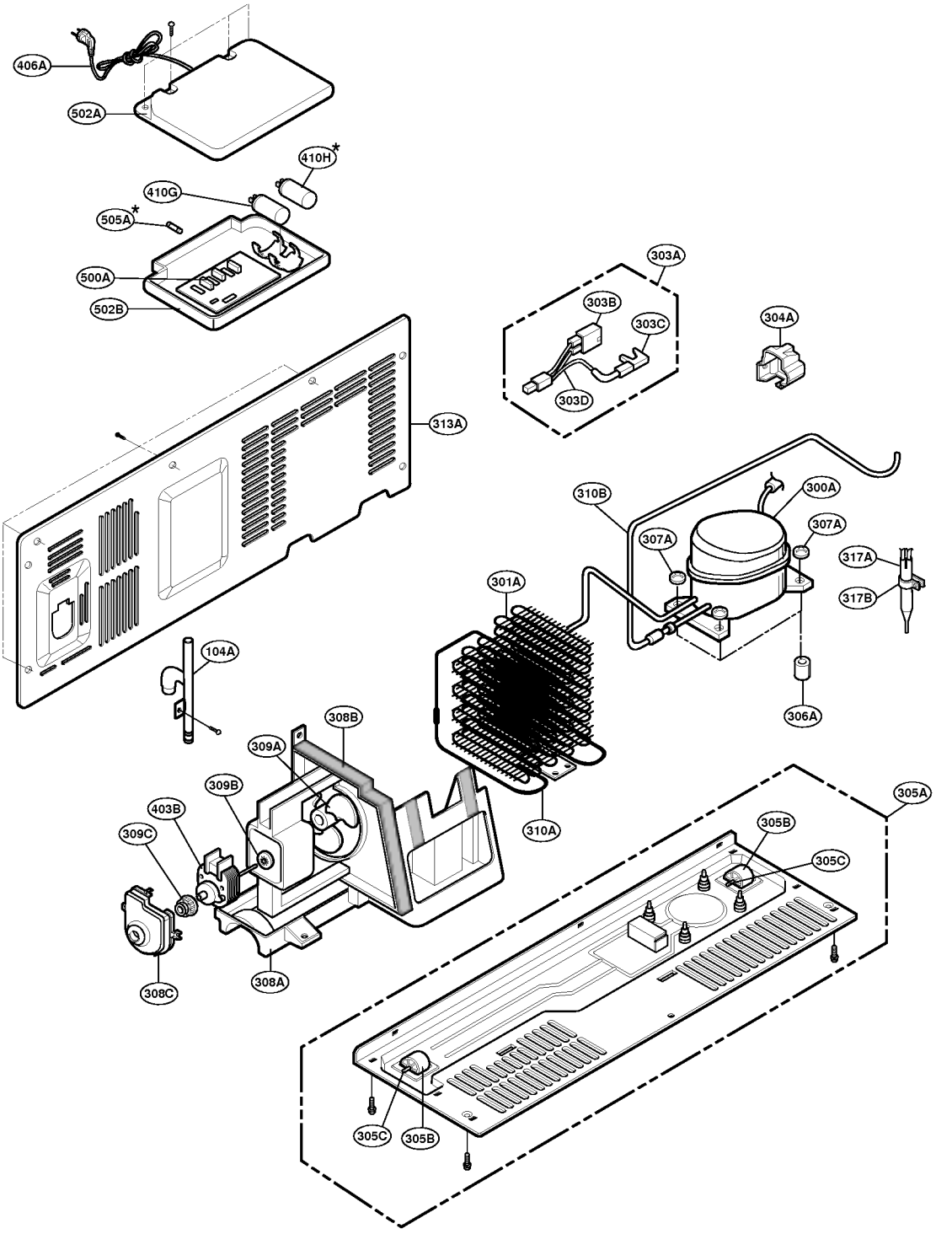

EXPLODED VIEW

DISPENSER PART

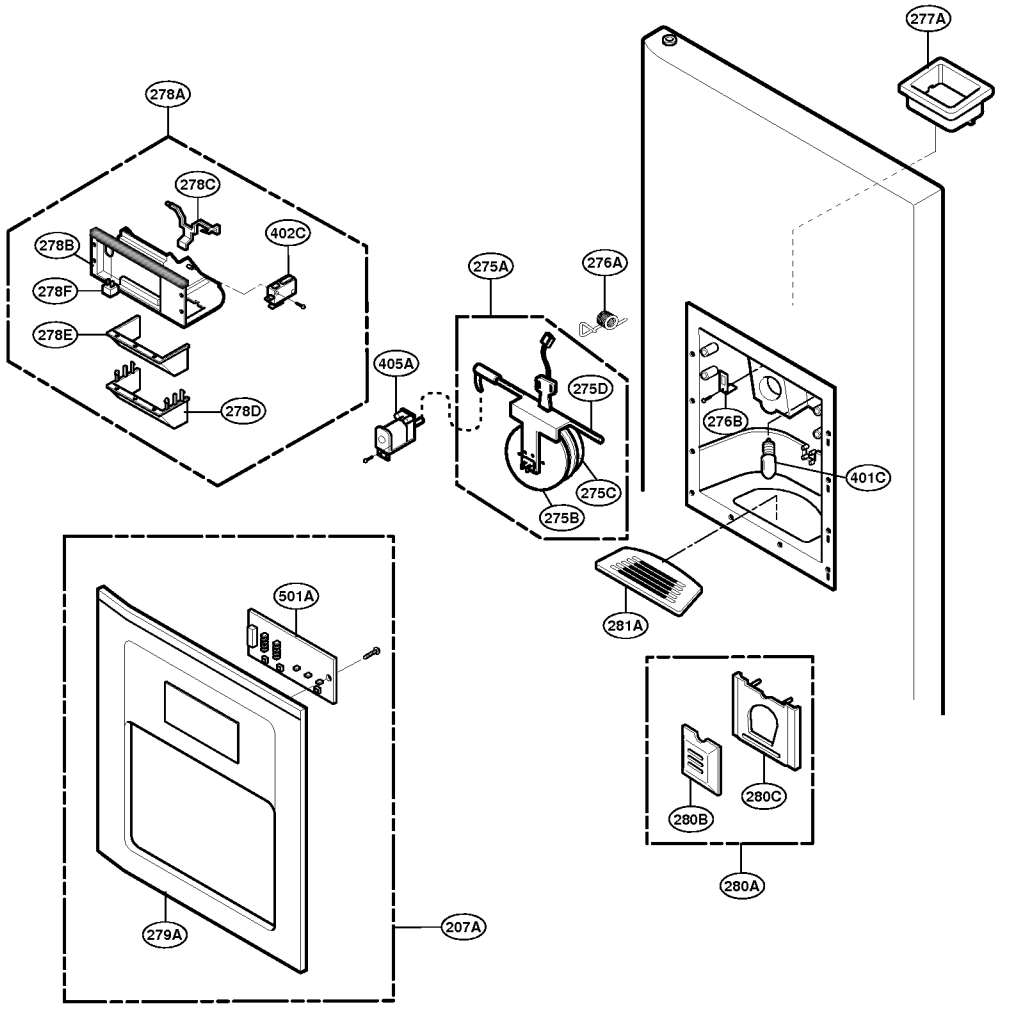



LG Electronics Inc.

P/No. 3828JD8545R

MAY., 2004 Printed in Korea