LG

DISHWASHER

OWNER'S MANUAL

MODEL : LD-14AW3

Please read this manual carefully before operating your dishwasher. Retain it for future reference.

CONTENTS

Dishwasher

SAFETY AND CAUTION	3
INSTALLATION INSTRUCTION	5
PARTS NAME	9
FUNCTION OF CONTROL BUTTON	10
HOW TO USE AND OPERATE	11
WASH OPTIONS	16
PROGRAMS	17
CHECK AND CARE	18
TROUBLE SHOOTING GUIDE	19
SPECIFICATIONS	

SAFETY AND CAUTION

⚠ WARNING - When using your dishwasher, follow basic precautions, including the following:

- Please read this manual carefully before using the dishwasher for the first time.
- This manual contains very important notes regarding the installation, use and maintenance of your dishwasher.
- The manufacturer can not be responsible for problems caused by ignoring these safety and caution instructions.
- This dishwasher is designed for normal household use.
- Do not use the dishwasher for industrial and commercial use, or other purpose.
- The appliance is not intended for use by young children or infirm persons without supervision.

During installation

- Electrical connection must be in accordance with the rating label.
- Electrical safety is only guaranteed when the earth system of your house is in accordance with the related local regulations.(Do not use an extension cable or cord.)
- If the hot water exceeds 65℃, adjust the water heater setting. If the hot water temperature can not be maintained below 65℃, the dishwasher must be connected to cold water.
- If power supply cord is damaged, it must only be replaced by the manufacturer or its service agent or a similar qualified person in order to avoid a hazard.
- This appliance must be positioned so that the plug is accessible.
- The appliance is to be connected to the water mains using new hose-sets and that old hose-sets should not be reused.

During use

- Only suitable household utensils should be placed in the dishwasher.
  (Please avoid utensils; that are non-heatresistant, metal decorated, etc.)
- Do not use any kinds of solvent in your dishwasher. They may cause an explosion or fire.
- Do not spray water on the appliance.
  It may cause the failure of electric parts or electric shock.
- Do not push down or sit on the inner door when the door opened. It may cause the deformation or failure of your dishwasher.
- Do not use the detergent for hand washing.
  The detergent for dishwasher should be used for normal operation.
- This appliance is fitted with a safety function that automatically stops the operation of the dishwasher when it is exposed to heavy disturbance on its mains.
- Do not insert anything such as coin into the vapor vent. It may cause the failure of mechanical parts and noise.
- Do not expose skin to vapor vent. During operation, as hot steam may scald.
- Dishwasher detergents are strongly alkaline. They can be extremely dangerous if swallowed. Avoid contact with skin and eyes and keep children away from the dishwasher when the door is open.
  Check that the detergent receptacle is empty after completion of the wash cycle.
- Some pre-treatment sprays or liquids can damage your dishwasher's control panel and plastic components, so do not use these products on or around your dishwasher.

SAFETY AND CAUTION

Child Safety

- Controls may be locked using "Child Lock" mode to prevent from all the setting from being changed by a child.
- Keep children away from detergents and rinse-aids.
- Do not allow children to operate the dishwasher.
- Young children should be supervised to ensure that they do not play with the appliance.

CAUTION concerning the Power Cord

- Most appliances recommend they be placed upon a dedicated circuit; that is, a single outlet circuit which powers only that appliance and has no additional outlets or branch circuits. Check the specification page of this owner's manual to be certain.
- Do not overload wall outlets. Overloaded wall outlets, loose or damaged wall outlets, extension cords, frayed power cords, or damaged or cracked wire insulation are dangerous. Any of these conditions could result in electric shock or fire. Periodically examine the cord of your appliance, and if its appearance indicates damage or deterioration, unplug it, discontinue use of the appliance, and have the cord replaced with an exact replacement part by an authorized servicer.
- Protect the power cord from physical or mechanical abuse, such as being twisted, kinked, pinched, closed in a door, or walked upon. Pay particular attention to plugs, wall outlets, and the point where the cord exits the appliance.

GROUNDING INSTRUCTIONS

This appliance must be grounded. In the event of a malfunction or breakdown, grounding will reduce the risk of electric shock by providing a path of least resistance for electric current. This appliance is equipped with a cord having an equipment-grounding conductor and a grounding plug. The plug must be plugged into an appropriate outlet that is installed and grounded in accordance with all local codes and ordinances.

WARNING - Improper connection of the equipment-grounding conductor can result in a risk of electric shock. Check with a qualified electrician or service representative if you are in doubt whether the appliance is properly grounded. Do not modify the plug provided with the appliance; if it will not fit the outlet have a proper outlet installed by a qualified electrician.

INSTALLATION INSTRUCTION

Step 1 :
PREPARE CUPBOARD OPENING

1 This dishwasher is designed to fit to the size shown as below.

2 Select a location as close to sink as possible for easy connections to water and drain lines.

3 The dishwasher should not be installed more than 3 meters from sink for proper drainage.

4 If dishwasher is to be installed in a corner, a minimum 5cm of space is required between the washer and an adjacent cabinet or a wall.

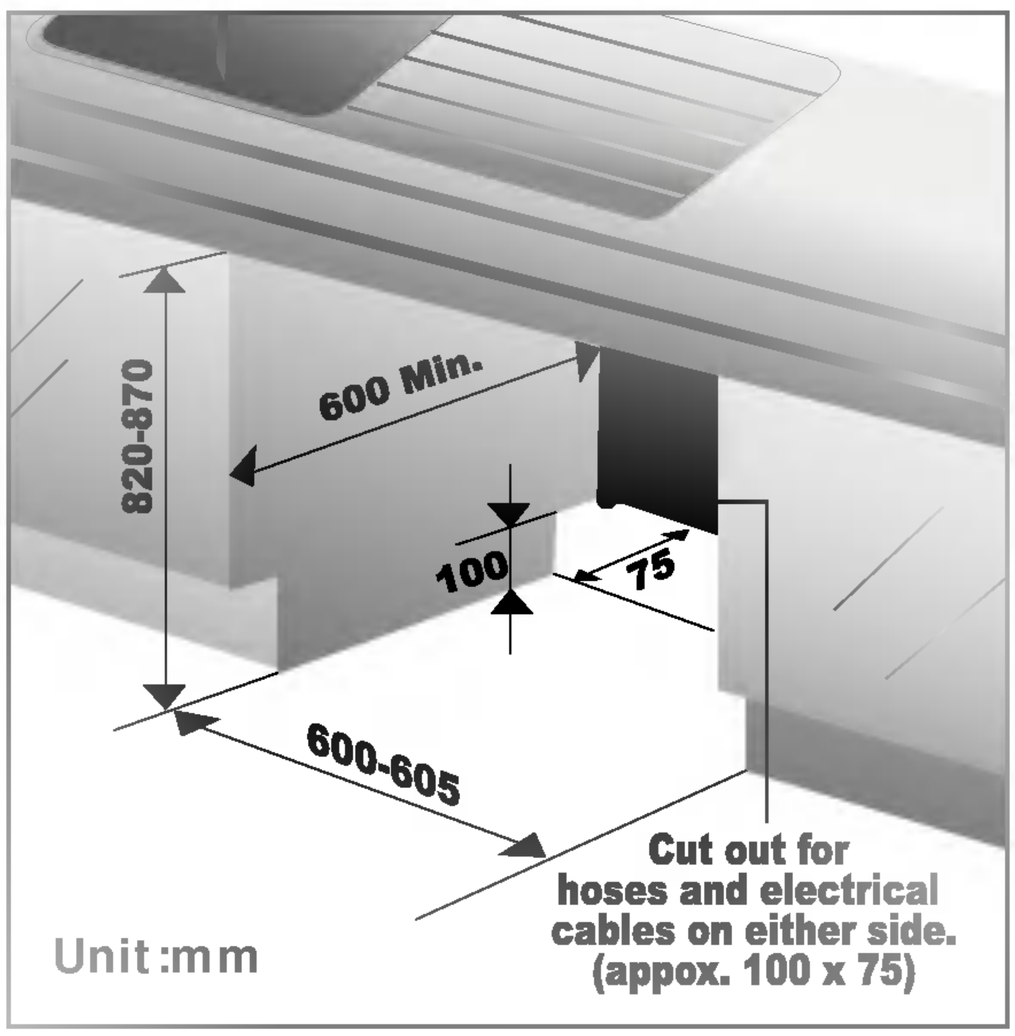

If bare chipboard is adjacent to or above the dishwasher, it should be sealed with a waterproofing paint or sealant to prevent swelling due to steam.

Step 2 :
PREPARE ELECTRICAL WIRING

CAUTION

For personal safety, remove house fuse or open circuit breaker before installation. Do not use an extension cord or adapter plug with this appliance. Electrical and grounding connections must comply with the national electrical code/provincial and municipal code and/or other local codes.

1 This appliance must be supplied with correct rating voltage and hertz as shown on instruction manual, and connected to an individual, properly grounded branch circuit, protected by minimum 15 amp circuit breaker or time delay fuse. Wiring must be 2 wires with ground.

2 The power plug must be in a accessible location adjacent to and not behind the dishwasher and within 1.2 meters of the dishwasher side.(See page 7 Fig.A)

3 The power plug must be correctly earthed, if in doubt, have it checked by a qualified Electrician. No other appliance should be connected to the same plug outlet by a double adapter or similar plug.

INSTALLATION INSTRUCTION

Step 3 :
PREPARE DISHWASHER FOR INSTALLATION

1 Lay the dishwasher on its back.

2 Adjust the legs to the needed height of cabinet as shown in below figure.

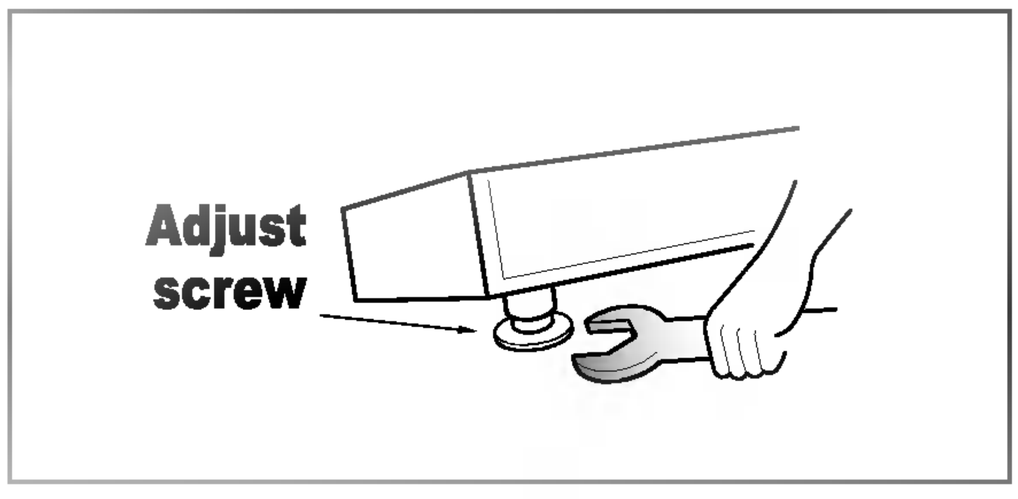

Step 4 :
INSTALL THE DISHWASHER IN CUPBOARD

1 Before sliding the dishwasher into the cupboard opening, all necessary final height adjustment and balancing adjustment should be done using the spanner.

2 Slide the dishwasher into the cabinet opening carefully. Make sure that the drain hose inside the cabinet is not kinked or stretched.

CAUTION

If the height of cupboard is below 850mm, you should remove the top table by unscrewing the 2 screws. (Two of rear)

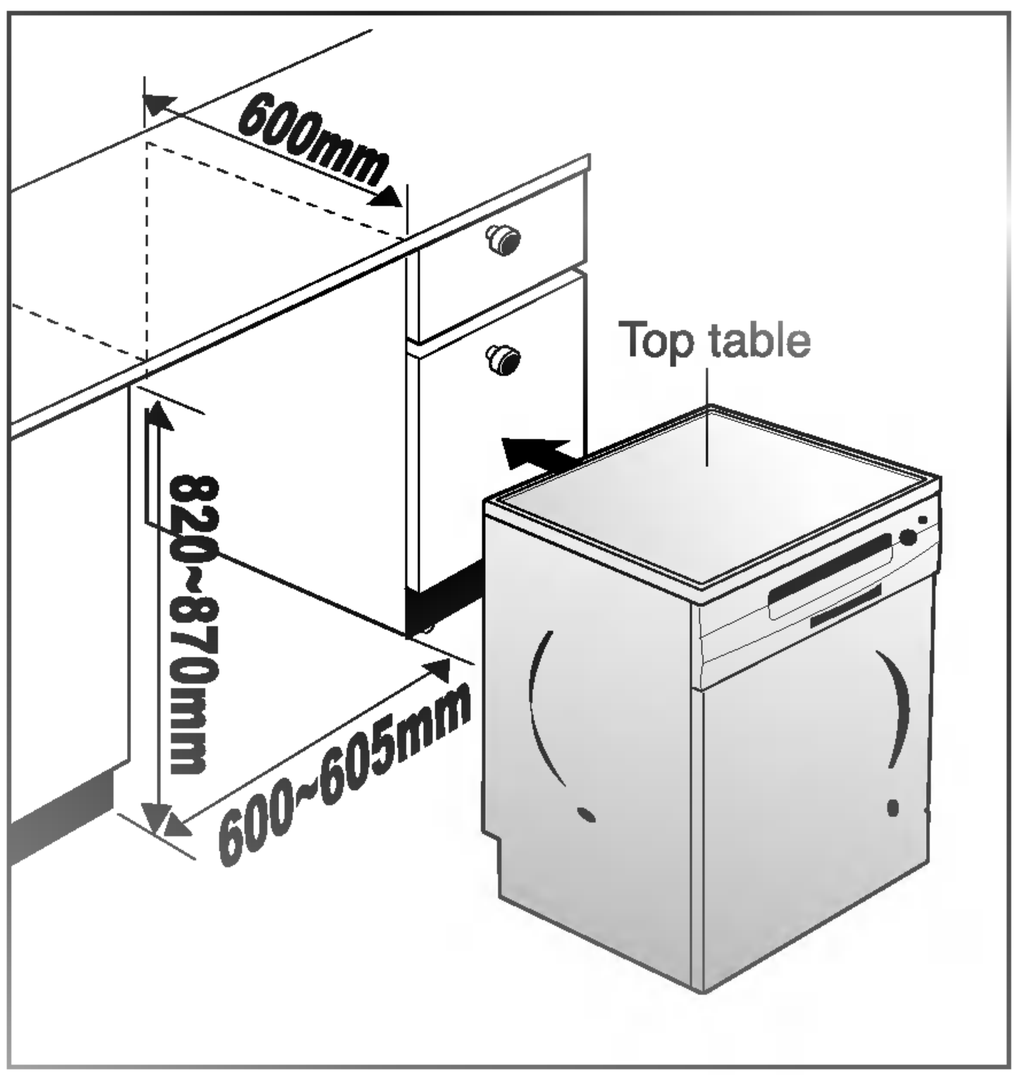

INSTALLATION INSTRUCTION

Step 5 :
DRAIN LINE CONNECTION

1 If the end of drain hose does not fit to the drain line, use a piece of rubber connector(not supplied) that must be resistant to heat and detergent and may be obtained from a plumbing shop.

2 There are 2 typical connections as shown in Figure A, B.

The "S" trap spigot must be drilled out cleanly and free of obstruction to its maximum internal diameter, if used for drainage.

To prevent siphoning, one of the following instruction methods must be followed:

■ When the drain hose is connected to a sink "s" trap or waste disposal unit, the hose must be looped up to the underside of the bench top and secured.

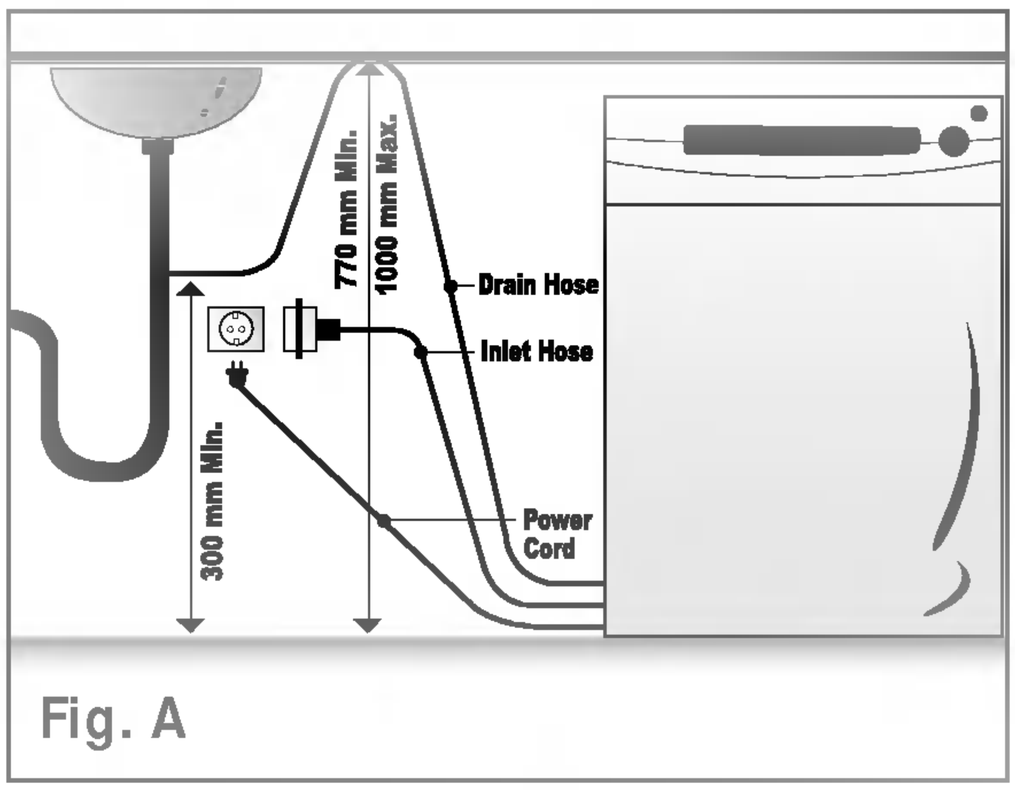

Fig. A

■ When the drain hose is connected to a separate stand pipe, it is essential that an tight connection is made.
Refer to Fig.B

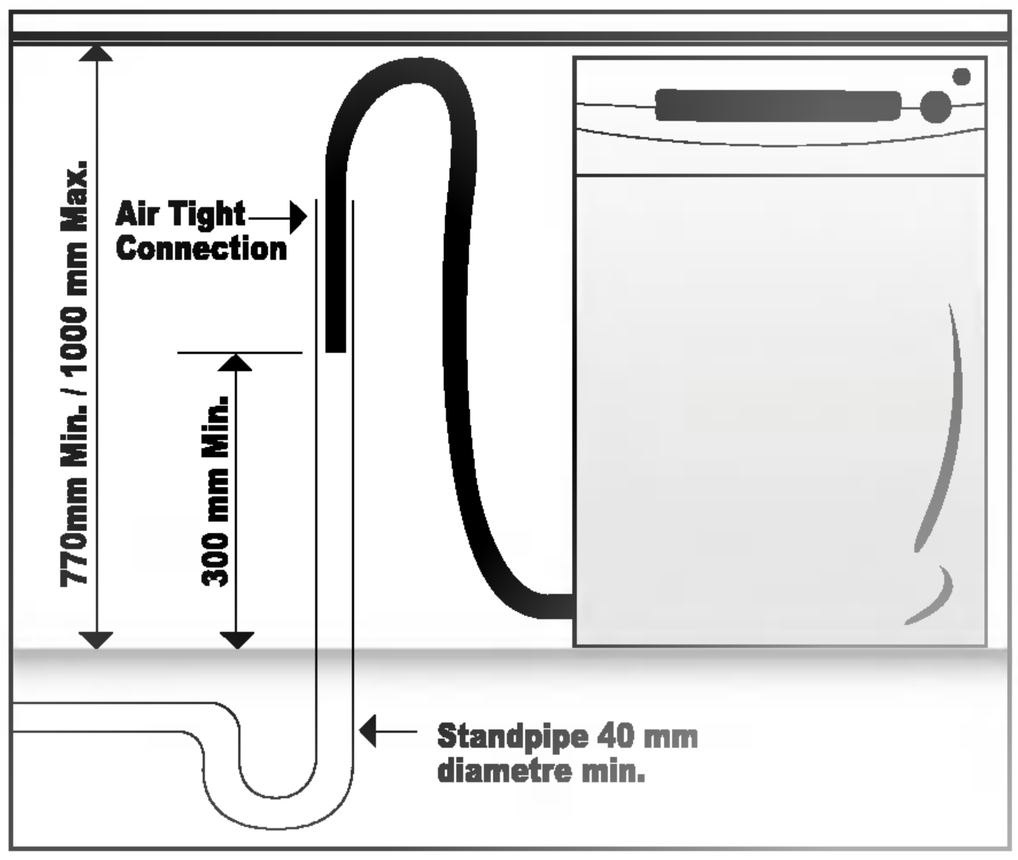

Fig. B : Drainage connection - stand pipe.

Drain Hose Extension
Extend Drain Hose as shown below.

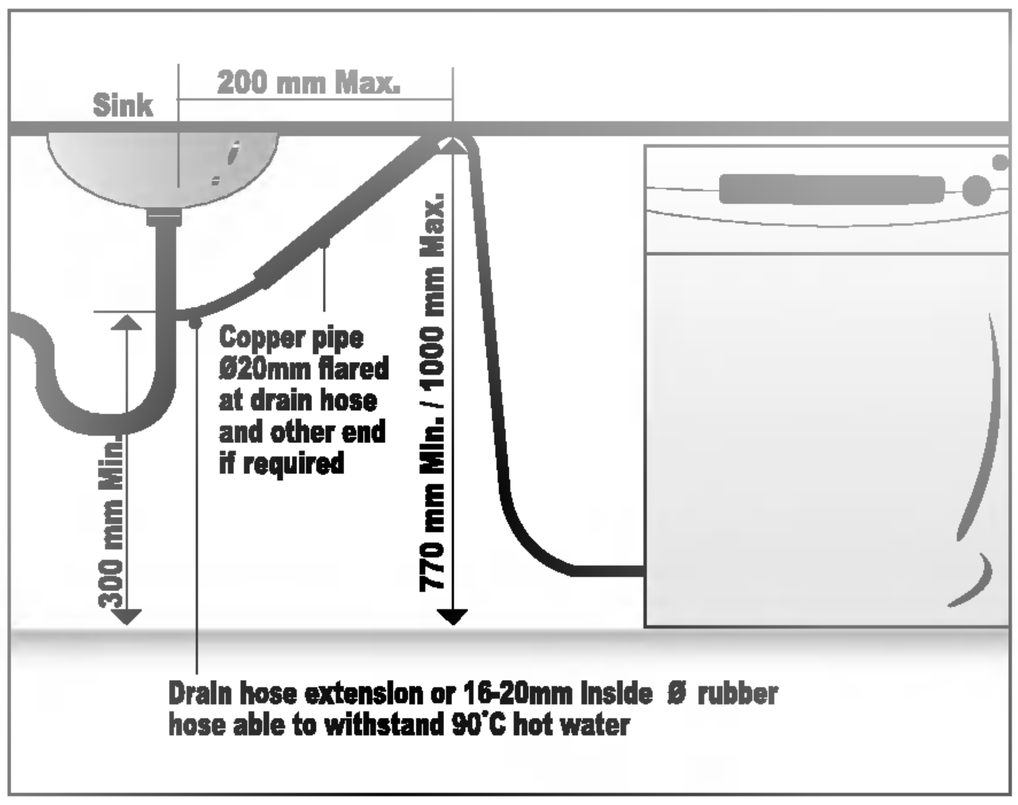

CAUTION
When you connect or extend Drain Hose, make sure that drain hose is not kinked. (Bends should have 40 mm radius.)

INSTALLATION INSTRUCTION

Step 6 :
WATER SUPPLY CONNECTION

1 Connect the water supply hose to the valve behind dishwasher and the water tap as shown in figure.
This dishwasher may be fed with either hot or cold water. If the water can not be maintained below 65°C, the dishwasher must be connected to cold water.

2 When connecting, the sealing tape or sealing compound should be used to avoid water leaks. Make sure that the line is not kinked or sharply bent.

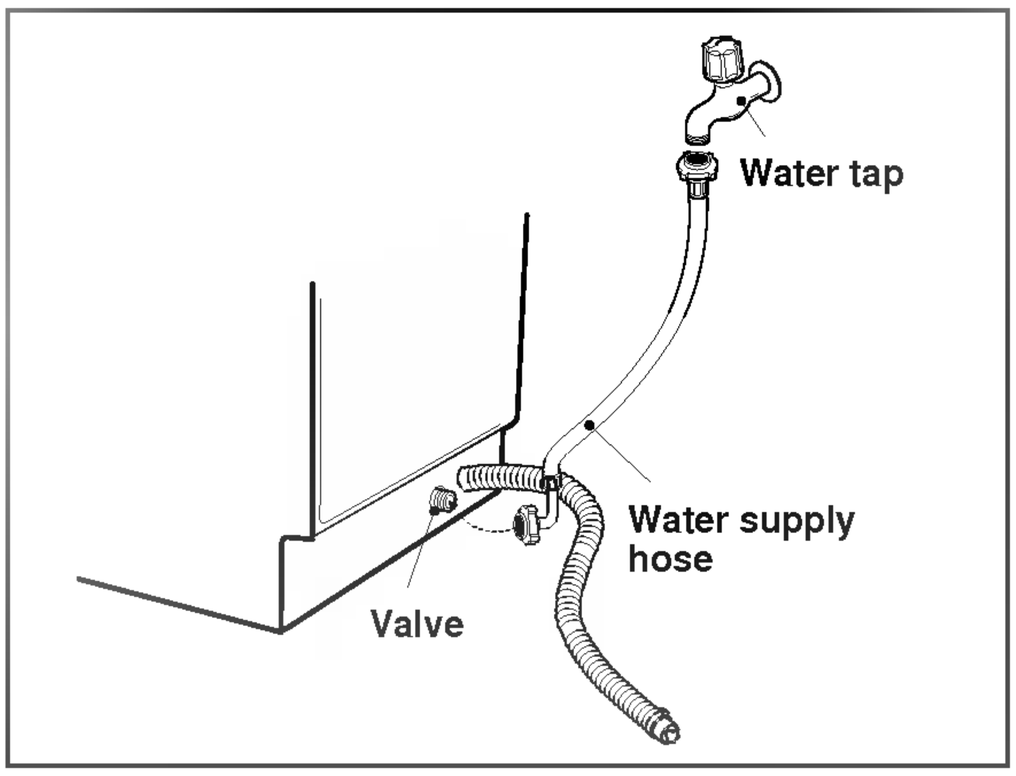

Step 7 :
FINAL CHECK AND ASSEMBLING

1 Securely hand tighten supply hose to water supply.
Plug power supply cord into an earthed the power plug and switch on.

2 Operate the dishwasher through one cycle (Quick cycle is recommended) to check for water leak and operating conditions.

Step 8 :
HOW TO LEVEL THE PRODUCT

After installing the product, if you feel some sticky or hear a frictional sound between the side portion of door and tub when you open or close the door, you have to adjust the level of product.

Case 1. In case the door is slanted to the right

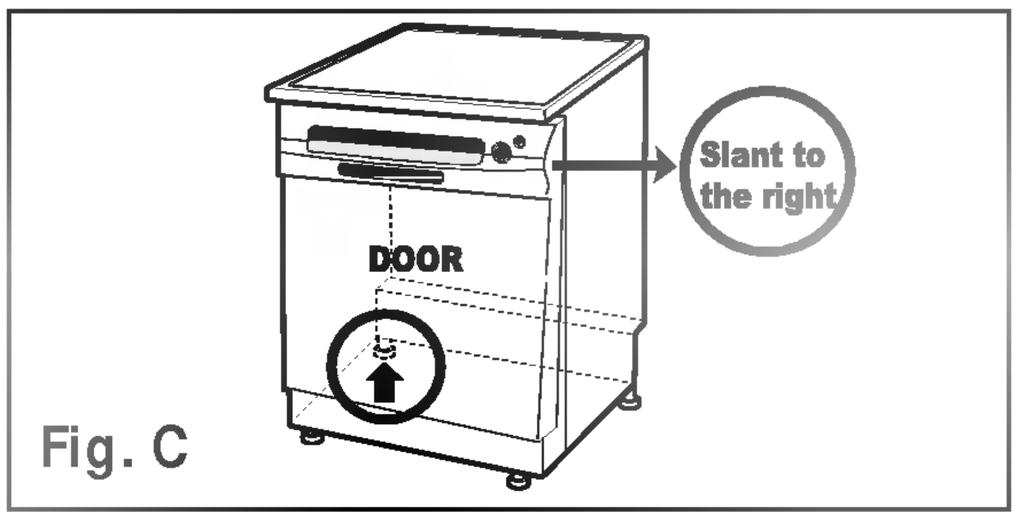

Fig. C

- If the door is slanted to the right as shown in figure C, repeat the procedure shown as below until the door is operated normally.
  1) Unscrew(counter-clockwise) the left leg of back side and high the level.
  2) Check the opening of door if there still remains sticky or friction sound.
- When the product is correctly leveled, there do not remain slant, stickiness or a friction sound.

Case 2. In case the door is slanted to the left

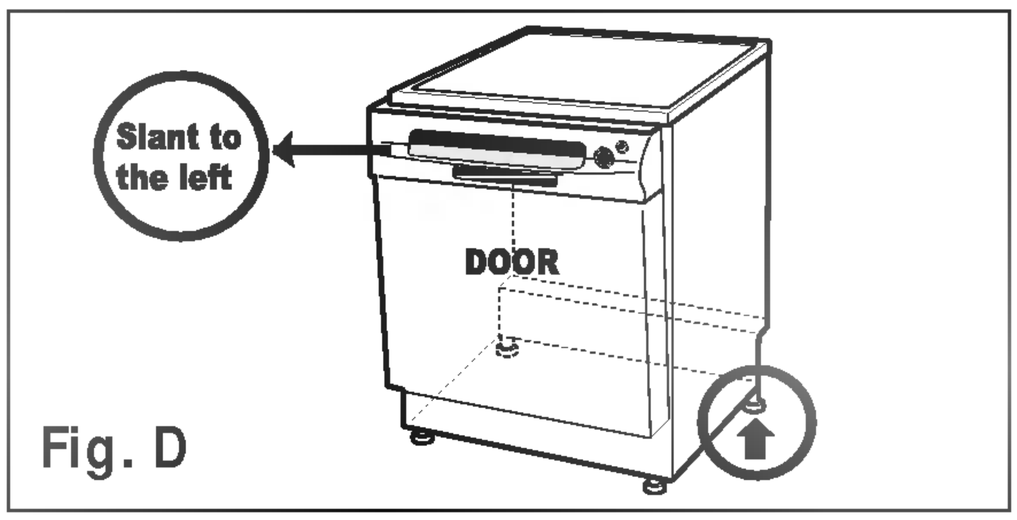

Fig. D

- If the door is slanted to the left as shown in figure D, repeat the procedure shown as below until the door is operated normally.
  1) Unscrew(counter-clockwise) the right leg of back side and high the level.
  2) Check the opening of door if there still remains sticky or friction sound.
- When the product is correctly leveled, there do not remain slant, stickiness or a friction sound.

PARTS NAME

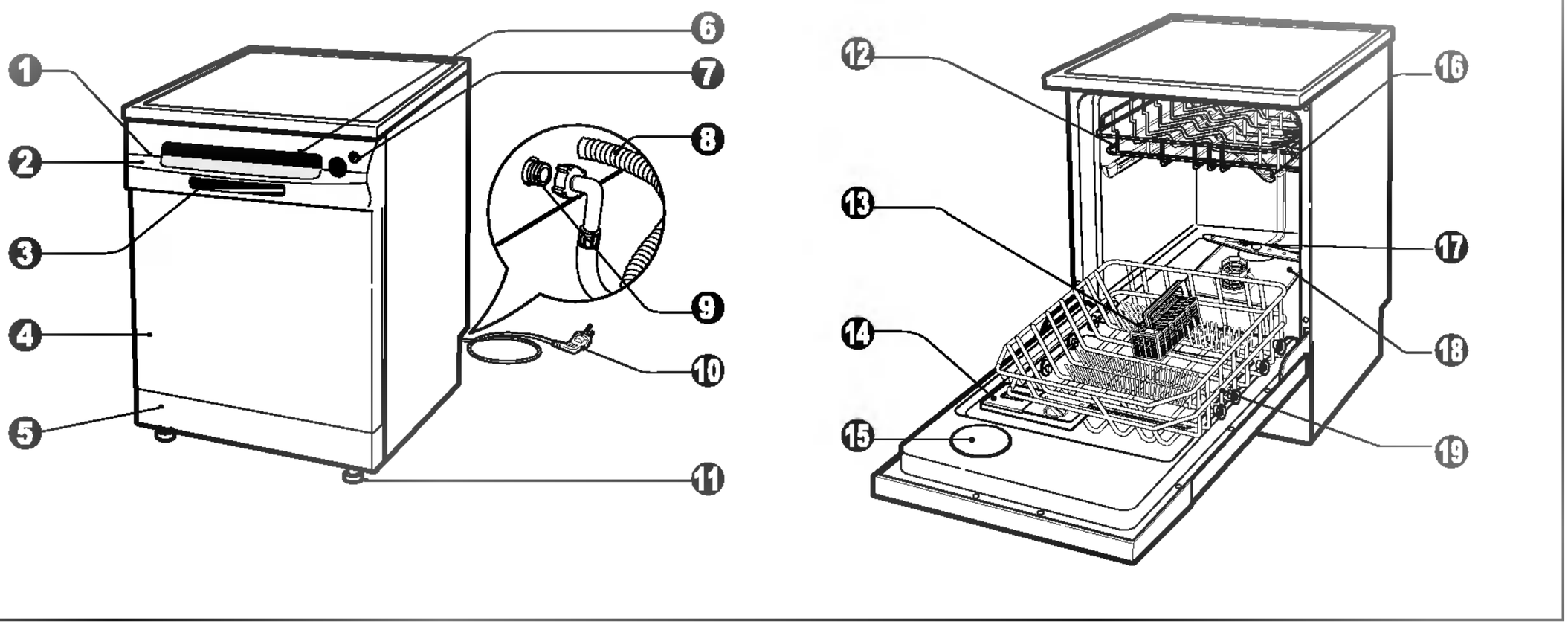

1. Vapor vent
2. Control Panel
3. Door Handle
4. Front Cover
5. Lower Cover
6. Process Monitor
7. Power Switch
8. Drain Hose
9. Inlet valve ASM
10. Power Cord
11. Adjust Leg
12. Upper Rack
13. Cutlery Rack
14. Detergent & Rinse Aid Dispenser
15. Vapor Vent Cover
16. Upper Spray Arm
17. Lower Spray Arm
18. Filter ASM
19. Lower Rack

Accessories

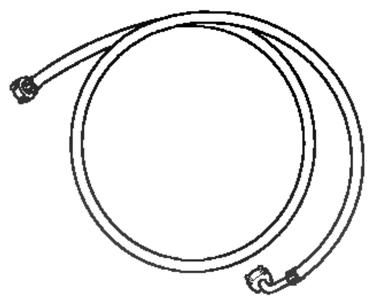

Inlet Hose

FUNCTION OF CONTROL BUTTON

- If you want to delay the start of selected program, press this button before pressing start button.
- Pressing the delay time will increase time by 1 hour.
- The delay start time can be adjusted from 1 hour to 19 hours.

- This function is for saving time and energy.
- With each press, time save ON and OFF is repeated.
- When select this function, the operating time will be shorten.

- In case of small load, use upper or lower rack only to save energy.
- With each press, can select upper or lower rack only.
- In case you don't select this button, the machine always works vario washing, which operate upper and lower spray arm alternately.

- For operating, press this button first for power on.
- After operating, this button automatically switches off for safety and energy saving.
- If case of irregular surge disturbances to the machine, the power may be automatically turned off for safety.

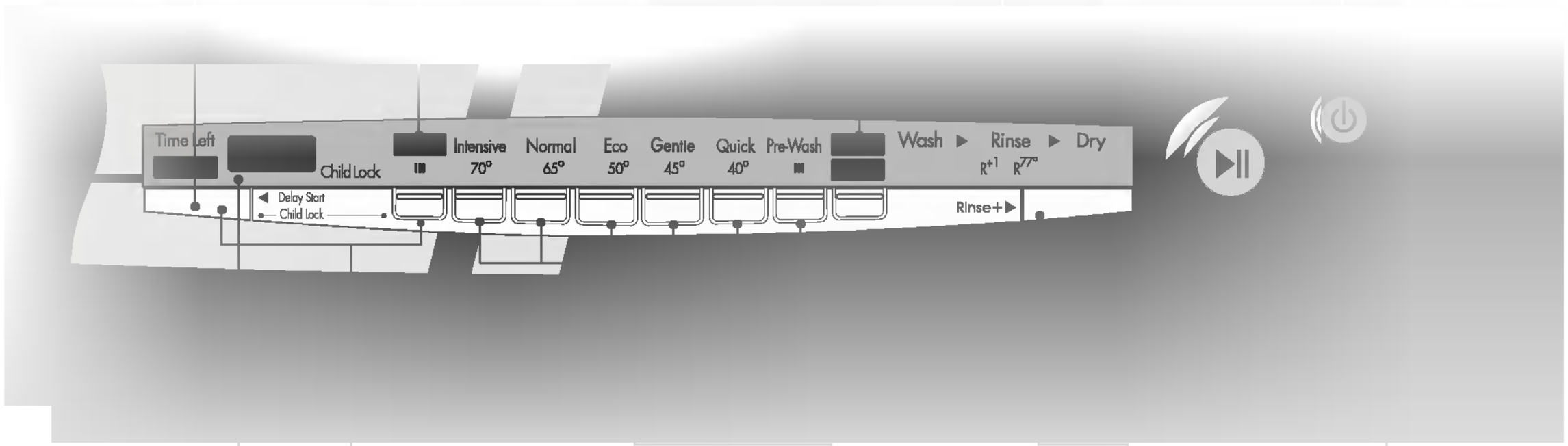

- Indication of remaining time
- Self diagnosis and error message display

- Used to lock or unlock the control buttons to prevent all the setting from being changed by a child.
- For locking/unlocking, press Delay Start and T-Save button simultaneously.

- When power is on, program is automatically set to normal.
- If you want to change the program, press the button and set the program you want to.

- With each press, rinse+, rinse+ & 77°C sani rinse, 77°C sani rinse is repeated.

- With each press, Start and Pause is repeated during operation.
- If the machine remains in Pause mode for 10 minutes, the power is automatically turned off.

HOW TO USE AND OPERATE

1. Loading your Dishwasher

For the best washing performance, it is important that the dishwasher is loaded according to instructions. Before loading items into the dishwasher, you must scrape off large particles in particular non soluble items such as bones, toothpicks, pips, etc.

When loading the dishwasher, observe the following general guidelines:

- Position crockery such that water will contact all surfaces.
- Deep based items should be placed at an angle to help water run off and dry properly.
- Items with burnt on scraps should be soaked prior to loading in the dishwasher.

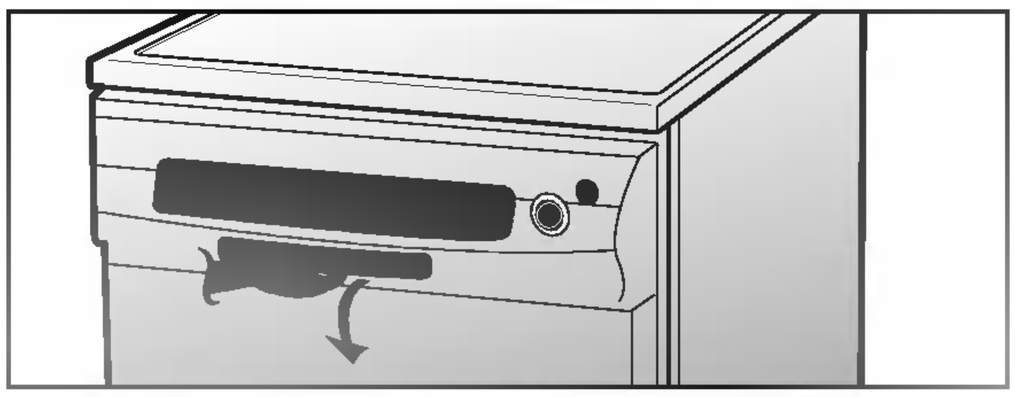

2. Loading the Lower Rack

The lower basket is best loaded with dinner plates, soup bowls, dishes, pots, pans, lids and even the grill tray.
Plates should be positioned upright and facing the center of the rack.
Pots, pans and large dishes must be turned upside down.

Take care not to obstruct the rotation of the spray arms.

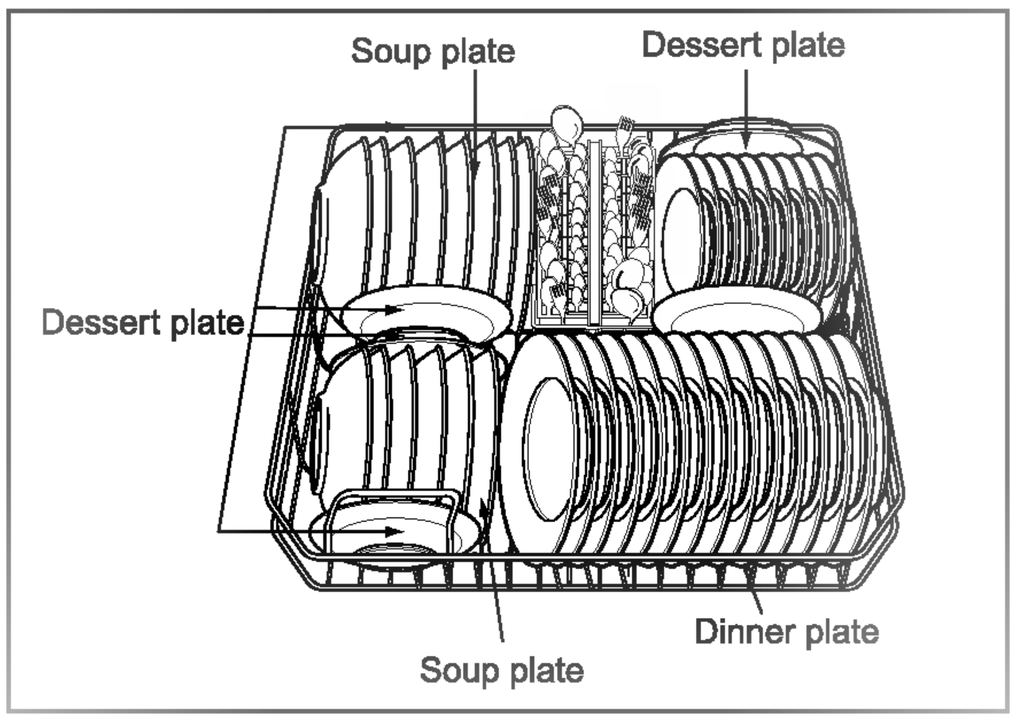

Be careful large items not to prevent the detergent dispenser lid from opening

3. Using the Cutlery Basket

Cutlery should be mixed within each section of the cutlery basket to prevent nesting of similar items. Place the cutlery in the cover with the handles down. The cover can be hinged and clipped away from the basket if you choose not to use them.
For the knives, place at seperate rack for knives located at upper rack.

Take care when loading and unloading sharp items.

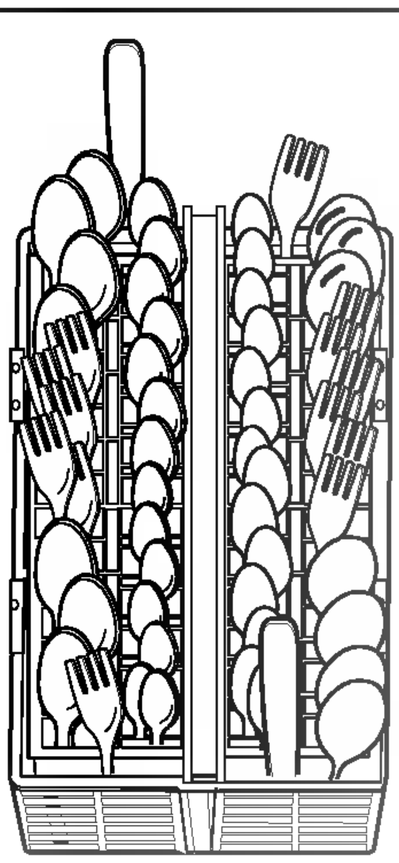

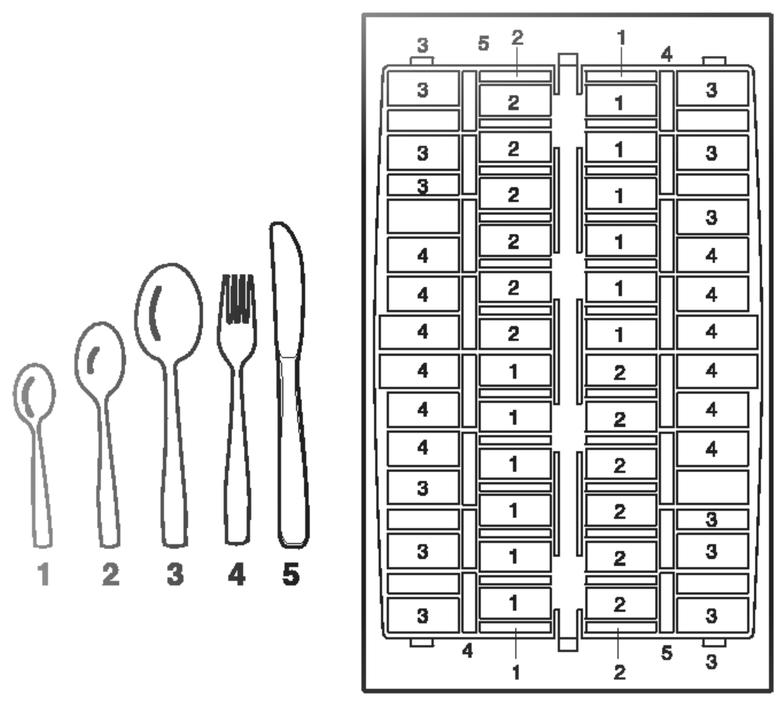

HOW TO USE AND OPERATE

4. Loading the Upper Rack

The upper rack is best loaded with more delicate items, small plates, long cutlery, cups, glasses and dishwasher safe plastic items. Plates should be positioned upwards with the plate bottom facing the front of the rack.
Cups, glasses and bowls must be positioned upside down.
Extra cups or cooking utensils can be laid on the fold down cup racks which may also provide support for long stem glasses.
Take care not to obstruct the rotation of the spray arm under the upper rack.

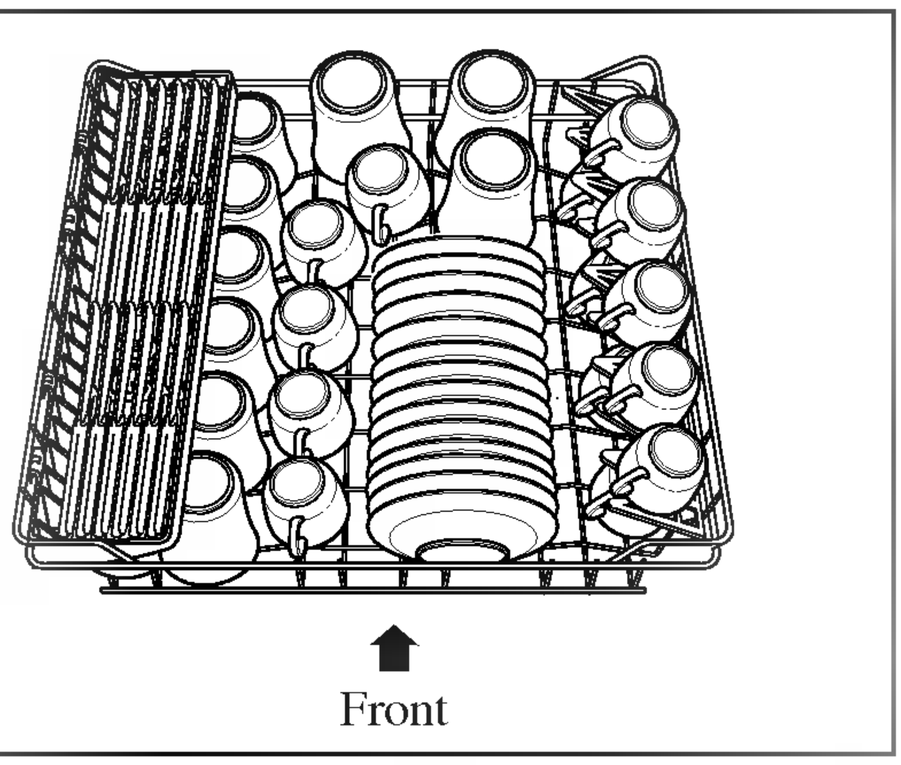

Non Dishwasher Safe Items

The combination of high water temperatures and dishwasher detergent may damage particular items, therefore we do not recommend using the dishwasher to wash the following:

- Copper or anodized aluminum
- Hand painted silver or gold leaf crockery
- Wood or bone handled utensils
- Iron or non rust proof utensils
- Plastic items which are not dishwasher safe.

5. Adjusting the Upper Rack

Your upper rack can be raised or lowered to cater for different size of crockery. Before adjusting, ensure rack is empty of all crockery and side the rack out.
Reinsert the rack in the chosen position.
Fitting the rack back into the standard position reduces the space between the upper and lower rack.

After adjusting, check that the spray arm is free to rotate.

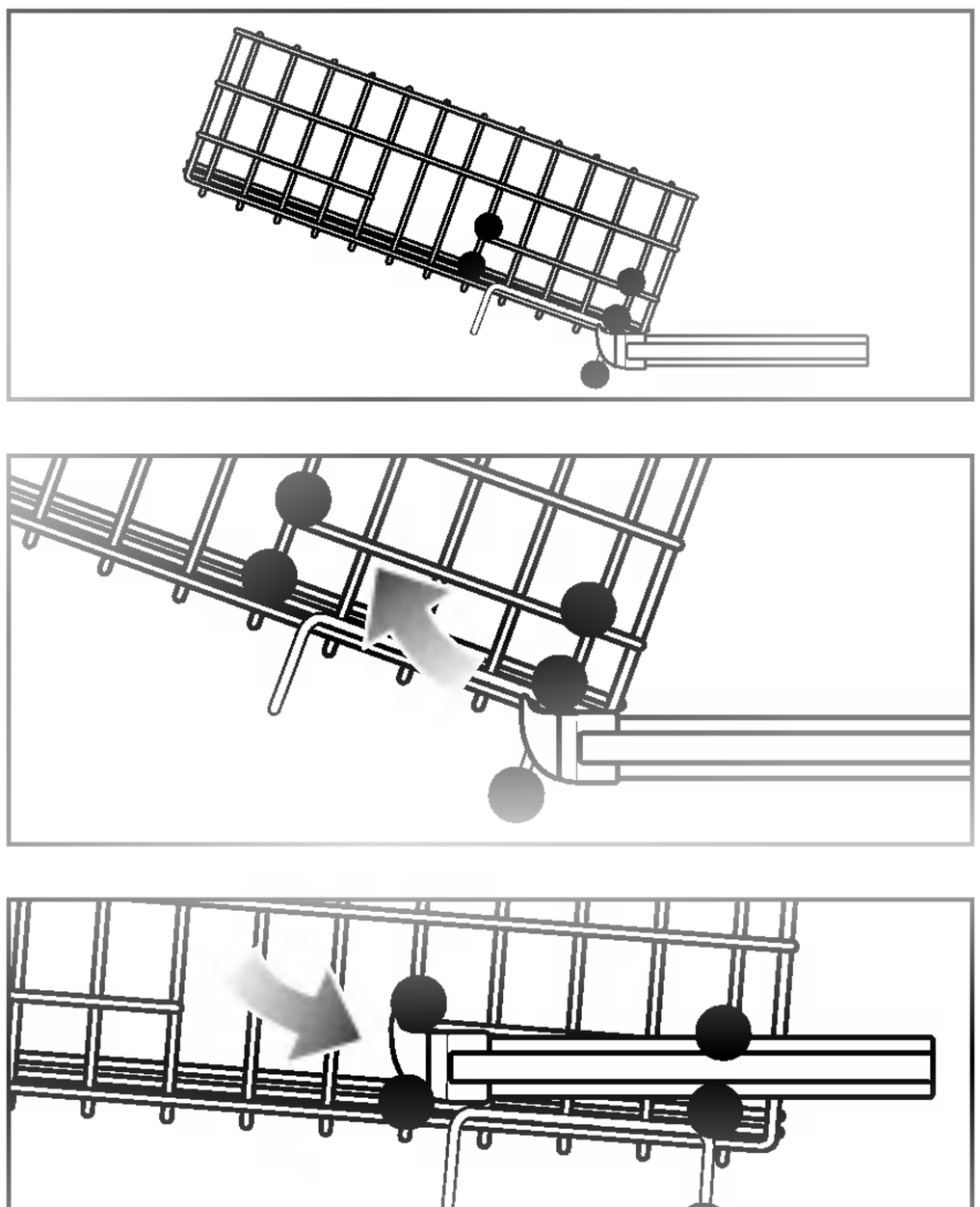

Before adjusting, ensure rack is empty of all crockery.
Otherwise crockery may be damaged or you may be injured.

6. Adding Detergent Dispenser

- Detergent must be put into the detergent chamber before starting every program except the Pre-Wash.

- Use only the detergent intended for household dishwashers. (Ordinary hand-washing detergent should not be used, because the foam can interfere with proper operation.)

- Chambers hold 15g and 25g.

- The amount of detergent depends on the program. Refer to the guide table.

PROGRAM	AMOUNT OF DETERGENT
Intensive	25g
Normal	20g
Eco	15g
Gentle	10g
Quick	10g
Pre-Wash	No detergent

- After the detergent is supplied, the chamber lid should be closed.

- The detergent is dispensed automatically during the operation.

- The chamber lid remains open after operation.

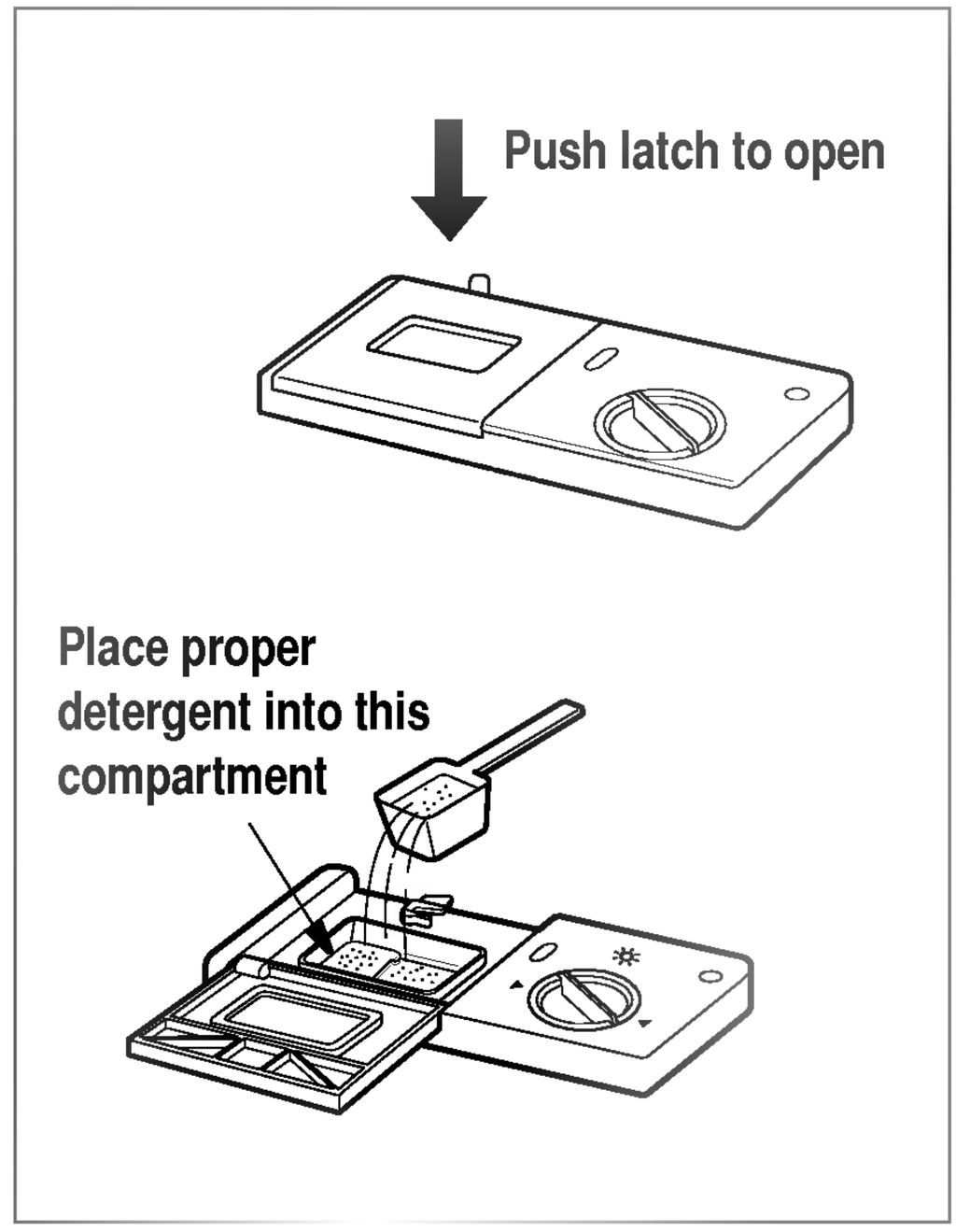

Use only the detergent intended for household dishwashers. (Ordinary hand-washing detergent should not be used, because the foam can interfere with proper operation.)

The detergent used is a special Dishwasher detergent and like all household chemicals should be treated as a poison and kept out of reach of children. At completion of each wash program, the detergent compartment should be checked and any remaining detergent removed.

7. Adding Rinse Aid Dispenser

To fill the Rinse Aid chamber, rotate the round cap counter clockwise and remove. Fill the container to the maximum level with a good quality Rinse Aid, then replace and lock the cap.
The Rinse Aid is automatically dispensed during the final rinse cycle.

Depending on the dosage setting and the number of washes, the chamber may need only to be topped up once per month. The rinse aid level can be checked by looking at the indicator window when the dishwasher door is fully open.

● Black indicates sufficient Rinse Aid

O Clear indicates Rinse Aid required

The dosage setting is factory set to suit most installations. If, after washing, you notice cloudy spots, streaks or water marks on your glassware, it may be necessary increase the setting. To do so, remove the cap and rotate the indicator arrow to a higher setting then replace the cap . If the glasses are smeared or there is foam present on the bottom of the glass or the bottom of the machine. Select a lower setting.

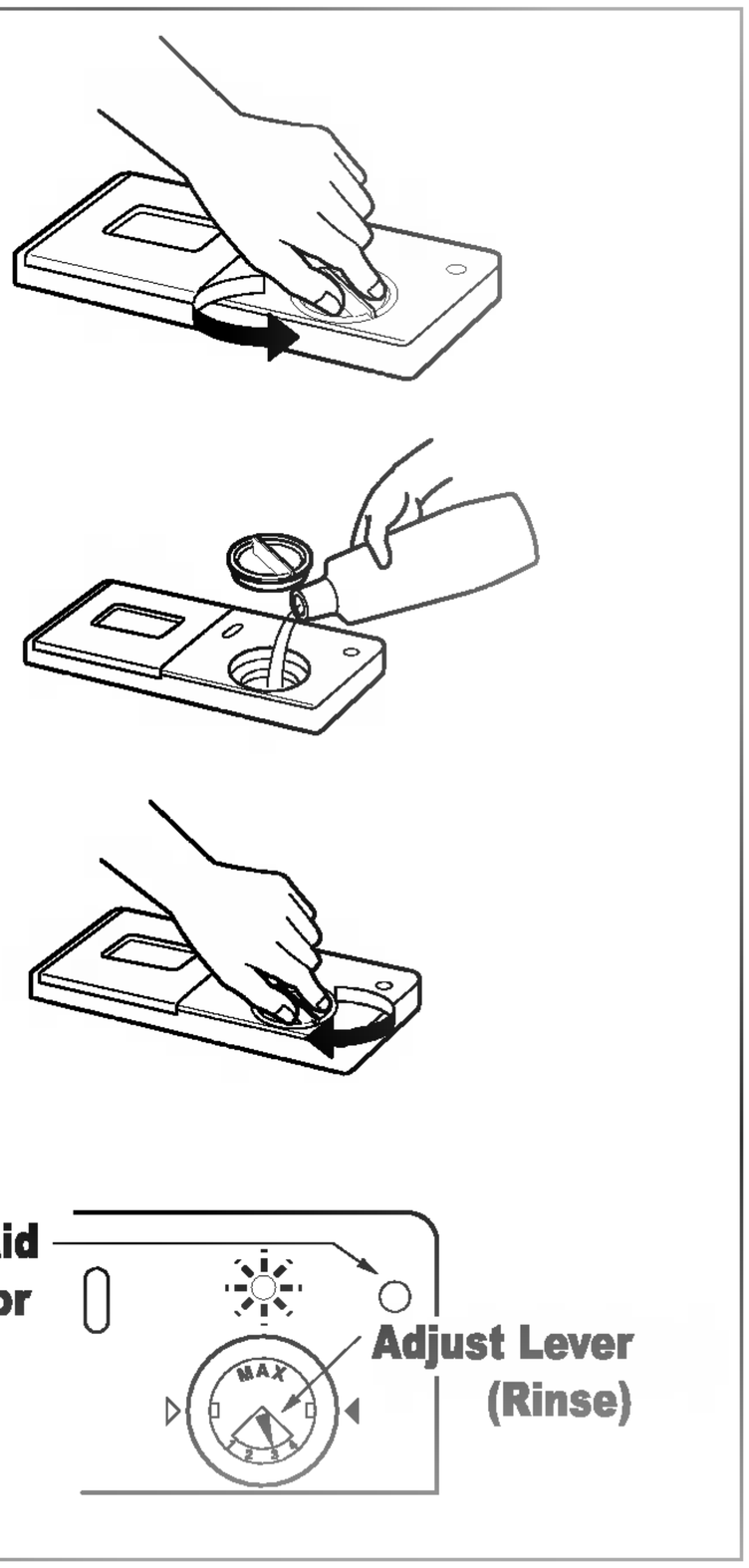

Rinse Aid is necessary in order to get spot and streak free dishes as well as improved drying. Using the correct amount will improve wash performance. However, using too much can produce excess foam leading to possible water leaks.

8. Fold down dividers.

■ Fold-down dividers at the lower rack can be lowered to improve stacking of pots and pans.

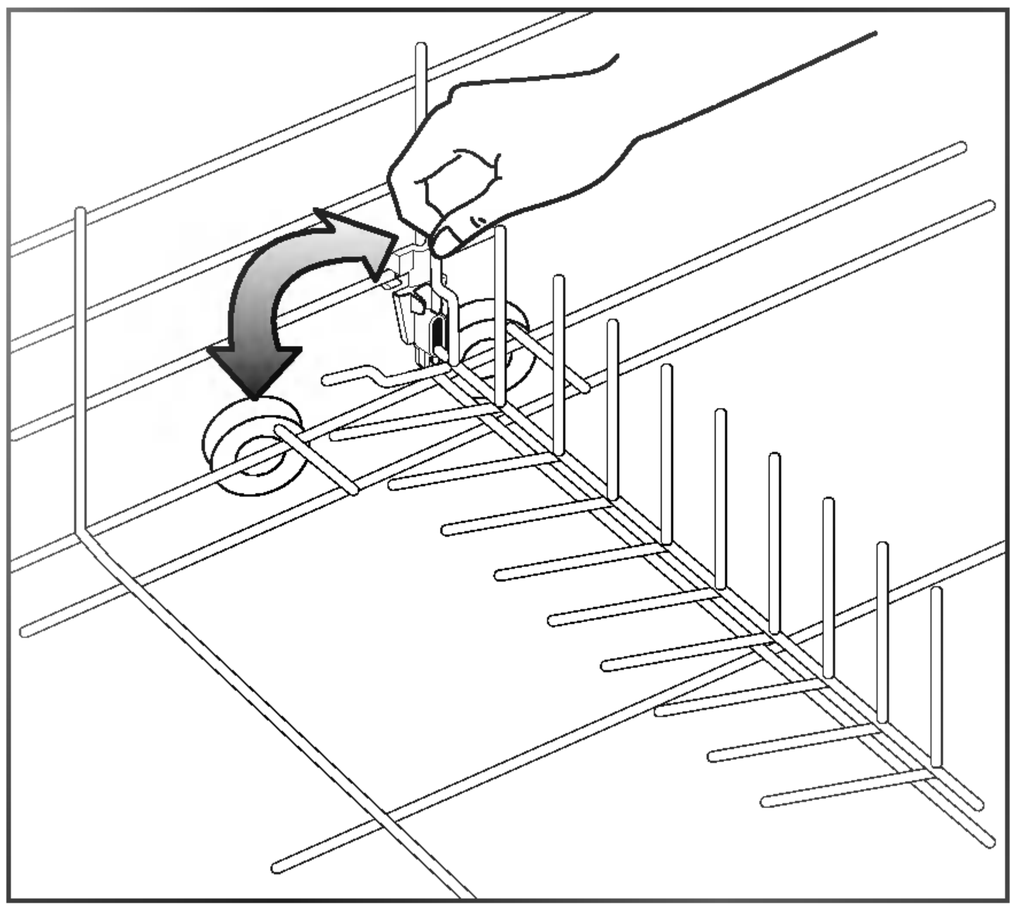

9. Drying

■ At the end of the program, it is recommended to fully open the door to assist in drying.

10. Energy Test (AS / NZS 2007)

■ Appliance loaded in accordance with standard specifications.

- Example of loaded dishwasher : p.11~12
- Capacity : 14 place settings
- Comparability course : Economy with Rinse+ (R^{+1}) option.
- Rinse aid setting : 3
- Reference cleaner : 6g of detergent onto the inside surface of the door and fill 24g into the detergent dispenser.
- Height-adjustable Rack-U must be inserted in the uppermost position.

WASH OPTIONS

Before selecting the wash program, press the power button. Then Normal program will be selected with remaining time on display window. To change the program, press the program button required.

Start / Pause Button

After selecting a wash program, press the Start or Pause button to start the wash cycle.
If at any time you want to interrupt the washing cycle, press the Start or Pause button. Your dishwasher will then pause. Press the Start or Pause button again to re-start dishwasher.

Progress Indicators

Once you select a program, the progress indicators light(Wash, Rinse, Dry). When press the Start or Pause button to start the program, the current stage light will blink.

Delay Start

This function enables the wash cycle to start anywhere between 1 to 19 hours later.

- ■ Select the program that you want by using the program button.
- ■ Set the delay time you want by pressing the "Delay Start" button. The delay start time is increased by 1 hour for each pressing.
- ■ Press the start button. Then the program will be started automatically after the delayed time shown in the display has expired.

Rinse Plus

Normally when you select any program, the Rinse process is done only two (1 normal rinse +1 heating rinse) or three (2 normal rinse + 1 heating rinse) times according to selected program. But if you want to rinse more, you can use this function. As you select R^{+1} with pressing Rinse button, the normal rinse will be done one time more.

Child Lock

To reduce the possibility of children interrupting the dishwasher when unattended, the child lock feature can be selected.

- ■ For locking or unlocking, press "Delay Start" and "T-Save" buttons simultaneously.

Sani-Rinse

When you want to rinse dishes with higher temperature for sanitation, use this function at any program. If you choose this function, the water temperature goes up to 77˚C when rinsing.
Press Rinse button until "$R^{77°}$" is lighted on.

Half Load

With each press, upper rack only(Upper light on), lower rack only(Lower light on) can be selected.
In case of small load washing, use upper or lower rack only to save energy.

PROGRAMS

Program	WASH		RINSE				DRY
	Pre Wash	Main wash	Rinse 1	Rinse 2	Rinse 3	Heating Rinse	
Intensive	50℃	70℃				70℃	
Normal		55℃				65℃	
Eco		40℃				50℃	
Gentle		40℃				45℃	
Quick		35℃				40℃	
Pre-Wash							

Intensive Wash

This program is for heavily soiled loads including pots, pans and casserole dishes.

Normal Wash

This program is for normally soiled everyday loads.

Eco Wash

This program is for light soiled everyday loads.

Eco Wash with Rinse+ option

This program is for normally soiled everyday loads.

Gentle Wash

This program is for washing delicate items like glasses.

Quick Wash

This program is for that quick wash of lightly soiled recently used dishes and cutlery.

CHECK AND CARE

To prevent trouble and poor operating, it is important to check and care for the filters and spray arms at intervals.

Filters

- Remove the lower rack first.
- Turn the mesh filter counterclockwise off.
- Take out the mesh filter, upper STS filter and out filter.
- Clean them if necessary.
- Replace them in the reverse order.

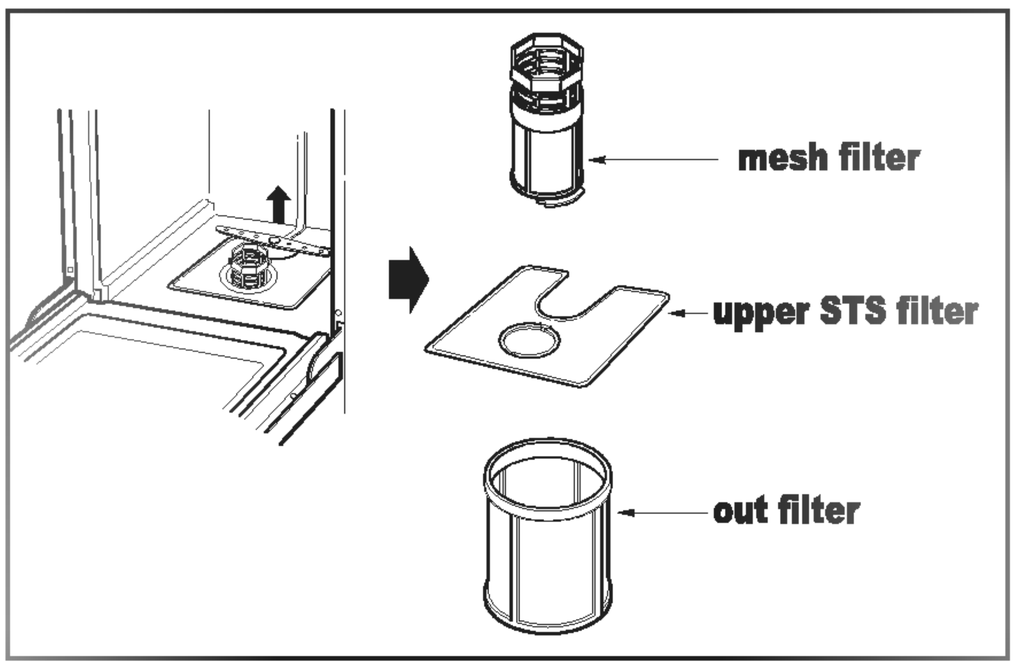

Lower Spray Arm

- Check that the water jet holes are not blocked by food particles.
- When necessary to clean, remove the arm by pulling up.
- Clean the spray arm and replace by pushing down.

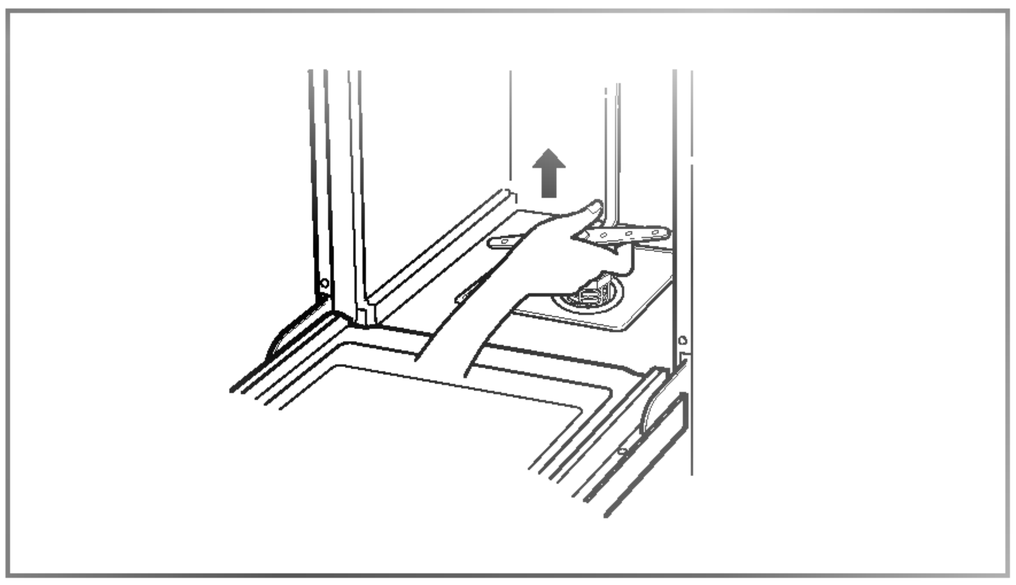

Upper Spray Arm

- Pull the upper rack forwards.
- Check that the water jet holes are not blocked by food particles.
- When necessary to clean, remove the arm by unscrewing the nut.
- Clean the spray arm and replace it in the reverse order.

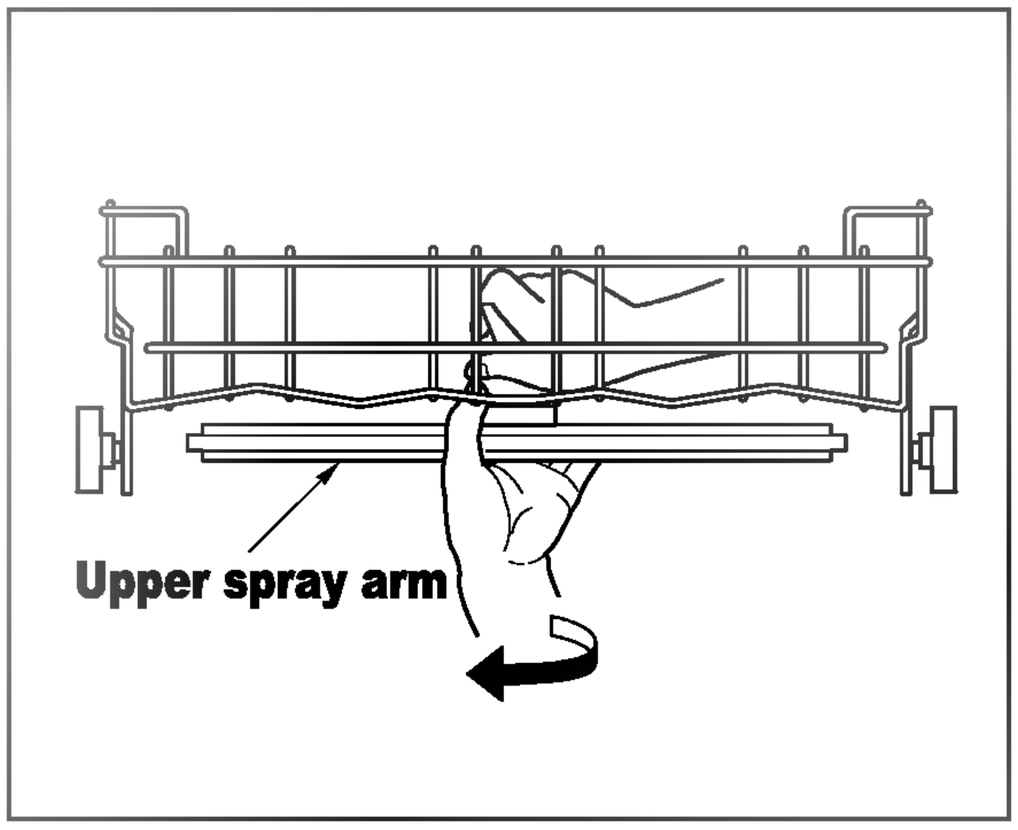

TROUBLE SHOOTING GUIDE

■ If a problem occurs in your machine, call for service.
■ Before you call for service, check the below instructions to see whether the problem can be solved by yourself first.

Problem	Possible Causes
The lamps do not come on when the power switch on.	• Plug is not properly inserted in the socket. • Fuse blown or circuit breaker tripped. • The electricity of the house was cut off.
The machine does not start.	• Door is not fully closed. • The start button is not pressed.
Water is not pumped away. (The display show "OE" code)	• The drain hose is kinked. • The filter is clogged. (Clean the filter)
The display shows "FE" code (Automatically Drain Pump operated)	• Excessive water is supplied than normal water level. • The inlet valve is troubled.
	• Water is not supplied. (Water tap is not opened)
The display shows "E 1" code	• Water leakage in Hose connections • Water is leaked by damages.
The display shows "HE" code	• The circuit of Heater is troubled.
The spray arms does not rotate smoothly	• The mounting of spray arms is blocked by food particles. (Clean the holes of the spray arm)
White deposits are left on the dish washer after washing.	• The amount of detergent or rinse-aid set incorrectly.
Streaks are left on glassware	• Too little Rinse-aid dispensed.
Dry results are not satisfactory.	• Too little Rinse-aid dispensed.
Washing results are not satisfactory.	• Incorrect amount of detergent. • Utensils incorrectly arranged or overloaded. • Filters are clogged. • Water jet holes of spray arms blocked. • Spray arms' rotation obstructed by utensils. • Unsuitable program selected.

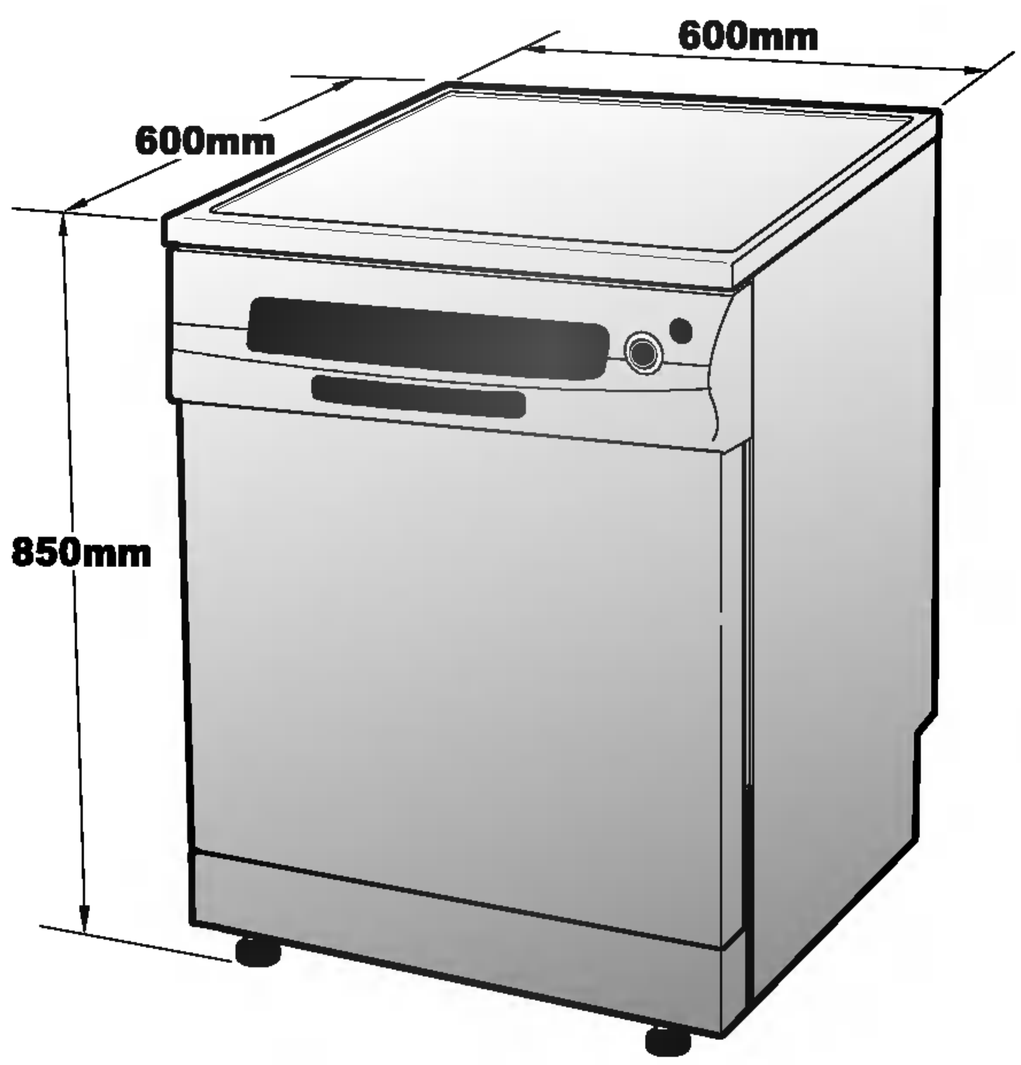

	14 Place settings
Dimension	600 x 600 x 850 mm (W x D x H)
	52 kg
Power Supply	See rating label
Power Consumption	See rating label
Water Consumption	See energy label
Water Feed Pressure	50 ~ 800 kPa