

LG Electronics Inc.

P/NO.3828JS8023F

FRIDGE-LARDER

User's Guide

Please read this User's Guide carefully before operating and keep it handy for reference at all times.

(In the UK Only)

Important

The wires in this mains lead are coloured in accordance with the following code:

GREEN AND YELLOW:EARTH
BLUE:NEUTRAL
BROWN:LIVE

This appliance must be earthed

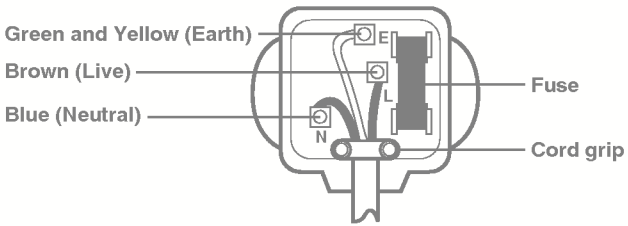

As the colours of the wires in the mains lead of this apparatus may not correspond with the coloured markings identifying the terminals in your plug, proceed as follows:

The wire which is coloured Green and Yellow must be connected to the terminal in the plug which is marked with the letter E or by the earth symbol(⏚) or coloured Green or Green and Yellow.

The wire which is coloured Blue must be connected to the terminal which is marked with the letter N or coloured Black.

The wire which is coloured Brown must be connected to the terminal which is marked with the letter L or coloured Red.

If a 13 amp(BS 1363) plug is used, fit a 13 amp BS 1362 fuse.

Table of Contents

Introduction
- Important safety Instruction
- Disposal of the old appliance & packing of new appliance
- Identification of Parts

Installation
- Location
- Installation with/without top table
- Electrical Connection
- Door Handle

Operation
- Starting
- Controlling the Temperature
- Switching Off

Suggestion on food storage
- Storing food

Care and maintenance
- Defrosting
- Cleaning
- General Information
- Lamp Replacing
- Tips for saving Energy

Trouble shooting
- Trouble shooting

To Reverse the Doors
- How to Reverse the Door

Important Safety Instruction

Accessibility of Supply Plug

The supply plug of the refrigerator-larder should be placed in easy accessible position for quick disconnection in emergency.

Supply Cord Replacement

If the supply cord is damaged, it must be replaced by the manufacturer or its service agent or a similarly qualified person in order to avoid a hazard.

Precaution

This fridge-larder must be properly installed and located in accordance with the Installation Instruction before it is used.

Never unplug your fridge-larder by pulling on the power cord. Always grip plug firmly and pull straight out from the outlet.

When moving your appliance away from the wall, be careful not to roll over or damage the power cord.

Pull out the power plug prior to cleaning the fridge-larder
Never damage, severely bend, pull out, or twist the power cord because power cord damage may cause a fire or electronic shock.

Don't use an extension cord

If possible, connect the fridge-larder to its own individual electrical outlet to prevent it and other appliances or household lights from causing an overload.

⚠ Danger

Risk of child entrapment.
Before you throw away your old refrigerator :
Take off the doors.
Leave the shelves in place so that children may not easily climb inside.

Grounding (Earthing)

In the event of an electric short circuit, grounding (earthing) reduces the risk of electric shock by providing an escape wire for the electric current. In order to prevent possible electric shock, this appliance must be grounded. Improper use of the grounding plug can result in an electric shock.

Consult a qualified electrician or service person if the grounding instructions are not completely understood, or if you have doubts on whether the appliance is properly grounded.

⚠ Warning

- ⚠ Keep ventilation openings, in the appliance enclosure or in the built-in structure, clear of obstruction.
- ⚠ Do not use mechanical devices or other means to accelerate the defrosting process, other than those recommended by the manufacturer.
- ⚠ Do not damage the refrigerant circuit.
- ⚠ Do not use electrical appliances inside the food storage compartments of the appliance, unless they are of the type recommended by the manufacturer.
- ⚠ The refrigerant and insulation blowing gas used in the appliance require special disposal procedures.
  At disposal, please consult with service agent or a similarly qualified person.

Disposal of the old appliance & packing of new appliance

Disposal of the old appliance

The old appliance whose life has expired should be destroyed in order to make it safe prior to disposal. Take out power plugs, separate connection wires and remove or destroy all springs, latches or bolting, to prevent children from being trapped during play.

For environmental protection, old refrigerators should be disposed off by a professional disposition agency. If you have any question, please consult with the local sale agency or local authority.

Disposal of packing of new appliance

All packing materials used for this appliance are environment-friendly.

Matters concerning material are as follows:

- PE: Polyethylene – Foil or pocket for packing
- PS: Formed objects made of foamed CFC-FREE polystyrene
- PP: Strapping tape made of polypropylene

Take back offer

This appliance contains fluid (refrigerant, lubricant) and is made of parts and materials which are reusable and/or recyclable.

All the important materials should be sent to the collection center of waste material and can be reused after rework (recycling). For take back, please contact with the local agency.

Identification of Parts

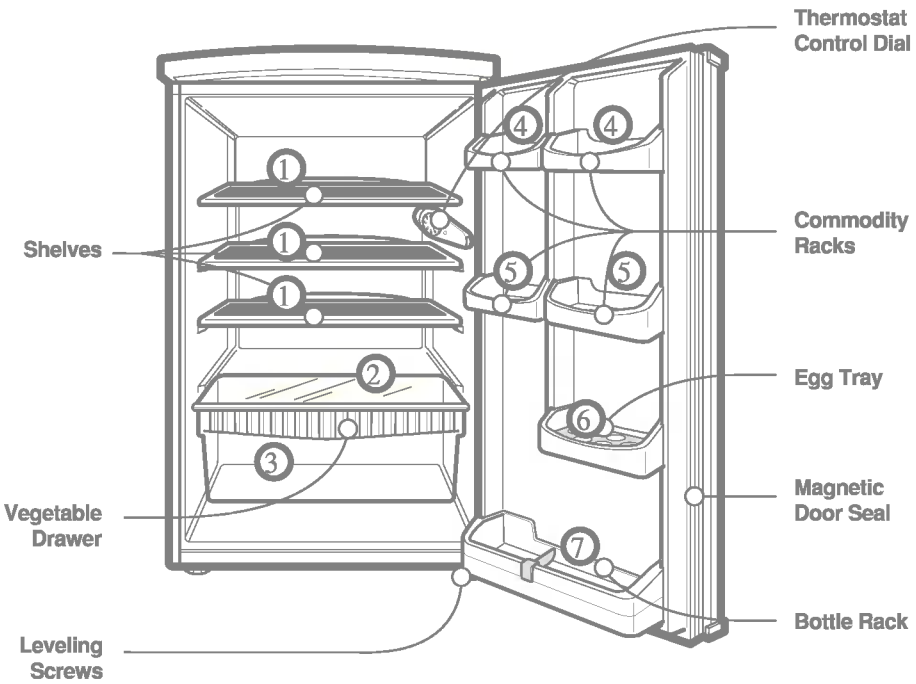

This is a basic model. The shape of refrigerator is subject to change.

Location

This appliance is suitable for using at ambient temperature between +16°C and +32°C. If the ambient temperature drops below +16°C, it is possible that the freezing foods in the freezer compartment are thawed because the temperature of the freezer gets warm.

We recommend that the refrigerator be installed at a dry and well ventilated place. Make sure that the appliance is not exposed to direct sunlight or placed in vicinity of a heat source such as stove, heaters, radiator. If it is impossible, make use of an adequate plate (not asbestos) or at least the following minimum distance must be secured.

from a Gas or electric cooker : 3cm
from oil or coal-fired stoves : 30cm
from another refrigerating appliance : 2cm

Place on a flat and firm flooring. If the floor is not even, adjust the feet by using the leveling screw at the front edge of the cabinet.

If the front is slightly higher than the rear, the door can close more easily.

Installation with/ without top table

Check that the hot air caused to warm air from the rear of the appliance circulates without obstruction. If not, it could cause the output of the refrigerating unit to increase and this will result in a higher rate of energy consumption. Therefore, confirm that ventilation grill is never covered or blocked.

1. when installing with top table(free standing), push the refrigerator until the air circulating hole of top table nearly reaches the wall.
2. when installing without top table, align the door front edge to the front edge of kitchen furniture.

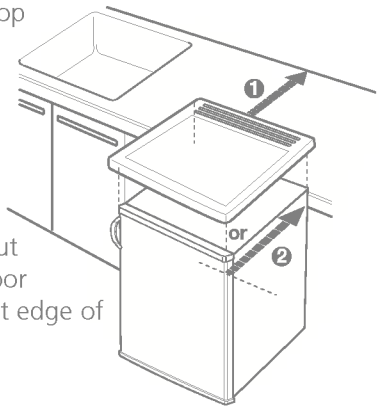

How to Remove Top Table

1. Unscrew 2 bolts at the rear of top table.
2. Hold the rear of top table and push forwards by lifting up top table slightly.

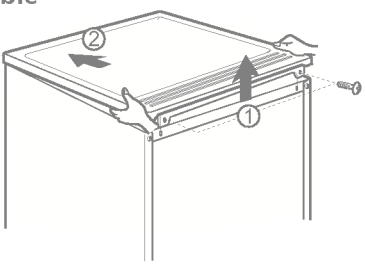

Electrical connection

This appliance should be connected to the mains AC 220~240V , 50 Hz. You must connect this appliance only to the power socket with grounding complying with the related regulations and only an approved expert should install this appliance.

Door Handle

In case of installing the door handle, refer to a figure enclosed with it in a product package.

Starting

Before switching it on, leave the appliance standing for at least 2 hours, so that the circulation of the refrigerant stabilizes and no operating problems occur.

Turn the temperature control dial from the position "0". The refrigerating process begins and the lamp inside refrigerator goes on when the door is opened.

Controlling the temperature

We recommend to set the dial "4" for normal.

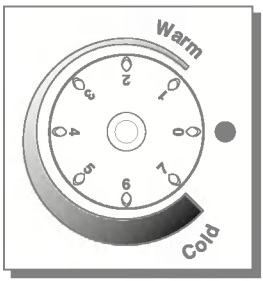

Too warm: Turning the temperature control dial clockwise will set to a colder setting (higher number setting).

Too cool: Turning the temperature control dial counterclockwise will set to a warmer setting (lower number setting).

The temperature setting depends on ambient temperature, the quantity of foods, how often the door is opened. So the temperature setting should be checked by using an appropriate thermometer and following the instructions on it.

Switching off

Turn the temperature control dial counterclockwise until set to "0". The refrigerating process stops and the lamp inside refrigerator goes off.

Storing food

Opening the door often or keeping the door opened a long time, increases the inside temperature. This causes the storage life and flavor of the foods to reduce, and increases the energy consumption.

Arranging food

- Store the food products that give off odor in closed containers and wrap.
- Use aluminum foil, plastic foil and metal or glass containers as the packing material for foods.
- Allow warm foods to cool down sufficiently before placing inside the appliance.
- Keep high-proof alcoholic beverages in airtight bottles and upright position.
- Do not store the products (melon, banana, pineapple etc) which are likely to go bad at low temperature.

<Refer to the Figure of page 7>

①Bread, ready-cooked meals.
②Meat, Sausages, Slice products.
③Vegetables, Fruit, Salad produce.
④Butter, Cheese.
⑤Small glasses or bottles, cans, spices.
⑥Eggs.
⑦Large beverage bottles.

Make sure the door is closed properly.

Defrosting

Defrosting the fridge compartment

When the refrigerator is working, frost is formed at the rear wall of the fridge compartment and melts automatically when the compressor stops. The thawed water is collected in the discharge gutter and evaporates by heat of the compressor.

Never place electrical devices in the refrigerator for defrost. Take care when using defrosting sprays for assisting defrosting. These sprays include substances containing explosive gas, or harmful for synthesis or human health.

Cleaning

⚠ Warning

Always remove plugs or Switch off supply before cleaning.

Do not use sharp objects (such as knife, screwdriver) which could break refrigerant circuit resulting in environmental and health risks.

Never use steam cleaner or steam pressure cleaner since hot steam may damage refrigerator surface and electrical devices. Never use sand, abrasive detergent, acid or chemical solvent.

- The most appropriate time for cleaning of the freezer compartment is a time after defrosting.
- Care should be taken that cleaning water does not enter the inside of the thermostat Enclosure or lamp.
- Clean refrigerator including inside devices with clothes or lukewarm water. You may use commercial detergent for tableware.

Regularly clean the heat exchanger on the rear side of refrigerator using a smooth brush so that accumulations of dusts and residues. Do not disrupt expansion from the inside and cause increased energy consumption.

Any damage to the heat exchanger or other events leading to the exposure of the refrigerant to the environment, should be avoided because of potential environment and health risks.

General information

Going away

When you plan to be away for an extended period, remove all food, disconnect the power cord, clean the interior thoroughly, and leave the door OPEN to prevent odor formation.

Power failure

Most power failures are corrected in an hour or two and will not affect your refrigerator temperatures. However, you should minimize the number of door openings while the power is OFF.

If you move

Remove all items inside the refrigerator or securely fasten all loose items. To avoid damaging the leveling screw, turn them all the way into the base.

Anti-condensation pipe

- The Anti-condensation pipe is installed around the front side of fridge-larder to prevent dewing.
- Especially after installation or when ambient temperature is high, the fridge-larder may feel hot, which is quite normal.

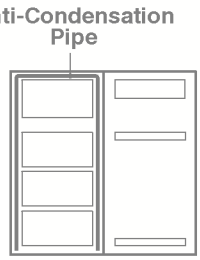

Lamp Replacing

Unplug the power cord from the AC outlet.

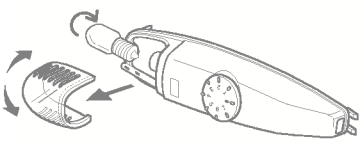

1. Take the shelves out to make access easier.
2. Hold the cover lamp, take it out softly from the thermostat enclosure with twisting up and down.
3. Turn the lamp counterclockwise, and replace it (max 15W, 220~240V)
4. Assemble in reverse order of disassembly. Replacement bulb must be the same specification as original.

Tips for saving Energy

- After moving the appliance, allow 2 hours to turn on again.
- Do not place the appliance near radiator, stove, and heat sources. If ambient temperature is high, the compressor will run longer.
- Place the appliance on a cool and well ventilated room. Do not expose to direct sunlight.
- Do not keep the door opened too long.
- Do not place warm food and beverages in appliance. Please cool down first otherwise the steam from hot foodstuffs would contribute to the icing up of the evaporator unit; and the cooling period should be as short as possible, for health and hygiene reasons.
- Do not set the temperature of appliance lower than needed.
- Replace magnetic door gasket of the door if it is not properly functioning.

Before calling for service, check this list.
It may save you both time and expense.
This list includes common occurrences that are not the result of defective workmanship or materials in this appliance.

Fridge-Larder does not operate	• **Power plug may be unplugged from the electric outlet.** Plug it in securely. • **House fuse has blown or circuit breaker has tripped.** Check and/or replace fuse and reset circuit breaker. • **Power cut.** Check house lights.
Vibration or Rattling or Abnormal Noise	• **The floor on which the fridge-larder is installed may be uneven or the fridge-larder may be unstable.** Make it even by rotating the leveling screw. • **Unnecessary objects placed in the back side of the fridge-larder.**
Temperature of foods inside refrigerator is not cold enough	• **Too frequent or too long door openings.** **There is a heat source near Fridge-larder.** **A large quantity of food was placed inside the fridge compartment.**
The inner light does not work	• **The temperature controller is on setting "O".** **The bulb is defective.** Refer to "Section of Lamp Replacing"
The temperature inside the refrigerator is too cold	• **The temperature controller is setting to extremely high figure.**

Fridge has odor	• **Foods with strong odors should be tightly covered or wrapped** • **Check for spoiled food** • **Interior needs cleaning** • **Refer to "Cleaning Section"**
Moisture forms on cabinet surface	• **This phenomenon is likely to occur in a wet space.** Wipe it with a dry towel
Interior light does not work	• **No power at outlet.** • **Light lamp needs replacing.** Refer to the Lamp Replacement section.

How to Reverse the Door

Your refrigerator is designed with a reversible door, so you may open from either left or right. It is best to reposition the door hinge as necessary at the outset since it is inconvenient to do so later.
To change the door hinge please refer to the diagram below and proceed as follows.

Precaution

1. First unplug the appliance.
2. Remove foods and accessories like shelves or trays which are not fixed in the refrigerator.
3. Carefully lay the appliance on a cushion like packing material to avoid the damage of refrigeration circuit.
4. Use '+' driver or spanner to fix or remove the bolts.

1. Unscrew the 2xBOLTS ①, then remove the hinge (L) ②.
2. Remove the LEG ③.
3. Gently pull the door downwards to remove it.
4. Before refitting the door, swap the Hinge Cap ④ by pulling it out from its current location and repositioning it on the other side of the door. Care should be taken not to damage the adjacent surfaces when removing the Hinge Cap.
5. Unscrew the Upper Hinge pin (U) ⑤ and screw it into the opposite side hole.

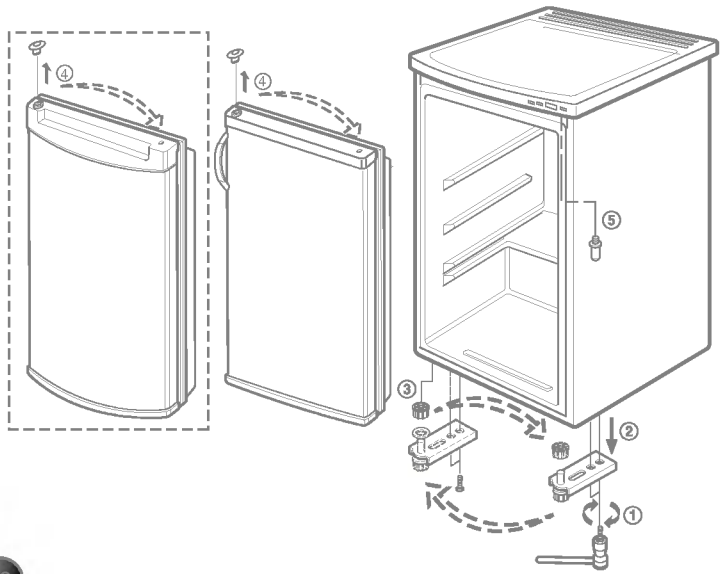

How to Reverse the Door

6. After refitting the door, fix the Lower Hinge(L) in the opposite side by using 2xBOLTS.
7. Fix the Leg.
8. Carefully place the appliance in an upright position. Adjust the Leveling screw to make sure the appliance is steady and check that the door opens and closes properly.

In case of applying Reversible door, when you close the door with excessive force, there could be the case that the door doesn't close because of Reaction force. Please ascertain if the door closes properly.

Door handle(Option)

