website http://www.lgservice.co
e-mail http://www.lgeservice.c up.html

MULTI V™ System
Heat Pump Outdoor Unit
INSTALLATION MANUAL

MODELS: CRUN Series

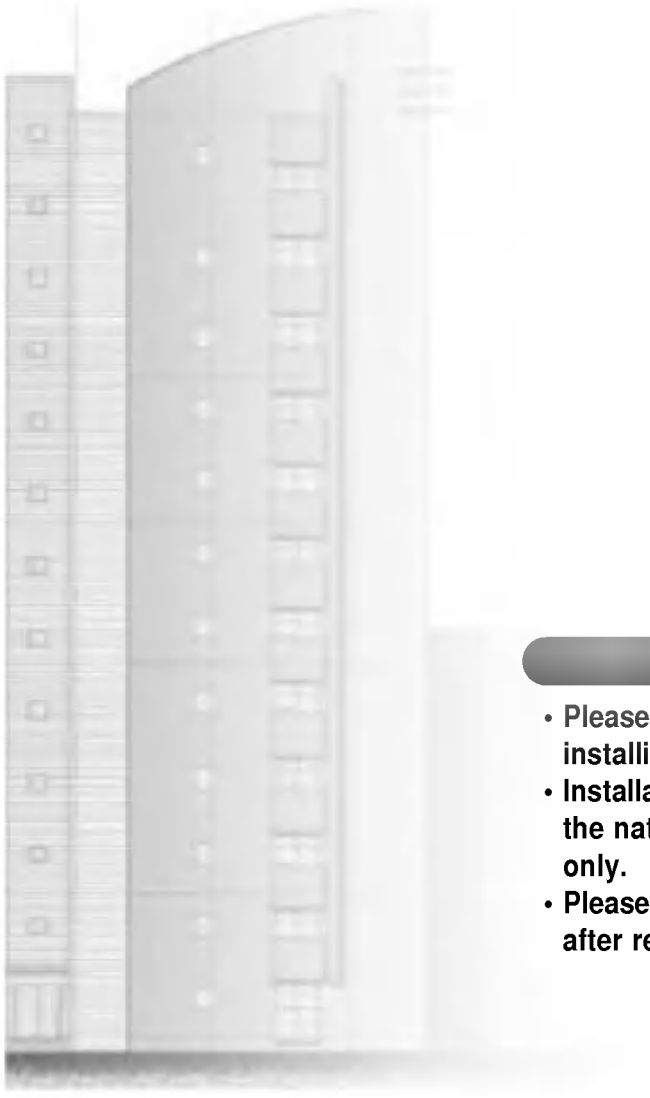

- Please read this installation manual completely before installing the product.
- Installation work must be performed in accordance with the national wiring standards by authorized personnel only.
- Please retain this installation manual for future reference after reading it thoroughly.

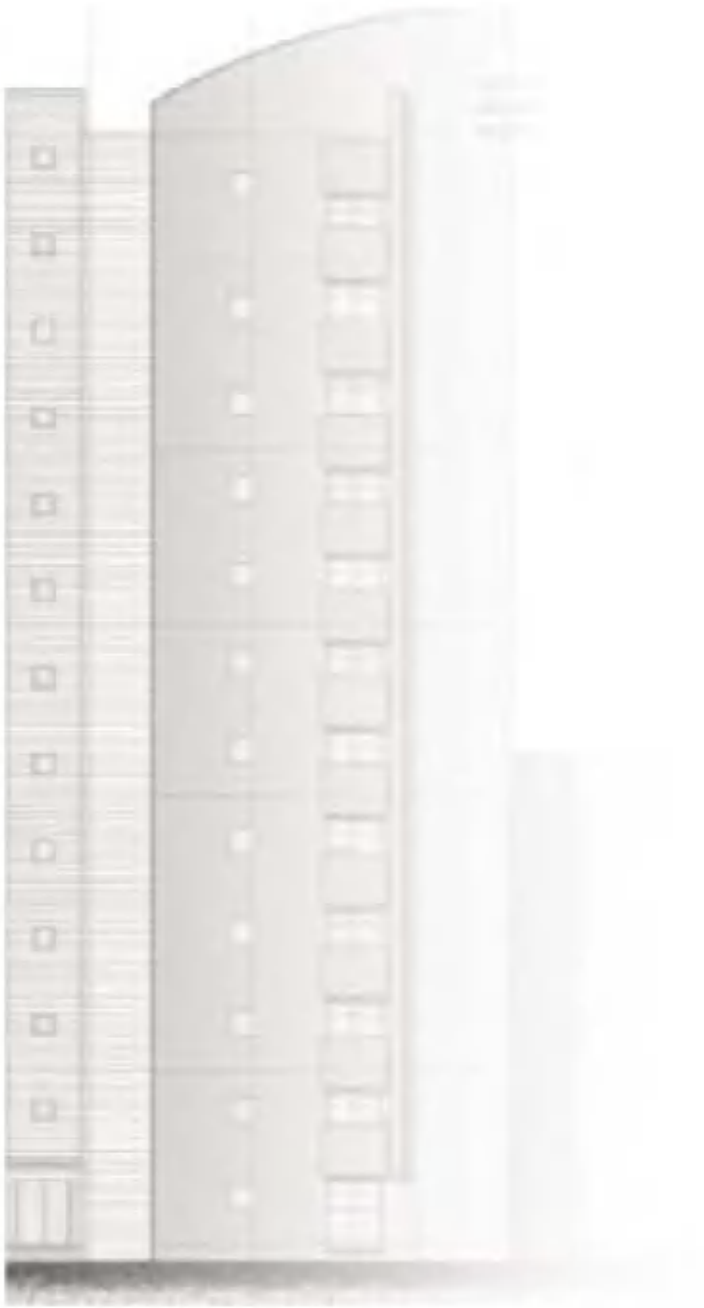

Safety Precautions.....3

Installation Process 10

Combination of indoor and Outdoor Units.....11

Selection the Best Location.....12

Installation Space 13

Lifting Method 16

Installation 17

Refrigerant Pipe Installation 19

Elecrical wiring.....33

Test Run.....45

Appendix.....50

System Check List 58

To prevent injury to the user or other people and property damage, the following instructions must be followed.

- Be sure to read before installing the air conditioner.
- Be sure to observe the cautions specified here as they include important items related to safety.
- Incorrect operation due to ignoring instruction will cause harm or damage. The seriousness is classified by the following indications.

⚠WARNING	This symbol indicates the possibility of death or serious injury.
⚠CAUTION	This symbol indicates the possibility of injury or damage to properties only.

- Meanings of symbols used in this manual are as shown below.

	Be sure not to do.
	Be sure to follow the instruction.
	Indicates a part which must be grounded.
	Indicates that caution should be taken with rotating parts. (This symbol is displayed on the main unit label.) <Color: Yellow>
	Indicates that the main switch must be turned off before servicing. (This symbol is displayed on the main unit label.) <Color: Blue>
	Beware of electric shock (This symbol is displayed on the main unit label.) <Color: Yellow>
	Beware of hot surface (This symbol is displayed on the main unit label.) <Color: Yellow>
ELV	Please pay attention to electric shock. And at servicing, please shut down the power supply for both of Indoor Unit and Outdoor Unit.

⚠ WARNING Carefully read the labels affixed to the main unit.

⚠WARNING

Ask the dealer or an authorized technician to install the air conditioner.

- Improper installation by the user may result in water leakage, electric shock, or fire.



Install the air unit at a place that can withstand its weight.

- Inadequate strength may cause the unit to fall down, resulting in injuries.



Use the specified cables for wiring. Make the connections securely so that the outside force of the cable is not applied to the terminals.

- Inadequate connection and fastening may generate heat and cause a fire.

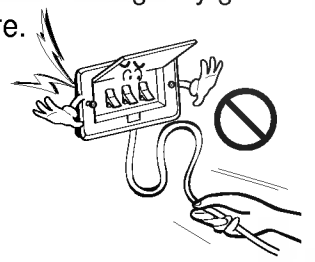

Prepare for typhoons and other strong winds and earthquakes and install the unit at the specified place.

- Improper installation may cause the unit to topple and result in injury.



Always use accessories specified by LG Electronics.

- Ask an authorized technician to install the accessories. Improper installation by the user may result in water leakage, electric shock, or fire.

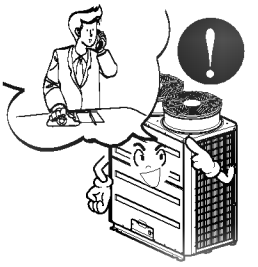

Never repair the unit. If the air conditioner must be repaired, consult the dealer.

- If the unit is repaired improperly, water leakage, electric shock, or fire may result.



- Improper handling may result in injury.

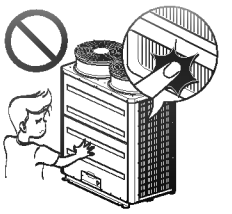

If refrigerant gas leaks during installation work, ventilate the room.

- If the refrigerant gas comes into contact with a flame, poisonous gases will be released.

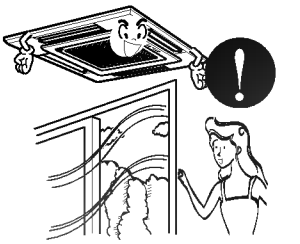

Install the air conditioner according to this Installation Manual.

- If the unit is installed improperly, water leakage, electric shock, or fire may result.



Have all electric work done by a licensed electrician according to "Electric Facility Engineering Standard" and "Interior Wire Regulations" and the instructions given in this manual and always use a special circuit.

- If the power source capacity is inadequate or electric work is performed improperly, electric shock and fire may result.

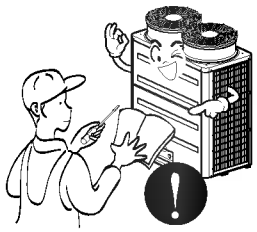

Securely install the cover of control box and the panel.

- If the cover and panel are not installed properly, dust or water may enter the outdoor unit and fire or electric shock may result.

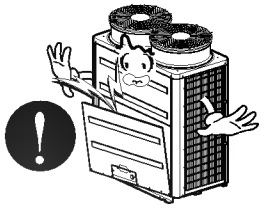

When installing and moving the air conditioner to another site, do not charge it with a refrigerant different from the refrigerant (R407C) specified on the unit.

- If a different refrigerant or air is mixed with the original refrigerant, the refrigerant cycle may malfunction and the unit may be damaged.



If the air conditioner is installed in a small room, measures must be taken to prevent the refrigerant concentration from exceeding the safety limit when the refrigerant leaks.

- Consult the dealer regarding the appropriate measures to prevent the safety limit from being exceeded. Should the refrigerant leak and cause the safety limit to be exceeded, hazards due to lack of oxygen in the room could result.

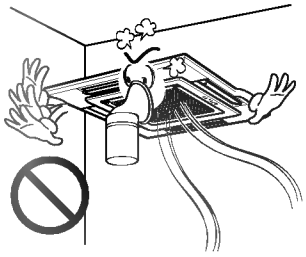

When moving and reinstalling the air conditioner, consult the dealer or an authorized technician.

- If the air conditioner is installed improperly, water leakage, electric shock, or fire may result.



After completing installation work, make sure that refrigerant gas is not leaking.

- If the refrigerant gas leaks and is exposed to a fan heater, stove, oven, or other heat source, it may generate noxious gases.

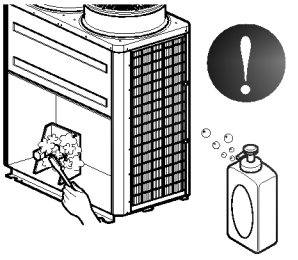

Do not reconstruct or change the settings of the protection devices.

- If the pressure switch, thermal switch, or other protection device is shorted and operated forcibly, or parts other than those specified by LG Electronics are used, fire or explosion may result.

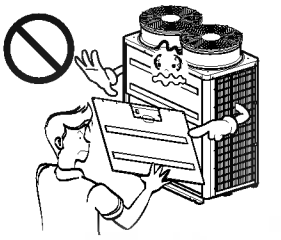

⚠CAUTION

Do not install the unit where combustible gas may leak.

- If the gas leaks and accumulates around the unit, an explosion may result.

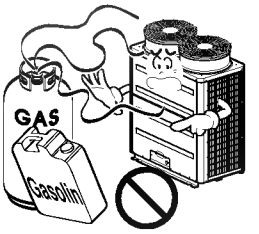

Do not use the air conditioner where food, pets, plants, precision instruments, or art-work are kept.

- The quality of the food, etc. may deteriorate.

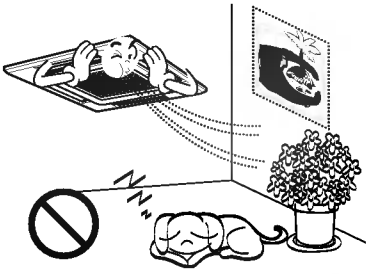

Do not use the air conditioner in special environments.

- Oil, steam, sulfuric smoke, etc. can significantly reduce the performance of the air conditioner or damage its parts.

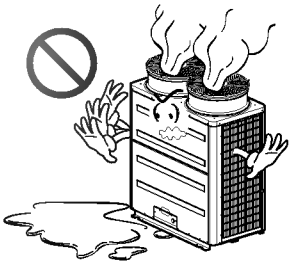

When installing the unit in a hospital, communication station, or similar place, provide sufficient protection against noise.

- The inverter equipment, private power generator, high-frequency medical equipment, or radio communication equipment may cause the air conditioner to operate erroneously, or fail to operate. On the other hand, the air conditioner may affect such equipment by creating noise that disturbs medical treatment or image broadcasting.

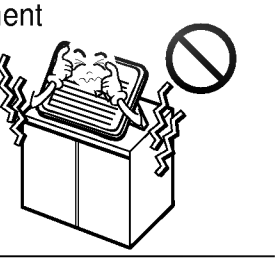

Do not install the outdoor unit at the outside of apartment balcony or veranda or the site of the same installation condition

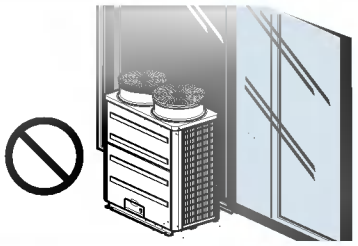

Do not install the unit beside or on the footway which may be flooded or submerged and may be an obstructions for pedestrians to walk.

- In case that inevitably install the unit beside the footway, it may cause a problem for your neighbors.



Do not install the unit on a structure that may cause leakage.

- When the room humidity exceeds 80% or when the drain pipe is clogged, condensation may drip from the indoor unit. Perform collective drainage work together with the outdoor unit, as required.

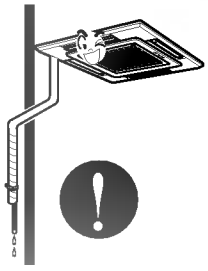

Take measures to prevent children from touching the unit.

- Injuries such as cuts could occur if a child touches the surface of the fins on the heat exchanger.

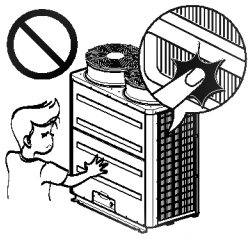

⚠CAUTION

- Do not connect the ground wire to gas or water pipes, lightning rods, or telephone ground lines. Improper grounding may result in electric shock.

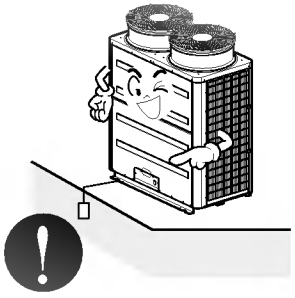

Install the power cable so that tension is not applied to the cable.

- Tension may cause the cable to break and generate heat and cause a fire.

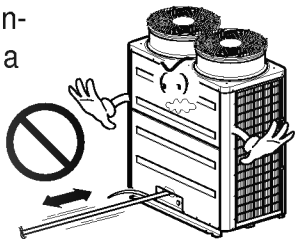

Install a leakage circuit breaker, as required.

- If a leakage circuit breaker is not installed, electric shock may result.

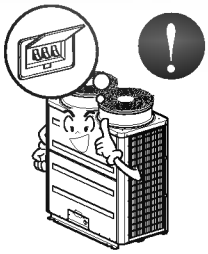

Use power cables of sufficient current carrying capacity and rating.

- Cables that are too small may leak, generate heat, and cause a fire.

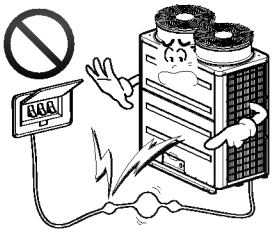

Use only a circuit breaker and fuse of the specified capacity.

- A fuse or circuit breaker of a larger capacity or a steel or copper wire may result in a general unit failure or fire.

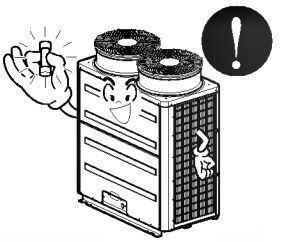

- Washing them may cause an electric shock.

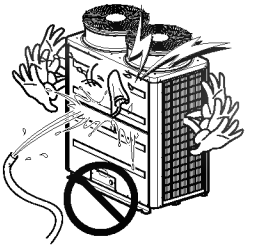

Be careful that the installation base is not damaged by long use.

- If the damage is left uncorrected, the unit may fall and cause personal injury or property damage.

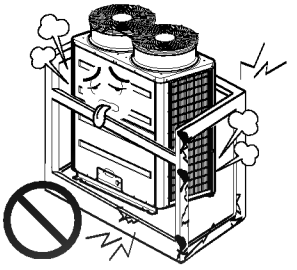

Install the drain piping according to this Installation Manual to ensure proper drainage. Wrap thermal insulation around the pipes to prevent condensation.

- Improper drain piping may cause water leakage and damage to furniture and other possessions.



- Only one person should not carry the product if it weighs more than 20 kg.
- Some products use PP bands for packaging. Do not use any PP bands for a means of transportation. It is dangerous.
- Do not touch the heat exchanger fins, which may result in injury.
- When transporting the outdoor unit, suspend it at the specified positions on the unit base. Also support the outdoor unit at four points so that it cannot slip sideways.



- Packing materials, such as nails and other metal or wooden parts, may cause stabs or other injuries.
- Tear apart and throw away plastic packaging bags so that children will not play with them. If children play with a plastic bag which was not torn apart, they face the risk of suffocation.



⚠CAUTION

Turn on the power at least 12 hours before starting operation.

- Starting operation immediately after turning on the main power switch can result in severe damage to internal parts. Keep the power switch turned on during the operational season.

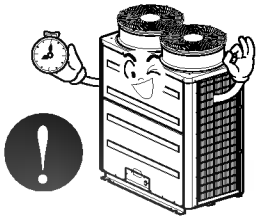

Do not touch the switches with wet fingers.

- Touching a switch with wet fingers can cause an electric shock.

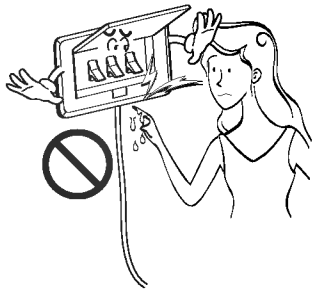

Do not touch the refrigerant pipes during and immediately after operation.

- During and immediately after operation, the refrigerant pipes may be hot or cold, depending on the condition of the refrigerant flowing through the refrigerant piping, compressor, and other refrigerant cycle parts. Your hands may suffer burns or frost-bite if you touch the refrigerant pipes.

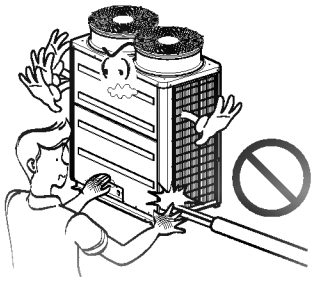

Do not operate the air conditioner with the panels and guards removed.

- Rotating, hot, or high-voltage parts can cause injuries.



- Always wait at least five minutes before turning off the power. Otherwise, water leakage and trouble may occur.



Determination of division work	Indicate clearly who is to be responsible for switch settings.
Preparation of contract drawings	Make relationship between outdoor, indoor, remote controller, and option connections clear.(Prepare control circuit diagram)
Sleeve and insert work	Take account of gradient of drain piping.
Installation of indoor unit	Check model name to make sure the fitting is made correctly.
Refrigerant piping work	Special attention to dryness, cleanness and tightness.
Drain pipe work	Adjust to downward gradient.
Duct work	Make sure airflow is sufficient.
Heat insulation work	Make sure no gaps are left where the insulating materials are joined.
Electrical work (connection circuits and drive circuits)	Multiple core cable must not be used.(suitable cable should be selected)
Outdoor unit foundation work	The foundation must be level.
Installation of outdoor unit	Avoid short circuits and ensure sufficient space is allowed for service.
All tight test	In the final check for 24hours at 3MPa(30.0 kg/cm^2) there must be no drop in pressure.
Vacuum drying	The vacuum pump must have a capacity of reaching at least 5mmHg, 3hours
Additional charge of refrigerant	Recharge correctly as calculated in this manual, and record the amount of additional refrigerant.
Fit facing panels	Make sure there are no gaps left between the facing materials used on the ceiling.
Automatic addressing of indoor unit	Refer to automatic addressing flowchart.
Test run adjustment	Run each indoor unit in turn to make sure the pipe work has been fitted correctly.
Transfer to customer with explanation	Explain the use of the system as clearly as possible to your customer and make sure all relevant documentation is in order.

The above list indicates the order in which the individual work operations are normally carried out but this order may be varied where local conditions warrants such change.

- The total capacity index of indoor units is the sum of capacity index of each units and should be within the capacity index of the outdoor unit.

Model Name of Outdoor Unit	Range of Total Capacity Index
CRUN458S0	22 ~ 50 (50 ~115%)
CRUN1008T0	48~125 (50 ~ 130%)

Capacity			Model Name of Indoor Unit			
Index	kW	Btu/h	Ceiling Mounted Cassette Type(one way)	Ceiling Mounted Cassette Type(four way)	Ceiling concealed Duct Type (Low-Static)	Ceiling concealed Duct Type (High-Static)
7	2.1	7,000	CRNN076TCA0	-	CRNN076BNG0	-
9	2.6	9,000	CRNN096TCA0	-	CRNN096BJG0	-
12	3.5	12,000	CRNN126TCA0	CRNN126TEA0	CRNN126BJG0	-
18	5.3	18,000	-	CRNN186TEA0	-	CRNN186BHA0
24	7.0	24,000	-	CRNN246TDA0	-	CRNN246BHA0
28	8.2	28,000	-	CRNN286TDA0	-	CRNN286BGA0
36	10.6	36,000	-	CRNN366TDA0	-	CRNN366BGA0
42	12.3	42,000	-	CRNN426TDA0	-	CRNN426BGA0
48	14.1	48,000	-	CRNN486TDA0	-	CRNN486BEA0

Capacity			Model Name of Indoor Unit					
Index	kW	Btu/h	Convertible Type	Wall Mounted Type	Art Cool Type	Art Cool Type (Wide)	Art Cool Type (Deluxe)	Floor Standing Type (With Case)
7	2.1	7,000	-	CRNN076SRA0	-	-	CRNN076SU*0	CRNN076CAA0
9	2.6	9,000	-	CRNN096SRA0	CRNN096SP*0	-	CRNN096SU*0	CRNN096CBA0
12	3.5	12,000	-	CRNN126SRA0	CRNN126SP*0	CRNN126SV*0	CRNN126SU*0	CRNN126CBA0
18	5.3	18,000	CRNN186VBA0	CRNN186STA0	-	CRNN186SV*0	-	CRNN186CCA0
24	7.0	24,000	CRNN246VBA0	-	-	-	-	CRNN246CDA0

Note:

1. The mark [*] presents the color of the front panel.
   ① Art Cool Type/Art Cool Type(Wide)
   B: Blue D: Wood M: Metal
   ② Art Cool Type(Deluxe)
   R: Mirror G: Gold B: Blue
2. Combinations in which the total capacity of the connected indoor units exceeds the capacity of the outdoor unit will reduce the capacity of each indoor unit below the rated capacity during simultaneous operation. Therefore, if circumstances allows, combine indoor units within the capacity of outdoor unit.

Select space for installing outdoor unit, which will meet the following conditions:

- No direct thermal radiation from other heat sources
- No possibility of annoying the neighbors by noise from unit
- No exposition to strong wind
- With strength which bears weight of unit
- Note that drain flows out of unit when heating
- Space out for air passage and service work.
  Do not install unit to the space where generation, inflow, stagnation, and leak of combustible gas is expected.
- Avoid unit installation in a place where acidic solution and spray (sulfur) are often used.
- Do not use unit under any special environment where oil, steam and sulfuric gas exist.
- Installation restriction on outdoor unit when the outdoor air temperature is -5°C or lower on cooling operation.
- It is recommended to fence round the outdoor unit in order to prevent any person or animal from accessing the outdoor untit.
- If installation site is area of heavy snowfall, then the following directions should be observed.
  - Make the foundation as high as possible.
  - Fit a snow protection hood.

For CRUN1008T0

Basic space required

A space of at least 250 mm is necessary at the back for inlet air. Taking servicing, etc. from the rear into account, a space of about 500 mm should be provided, the same as at the front.

Ⓐ 250 mm or more
Ⓑ 500 mm or more
Ⓒ Front panel
Ⓓ Top discharge (open in principle)
Ⓔ Side inlet (open in principle)
Ⓕ Rear inlet (open in principle)

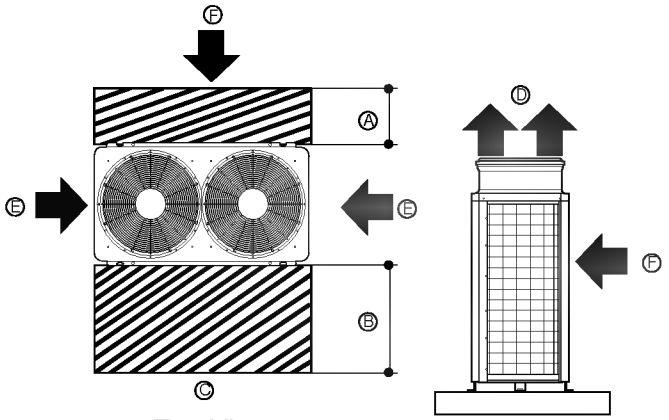

<Top View> <Side View>

When inlet air enters from right and left sides of unit

Ⓐ 500 mm or more
Ⓑ 250 mm or more
Ⓒ Back(HEX side)
Ⓓ 150 mm from the wall

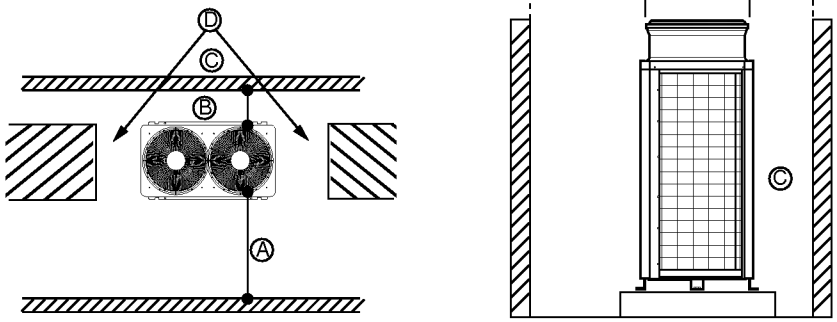

<Side view>

When unit is surrounded by walls

Ⓐ 500 mm or more
Ⓑ 250 mm or more
Ⓒ Back(HEX side)

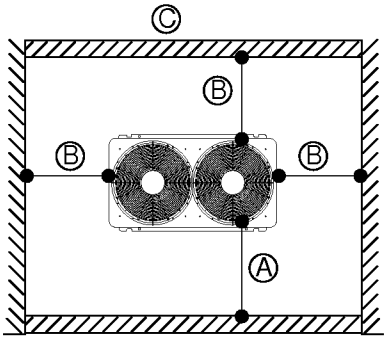

When there is an obstruction above the unit

Ⓐ 45° or more
Ⓑ 300 mm or more
Ⓒ 250 mm or more
Ⓓ 1000 mm or more
Ⓔ Air outlet guide (Procured at the site)
Ⓕ 250 mm or more

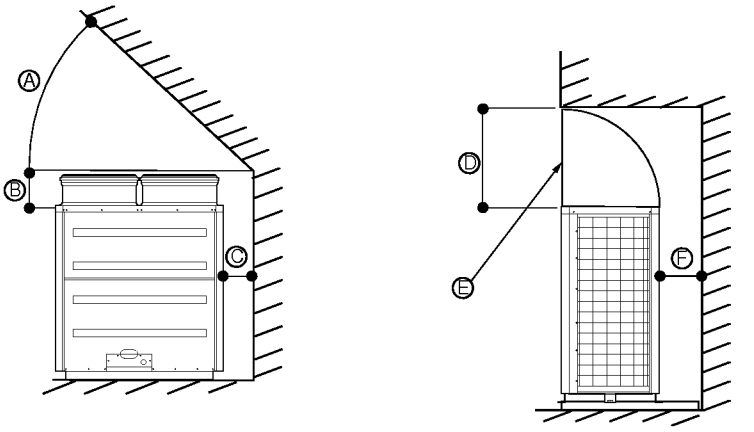

For CRUN458S0

- If an awning is built over the unit to prevent direct sunlight or rain exposure, be careful that heat radiation from the condenser is not restricted.
- There should not be any animals or plants which could be affected by hot air discharged.
- Ensure the spaces indicated by arrows from the wall, ceiling, fence or other obstacles.

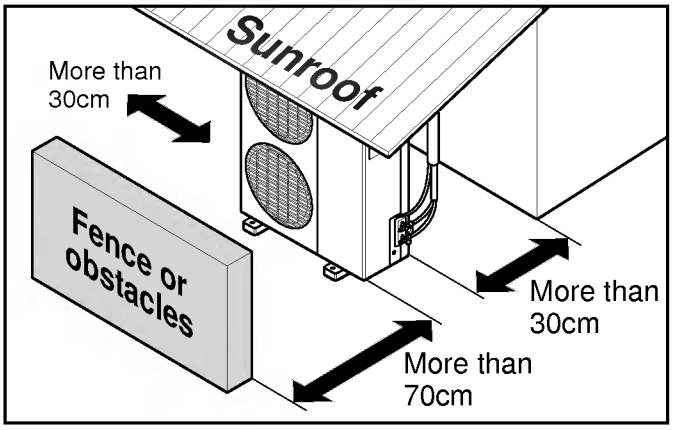

Space required for collective installation and continuous installation:When installing several units, leave the space between each block as shown below considering passage for air and people.

Ⓐ (Must be open)
Ⓑ Front(panel side)
Ⓒ 500 mm or more
Ⓓ 150 mm or more
Ⓔ 250 mm or more
Ⓕ 600 mm or more

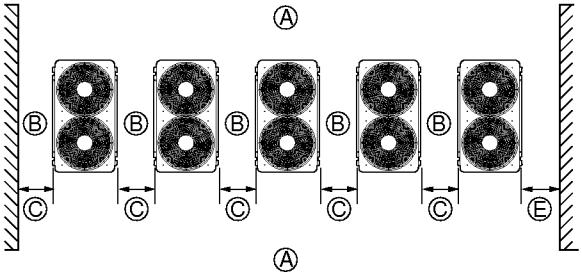

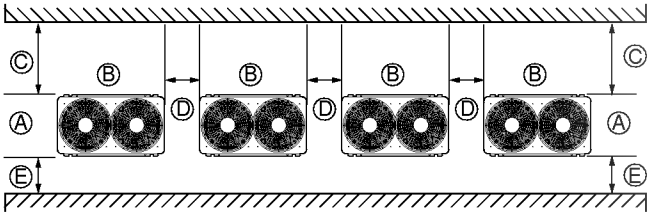

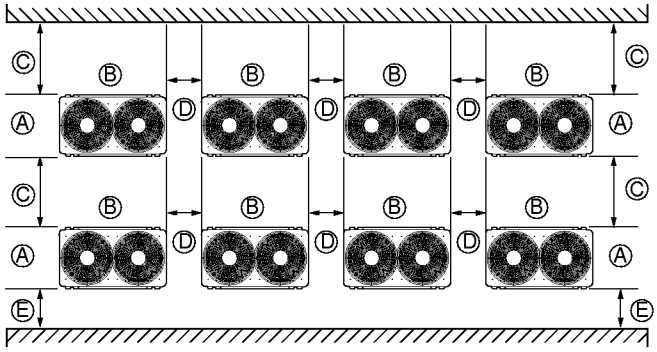

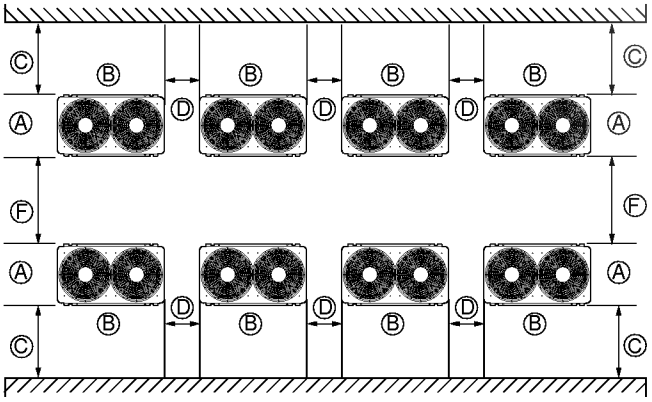

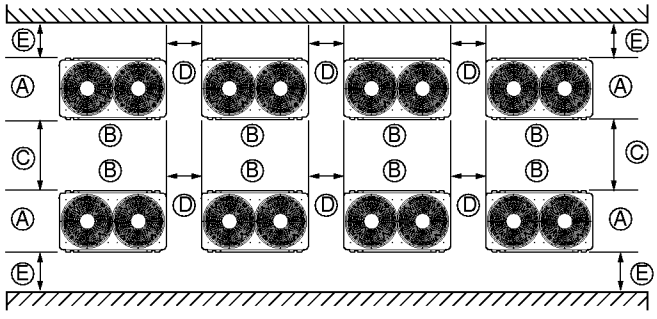

• When carrying the unit suspended, pass the ropes under the unit and use the two suspension points each at the front and rear.

• Always lift the unit with ropes attached at four points so that impact is not applied to the unit.

• Attach the ropes to the unit at an angle of 40° or less.

• Use two ropes at least 7 m long.

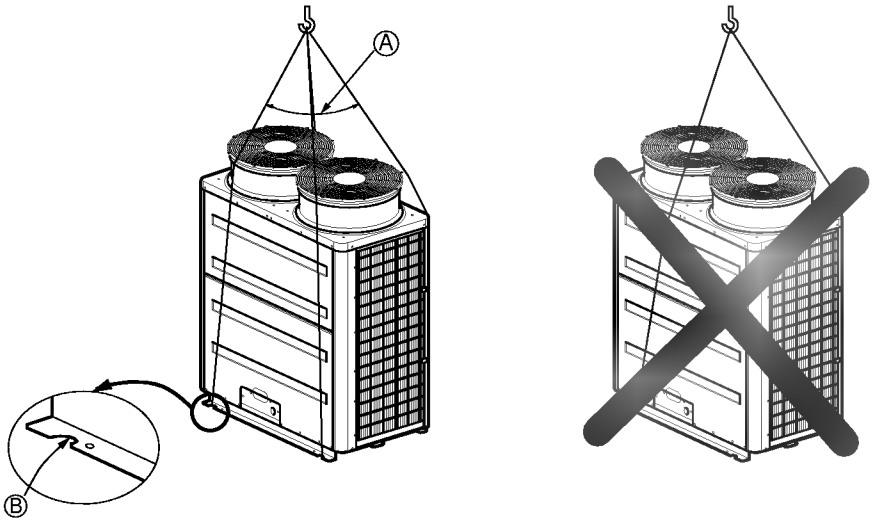

Ⓐ 40° or less
Ⓑ Rope suspension part

Weight of product:

CRUN1008T0	CRUN458S0
300 kg	125kg

CAUTION

Be very careful to carry product.

- Do not have only one person carry product if it is more than 20 kg.
- PP bands are used to pack some products. Do not use them as a mean for transportation because they are dangerous.
- Do not touch heat exchanger fins with your bare hands. Otherwise you may get a cut in your hands.
- Tear plastic packaging bag and scrap it so that children cannot play with it. Otherwise plastic packaging bag may suffocate children to death.
- When carrying in outdoor unit, be sure to support it at four points. Carrying in and lifting with 3-point support may make outdoor unit unstable, resulting in a fall of it.

CRUN1008T0

• Individual installation

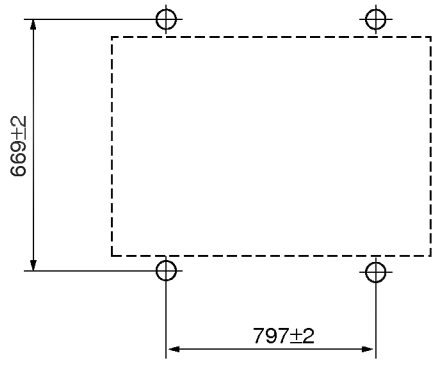

• Example of collective installation

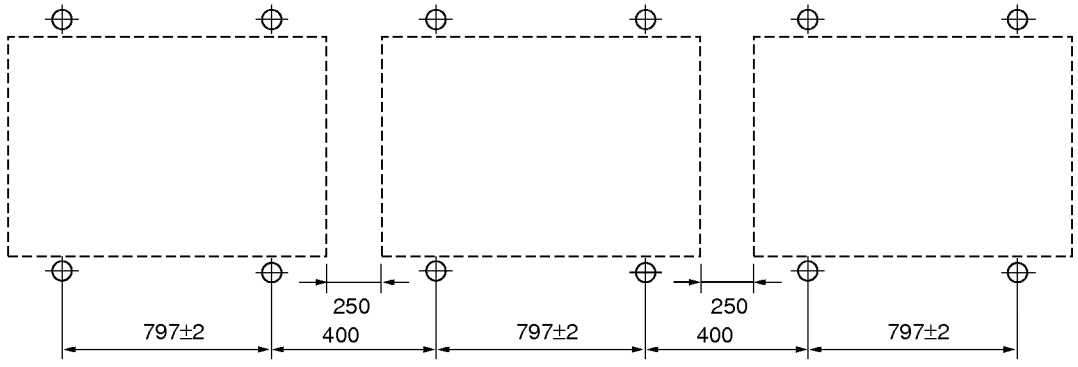

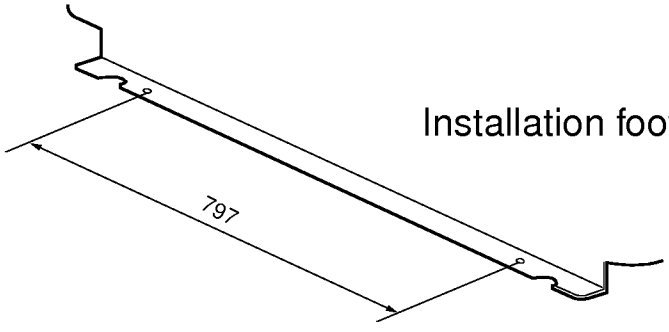

CRUN1008T0

- Fix the unit tightly with bolts as shown below so that unit will not fall down due to earthquake or gust.
- Use concrete or angle for foundation of unit.
- Vibration may be transmitted to the installation section and noise and vibration may be generated from the floor and walls, depending on the installation conditions. Therefore, provide ample vibrationproofing (cushion pads, cushion frame, etc.).

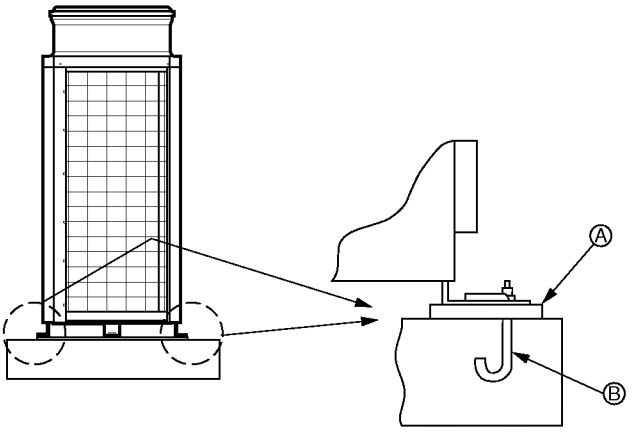

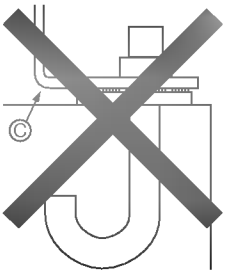

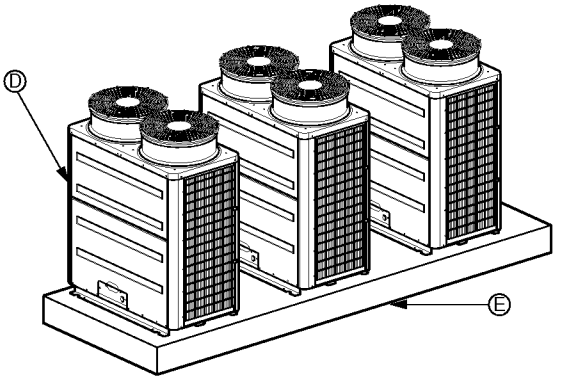

Ⓐ Be sure that the corners are firmly seated. If the corners are not firmly seated, the installation feet may be bent.
Ⓑ M10 anchor bolt procured at the site.
Ⓒ Corner is not seated.
Ⓓ Unit
(Provide ample vibrationproofing between the unit and the foundation by using cushion pads, cushion frame, etc.)
Ⓔ Concrete foundation

⚠ WARNING

- **Be sure to install unit in a place strong enough to withstand its weight. Any lack of strength may cause unit to fall down, resulting in a personal injury.**
- **Have installation work in order to protect against a strong wind and earthquake. Any installation deficiency may cause unit to fall down, resulting in a personal injury.**

When building the foundation, give full attention to the floor strength, drain water disposal (during operation, drain water flows out of the unit), and piping and wiring routes.

The method of connection consists of flare connections at the indoor units, brazing connections for the piping of the outdoor unit. Note that the branched sections are brazed.

WARNING

Always use extreme care to prevent the refrigerant gas (R407C) from the leakage while using fire or flame. If the refrigerant gas comes in contact with the flame from any source, such as a gas stove, it breaks down and generates a poisonous gas which can cause gas poisoning. Never weld in an unventilated room. Always conduct an inspection for gas leakage after installation of the refrigerant piping has been completed.

1. Use the following materials for refrigeration piping.
   • Material: Seamless phosphorous deoxidized copper pipe
2. Commercially available piping often contains dust and other materials. Always blow it clean with a dry inert gas.
3. Use care to prevent dust, water or other contaminants from entering the piping during installation.
4. Reduce the number of bending portions as much as possible, and make bending radius as big as possible.
5. Always use the branch piping set shown below, which are sold separately.

Y branch		Header		
		4 branch	7 branch	10 branch
Less than 3.8kW(13,000 Btu/h)	ARBL052S	ARBL054	ARBL057	-
~8.2kW(28,000 Btu/h)	ARBL052L			
~17.6kW(60,000 Btu/h)	ARBL102S	ARBL104	ARBL107	ARBL1010
17.6kW(60,000 Btu/h) or more	ARBL102L			

6. If the diameters of the branch piping of the designated refrigerant piping differs, use a pipe cutter to cut the connecting section and then use an adapter for connecting different diameters to connect the piping.
7. Always observe the restrictions on the refrigerant piping (such as rated length, the difference between high/low pressures, and piping diameter).
   Failure to do so can result in equipment failure or a decline in heating/cooling performance.
8. A second branch cannot be made after a header. (These are shown by X.)

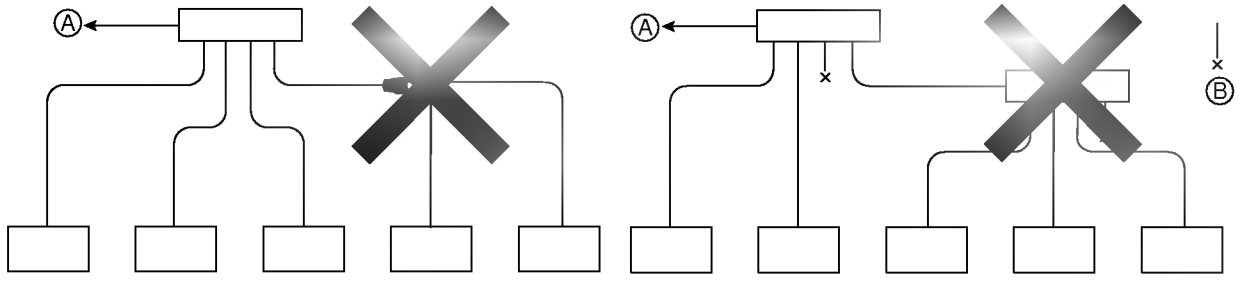

Ⓐ To Outdoor Unit
Ⓑ Capped Piping

9. Always use good-quality materials for brazing.
10. The Multi V Series will stop due to an abnormality like excessive or insufficient refrigerant. At such a time, always properly charge the refrigerant to the system. When servicing, always check the notes concerning pipe length and amount of additional refrigerant at both locations.
11. **Never perform a pump down. This will not only damage the compressor but also deteriorate the performance.**
12. **Never use refrigerant to perform an air purge. Always evacuate using a vacuum pump.**
13. Always insulate the piping properly. Insufficient insulation will result in a decline in heating/cooling performance, water drops from condensation and other such problems.
14. When connecting the refrigerant piping, make sure the service valves of the outdoor unit is completely closed (the factory setting) and do not operate it until the refrigerant piping for the outdoor and indoor units has been connected, a refrigerant leakage test has been performed and the evacuation process has been completed.
15. Always use a non-oxidizing brazing material for brazing the parts. If a non-oxidizing brazing material is not used, it could cause clogging or damage to the compressor unit.
16. **Charge Nitrogen gas for pipe not to be oxidized during brazing.**
17. **Connect a strainer (Filter/Drier) to liquid pipe outside of service port**
    - strainer (Filter/Drier): DANFOSS product.
18. **When recharging refrigerant, the drier in outdoor unit should be replaced.**

⚠ WARNING

When installing and moving the air conditioner to another site, be sure to make refrigerant recharged after perfect evacuation.

- If a different refrigerant or air is mixed with the original refrigerant, the refrigerant cycle may malfunction and the unit may be damaged.

⚠ CAUTION

When connecting the piping from outdoor unit(CRUN1008T0), the pipe withdraw hole of front panel should be cut, the cutout section is so sharp that it may cause an wound on finger.

- The cut section should be eliminated and smooth.

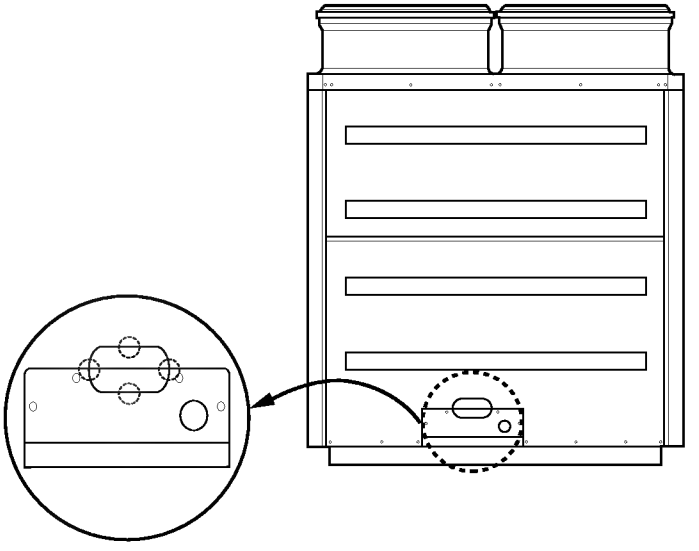

○ : Cut section

◆ Y branch method

CRUN458S0

Example : 5 indoor units connected

Ⓐ : outdoor unit
Ⓑ : 1st branch (branch union)
Ⓒ : indoor units
Ⓓ : downward indoor unit

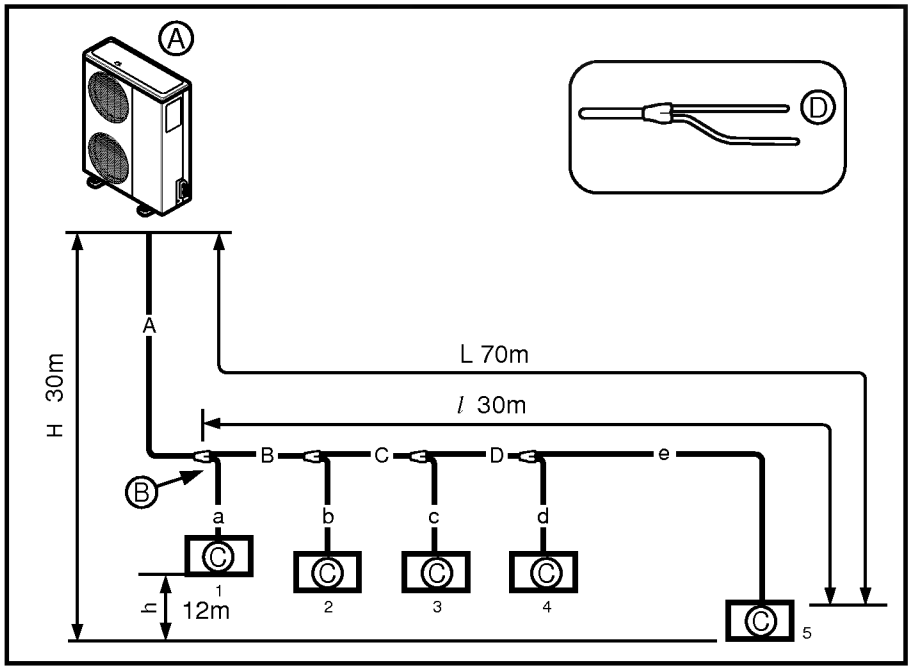

➲ Piping diameter (A)

- Liquid pipe : Ø12.7mm(1/2 inch)
- Gas pipe : Ø19.05mm(3/4 inch)

➲ Refrigerant pipe diameter from branch to branch (B,C,D)

Downward indoor unit total capacity [kW(Btu/h)]	Liquid pipe (mm)	Gas pipe (mm)
~8.2(28,000)	Ø9.52	Ø15.88
~15.0(51,000)	Ø12.7	Ø19.05

➲ Total pipe length = A+B+C+D+a+b+c+d+e ≤ 100m

L	Longest pipe length
	A+B+C+D+e ≤ 70m
l	Longest pipe length after 1st branch
	B+C+D+e ≤ 30m
H	Difference in height(outdoor ↔ indoor)
	H ≤ 30m (20m : outdoor is lower than indoor units)
h	Difference in height (indoor ↔ indoor)
	h ≤ 12m

CRUN1008T0

Example : 5 indoor units connected

Ⓐ : outdoor unit
Ⓑ : 1st branch (branch union)
Ⓒ : indoor units
Ⓓ : downward indoor unit

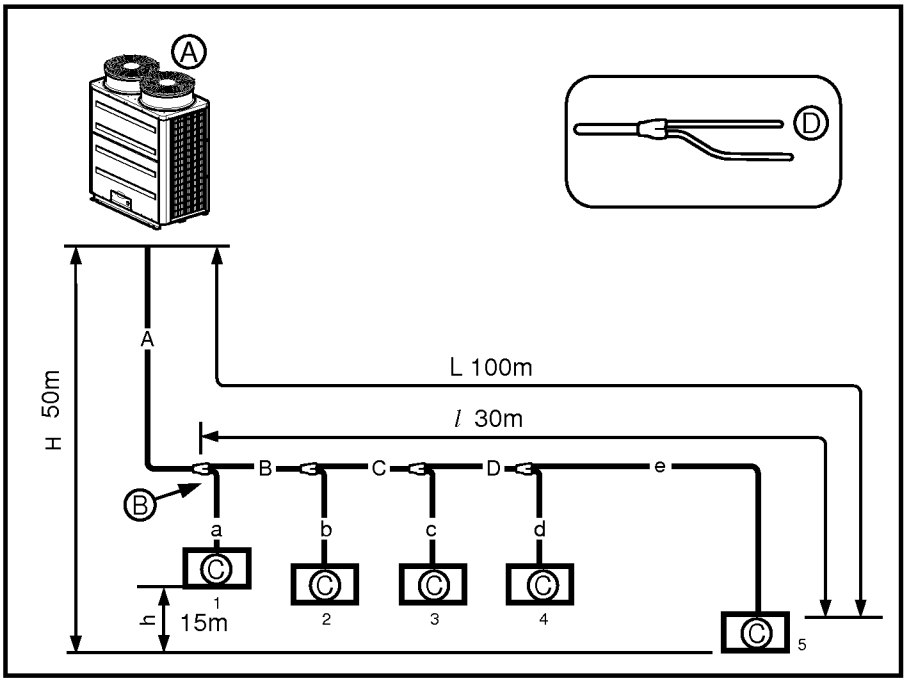

➲ Piping diameter (A)

- Liquid pipe : Ø15.88mm(5/8 inch)
- Gas pipe : Ø28.58mm(9/8 inch)

➲ Refrigerant pipe diameter from branch to branch (B,C,D)

Downward indoor unit total capacity [kW(Btu/h)]	Liquid pipe [mm(inch)]	Gas pipe [mm(inch)]
~8.2(28,000)	Ø9.52(3/8)	Ø15.88(5/8)
~17.6(60,000)	Ø12.7(1/2)	Ø19.05(3/4)
~28.1(96,000)	Ø12.7(1/2)	Ø25.4(1)
~36.3(125,000)	Ø15.88(5/8)	Ø28.58(9/8)

➲ Total pipe length = A+B+C+D+a+b+c+d+e ≤ 220m

L	Longest pipe length
	A+B+C+D+e ≤ 100m
l	Longest pipe length after 1st branch
	B+C+D+e ≤ 30m
H	Difference in height(outdoor ↔ indoor)
	H ≤ 50m (40m : outdoor is lower than indoor units)
h	Difference in height (indoor ↔ indoor)
	h ≤ 15m

◆ Header Method

CRUN458S0

Example : 6 indoor units connected

Ⓐ : outdoor unit
Ⓑ : 1st branch
Ⓒ : indoor units
Ⓓ : sealing

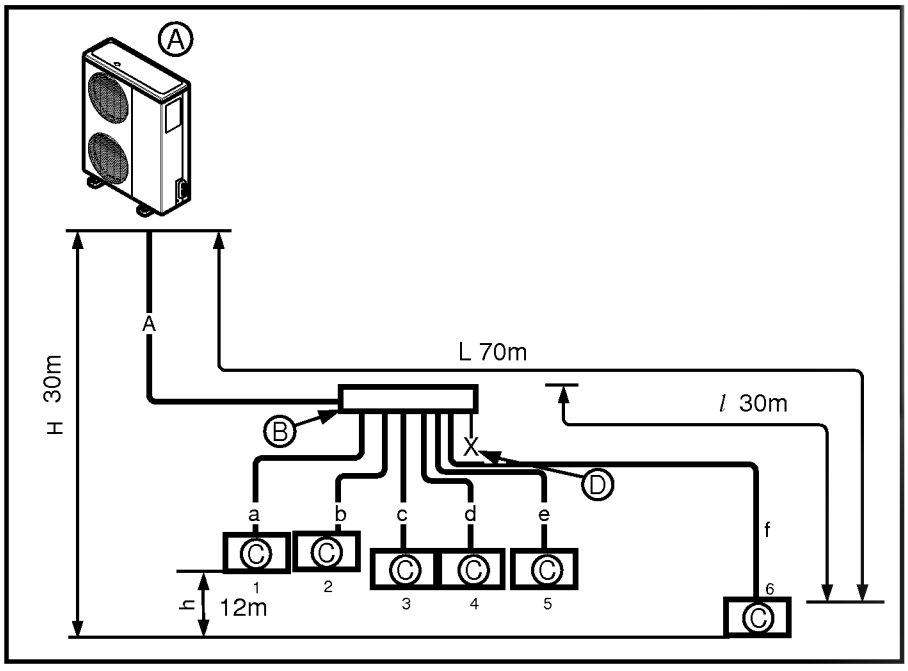

➲ Piping diameter (A)

- Liquid pipe : Ø12.7mm(1/2 inch)
- Gas pipe : Ø19.05mm(3/4 inch)

Branch pipe can not be used after header

➲ Total pipe length = A+a+b+c+d+e+f ≤ 100m

L	Longest pipe length
	A+f ≤ 70m
l	Longest pipe length after 1st branch
	f ≤ 30m
H	Difference in height(outdoor ↔ indoor)
	H ≤ 30m (20m : outdoor is lower than indoor units)*
h	Difference in height (indoor ↔ indoor)
	h ≤ 12m

* Indoor unit should be installed at lower position than the header.

CRUN1008T0

Example : 6 indoor units connected

Ⓐ : outdoor unit
Ⓑ : 1st branch
Ⓒ : indoor units
Ⓓ : sealing

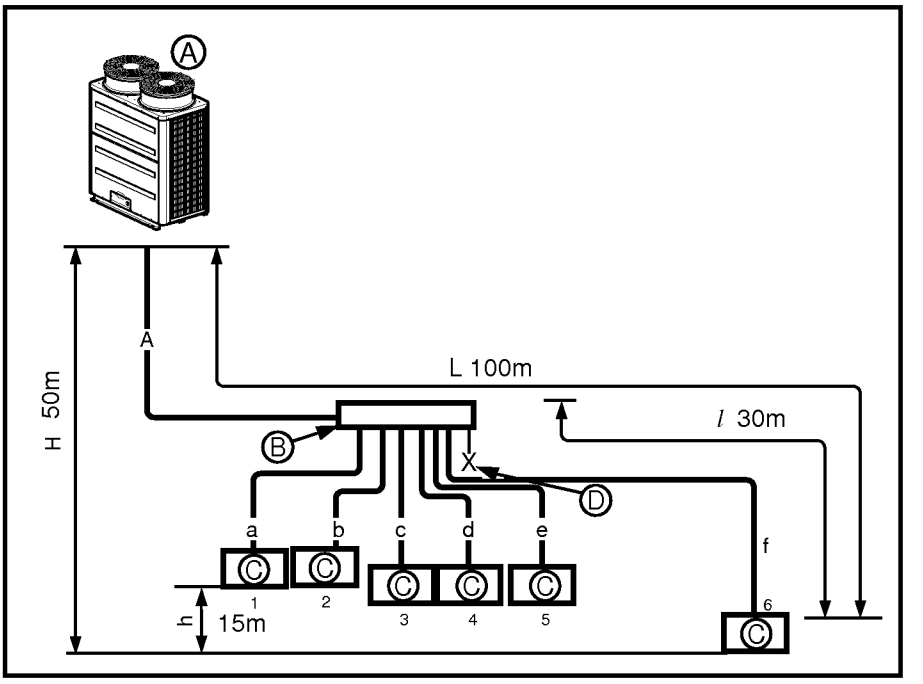

➲ Piping diameter (A)

- Liquid pipe : Ø15.88mm(5/8 inch)
- Gas pipe : Ø28.58mm(9/8 inch)

Branch pipe can not be used after header

➲ Total pipe length = A+a+b+c+d+e+f ≤ 220m

L	Longest pipe length
	A+f ≤ 100m
l	Longest pipe length after 1st branch
	f ≤ 30m
H	Difference in height(outdoor ↔ indoor)
	H ≤ 50m (40m : outdoor is lower than indoor units)*
h	Difference in height (indoor ↔ indoor)
	h ≤ 15m

* Indoor unit should be installed at lower position than the header

◆ Combination of Y branch/header method

CRUN458S0

Example : 5 indoor units connected

Ⓐ : outdoor unit
Ⓑ : 1st branch (branch union)
Ⓒ : Y branch
Ⓓ : indoor unit
Ⓔ : header
Ⓕ : sealing
Ⓖ : downward indoor unit

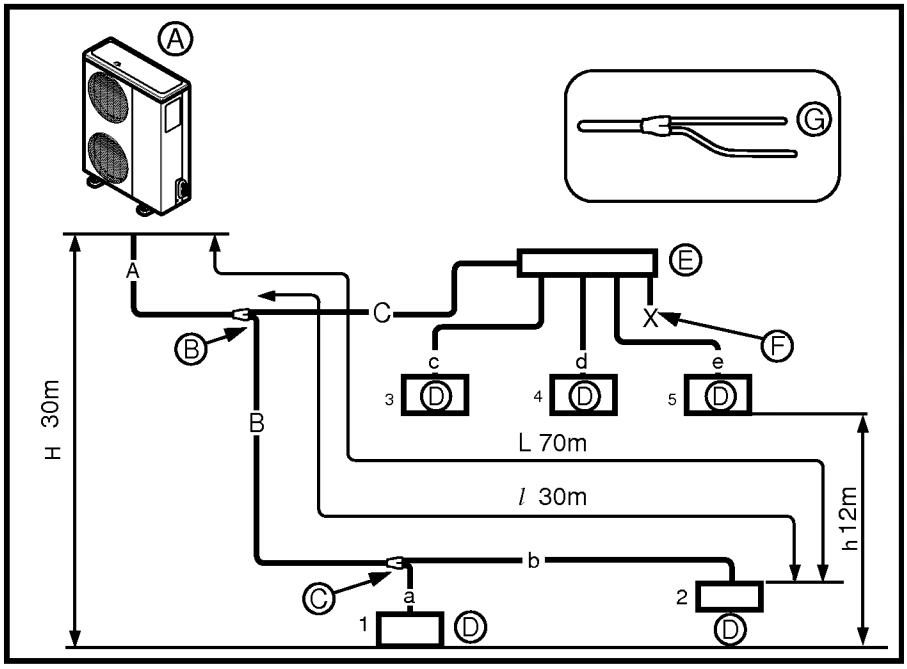

➲ Piping diameter (A)

- Liquid pipe : Ø12.7mm(1/2 inch)
- Gas pipe : Ø19.05mm(3/4 inch)

Branch pipe can not be used after header

➲ Refrigerant pipe diameter from branch to branch (B,C)

Downward indoor unit total capacity [kW(Btu/h)]	Liquid pipe [mm(inch)]	Gas pipe [mm(inch)]
~3.8(13,000)	Ø6.35(1/4)	Ø12.7(1/2)
~8.2(28,000)	Ø9.52(3/8)	Ø15.88(5/8)
~15.0(51,000)	Ø12.7(1/2)	Ø19.05(3/4)

➲ Total pipe length = A+B+C+a+b+c+d+e ≤ 100m

L	Longest pipe length
	A+B+b ≤ 70m
l	Longest pipe length after 1st branch
	B+b ≤ 30m
H	Difference in height(outdoor ↔ indoor)
	H ≤ 30m (20m : outdoor is lower than indoor units)*
h	Difference in height (indoor ↔ indoor)
	h ≤ 12m

* Indoor unit should be installed at lower position than the header

CRUN1008T0

Example : 5 indoor units connected

Ⓐ : outdoor unit
Ⓑ : 1st branch (branch union)
Ⓒ : Y branch
Ⓓ : indoor unit
Ⓔ : header
Ⓕ : sealing
Ⓖ : downward indoor unit

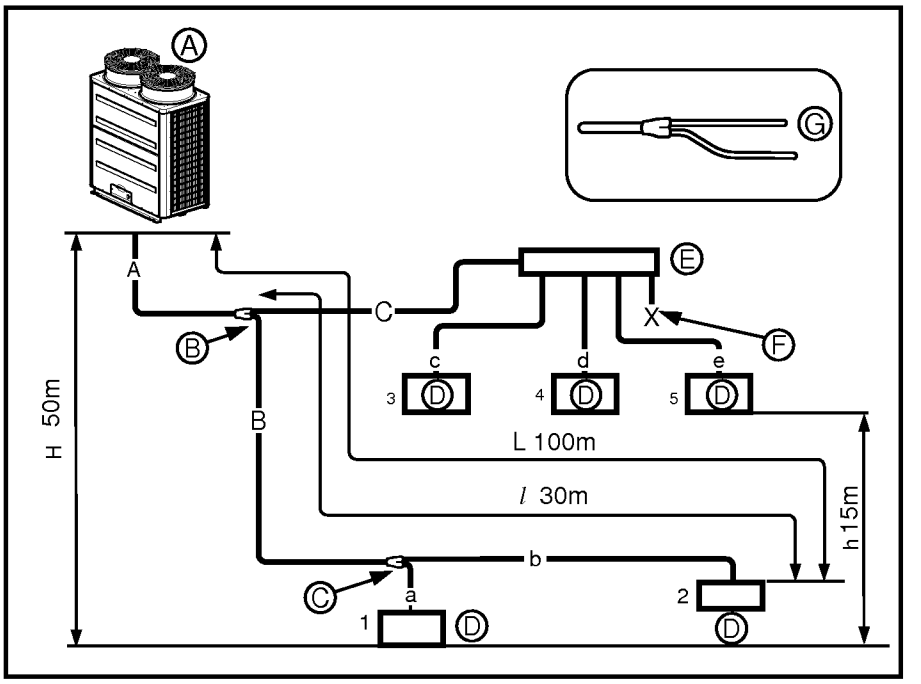

➲ Piping diameter (A)

- Liquid pipe : Ø15.88mm(5/8 inch)
- Gas pipe : Ø28.58mm(9/8 inch)

Branch pipe can not be used after header

➲ Refrigerant pipe diameter from branch to branch (B,C)

Downward indoor unit total capacity [kW(Btu/h)]	Liquid pipe [mm(inch)]	Gas pipe [mm(inch)]
~8.2(28,000)	Ø9.52(3/8)	Ø15.88(5/8)
~17.6(60,000)	Ø12.7(1/2)	Ø19.05(3/4)
~28.1(96,000)	Ø12.7(1/2)	Ø25.4(1)
~36.3(125,000)	Ø15.88(5/8)	Ø28.58(9/8)

➲ Total pipe length = A+B+C+a+b+c+d+e ≤ 220m

L	Longest pipe length
	A+B+b ≤ 100m
l	Longest pipe length after 1st branch
	B+b ≤ 30m
H	Difference in height(outdoor ↔ indoor)
	H ≤ 50m (40m : outdoor is lower than indoor units)*
h	Difference in height (indoor ↔ indoor)
	h ≤ 15m

* Indoor unit should be installed at lower position than the header

◆ Indoor Unit Connection

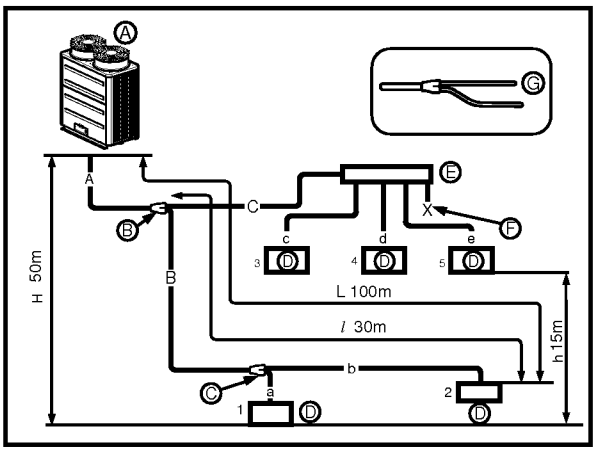

Total pipe length ≤ 220m

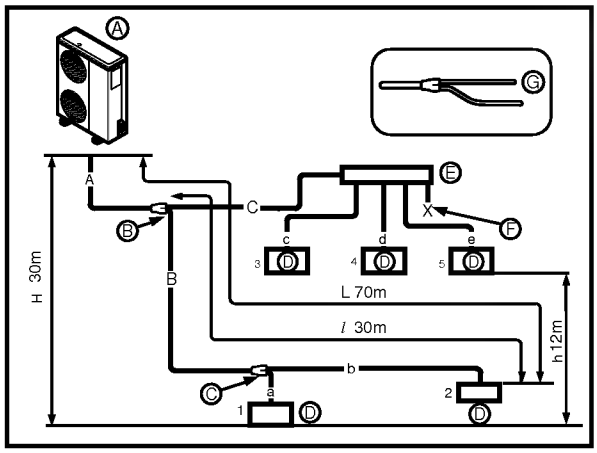

Total pipe length ≤ 100m

➲ Indoor unit connecting pipe from branch (a,b,c,d,e)

Downward indoor unit total capacity [kW(Btu/h)]	Liquid pipe [mm(inch)]	Gas pipe [mm(inch)]
2.1(7,000), 2.6(9,000), 3.5(12,000)	Ø6.35(1/4)	Ø12.7(1/2)
5.3(18,000), 7.0(24,000), 8.2(28,000)	Ø9.52(3/8)	Ø15.88(3/8)
10.5(36,000), 12.3(42,000), 14.0(48,000)	Ø9.52(3/8)	Ø19.05(3/4)

◆ Distribution Method

Line Distribution

With line distribution method, it is possible to make the first or the second main pipe distribution within the third branch, And do not make the main pipe distribution, at or after the fourth branch.

Correct

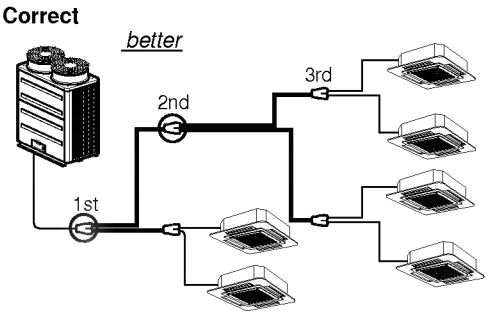

Incorrect

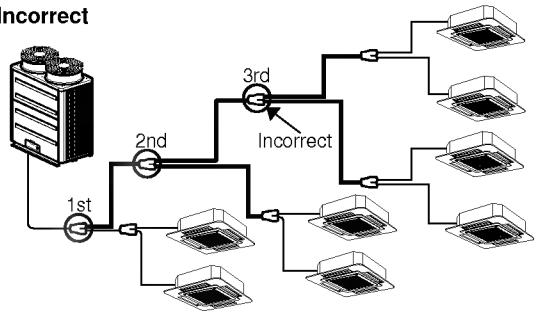

Correct

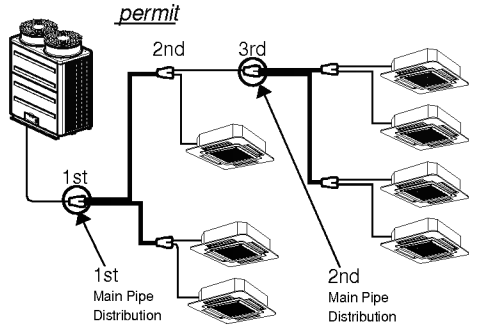

Incorrect

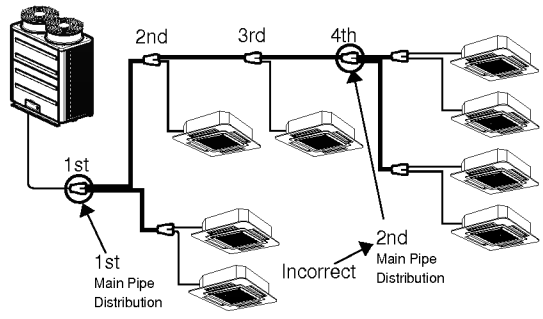

Note-

Main Pipe Distribution : Distribution from One Multi-kit to Two Multi-kits(mark with a circle)

◆ The Amount of Refrigerant

The calculation of the additional charge should take account of the length of pipe.

Ⓐ	CRUN1008T0 charge = 10.0kg CRUN458S0 charge = 3.5kg		
Ⓑ	Additional charge (kg)		
=	Total liquid pipe (m): Ø15.88mm	X	0.2(kg/m)
+	Total liquid pipe (m): Ø12.7mm	X	0.12(kg/m)
+	Total liquid pipe (m): Ø9.52mm	X	0.06(kg/m)
+	Total liquid pipe (m): Ø6.35mm	X	0.025(kg/m)
+	CF(kg) (Correction Factor)		CRUN458S0 : CF = 1.0 CRUN1008T0 : CF = 4.9

Total amount(kg) = Ⓐ + Ⓑ

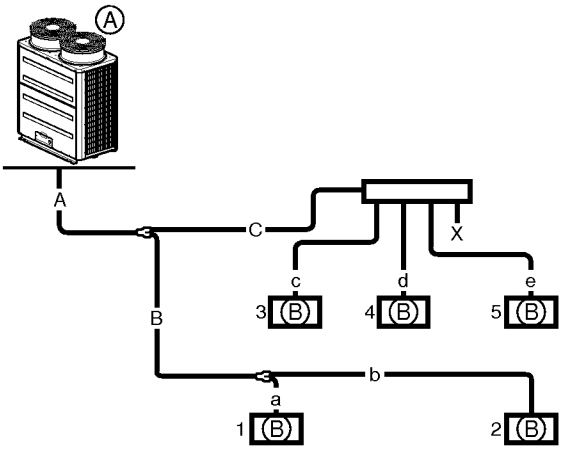

Ⓐ Outdoor Unit(CRUN1008T0)
Ⓑ Indoor Unit
A : ø15.88, 60m
B : ø9.52, 20m
C : ø12.7, 20m
a : ø6.35, 10m
b : ø6.35, 10m
c : ø6.35, 10m
d : ø6.35, 10m
e : ø6.35, 10m

Additional Charge = A x 0.2 + B x 0.06 + C x 0.12
+ (a+b+c+d+e) x 0.025 + CF
= 60 x 0.2 + 20 x 0.06 + 20 x 0.12
+ (10 x 5) x 0.025 + 4.9
= 21.75 (kg)

⚠ WARNING

▶ Regulation for refrigerant leakage(in Europe)
: the amount of refrigerant leakage should satisfy the following equation for human safety.

$$\frac{\text{Total amount of refrigerant in the system}}{\text{Volume of the room at which indoor unit of the least capacity is installed}} \leq 0.3 \ (\text{kg} / \text{m}^3)$$

❒ **If the above equation can not be satisfied, then follow the following steps.**

- Selection of air conditioning system: select one of the next
  1. Effective opening part Installation
  2. Reconfirmation of outdoor unit capacity and piping length
  3. Reduction of the amount of refrigerant
  4. 2 or more security device installation of alarm for gas leakage
- Change indoor unit type
  : installation position should be over 2m from the floor (Wall mounted type → Cassette type)
- Adoption of ventilation system
  : choose ordinary ventilation system or building ventilation system
- Limitation in piping work
  : design for earthquake-proof and prevention against thermal stress

■ Y branch

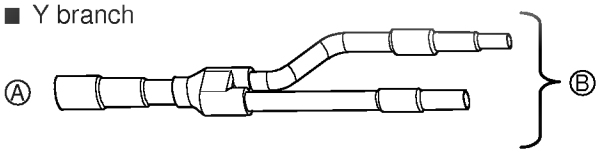

Ⓐ To Outdoor Unit
Ⓑ To Branch Piping or Indoor Unit

• Ensure that the branch pipes are attached horizontally or vertically (see the diagram below.)

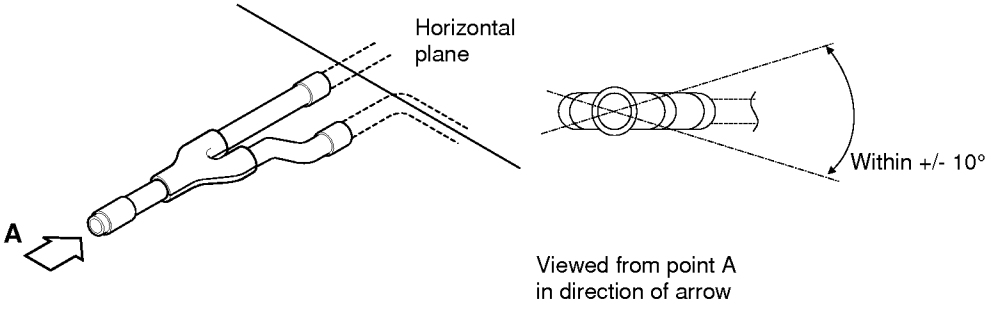

• There is no limitation on the joint mounting configuration.
• If the diameter of the refrigerant piping selected by the procedures described is different from the size of the joint, the connecting section should be cut with a pipe cutter.
• Branch pipe should be insulated with the insulator in each kit.

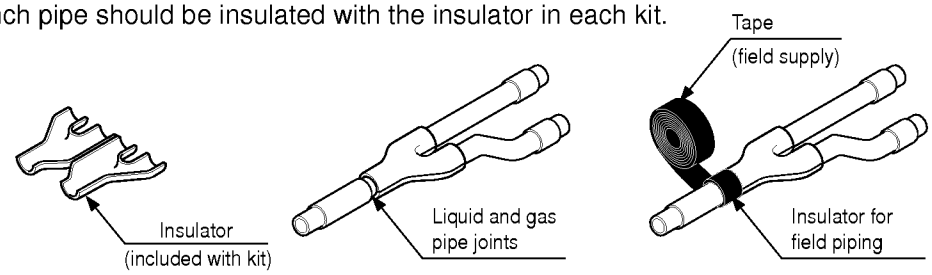

■ Header

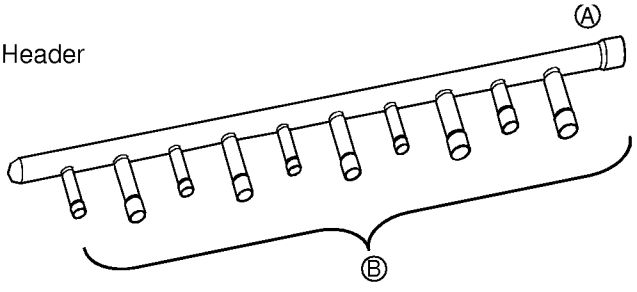

Ⓐ To outdoor unit
Ⓑ To indoor unit

• The indoor unit having larger capacity must be installed closer to Ⓐ than smaller one.
• If the diameter of the refrigerant piping selected by the procedures described is different from the size of the joint, the connecting section should be cut with a pipe cutter.

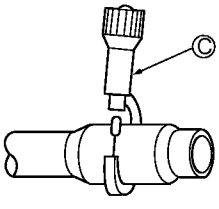

© Pipe cutter

• When the number of pipes to be connected is smaller than the number of header branches, install a cap to the unconnected branches.

- When the number of indoor units to be connected to the branch pipes is less than the number of branch pipes available for connection then cap pipes should be fitted to the surplus branches.

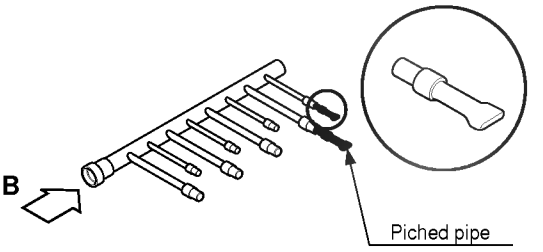

- Fit branch pipe lie in a horizontal plane.

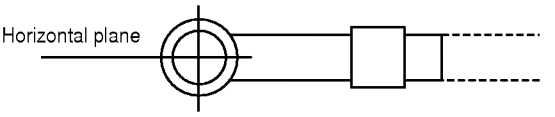

View from point B in the direction of the arrow

- Header should be insulated with the insulator in each kit.

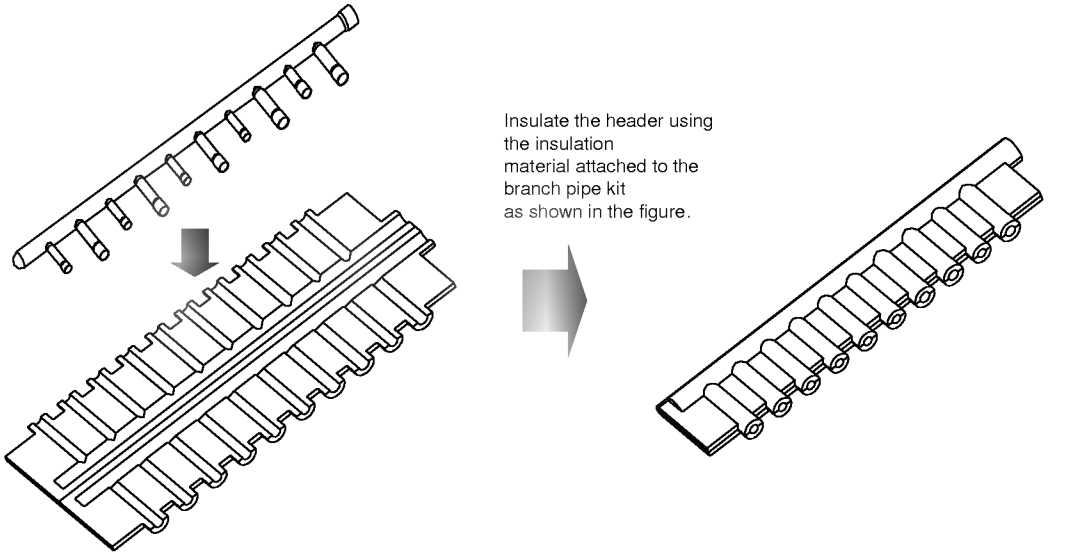

- Joints between branch and pipe should be sealed with the tape included in each kit.

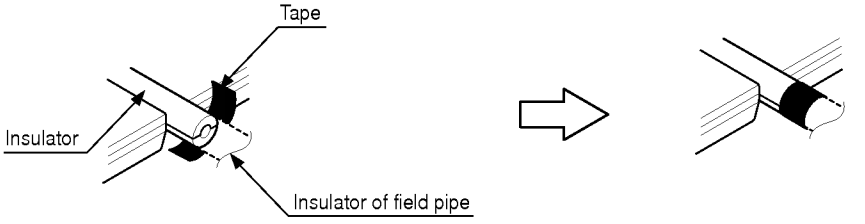

- Any cap pipe should be insulated using the insulator provided with each kit and then taped as described above.

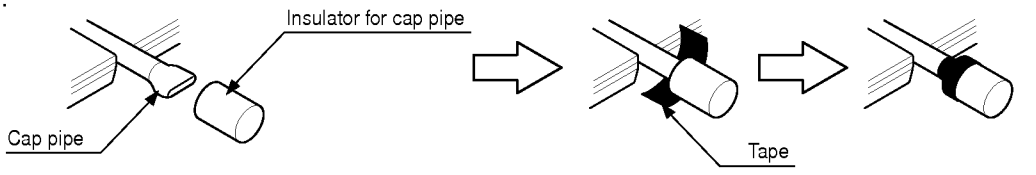

(1) Airtight test

Airtight test should be made by pressurizing nitrogen gas to 2.94 MPa. For the test method, refer to the following figure. (Make a test with the service valves closed. Be also sure to pressurize both liquid pipe and gas pipe.)
The test result can be judged good if the pressure has not been reduced after leaving for about one day after completion of nitrogen gas pressurization.

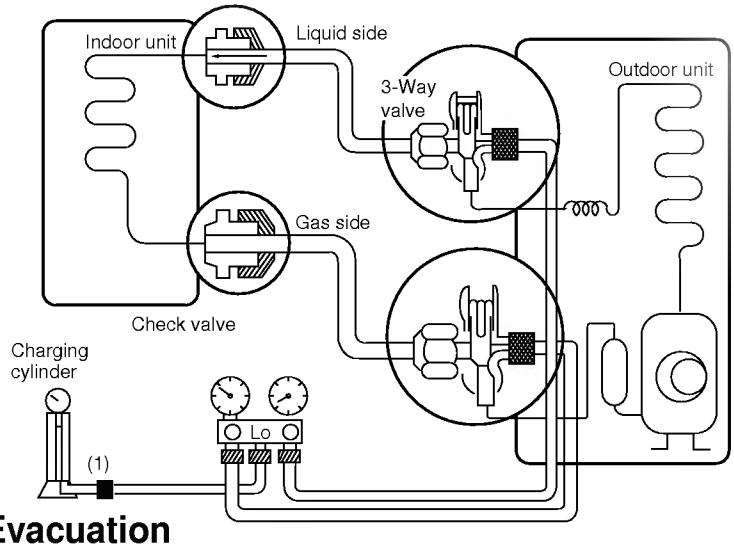

(2) Evacuation

Evacuation should be made from the service port provided on the outdoor unit's service valve to the vacuum pump commonly used for both liquid pipe and gas pipe. (Make evacuation from both liquid pipe and gas pipe with the service valve closed.)
* Never perform air purging using refrigerant.

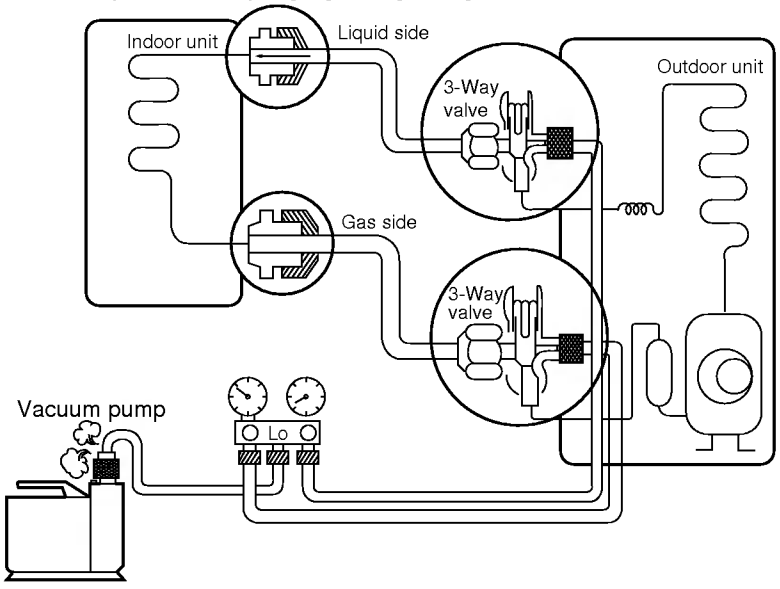

• Evacuation should be done for 3 hours or more after the pressure is under 5 tor.

Scale
Use a gravimeter. (One that can measure down to 0.1 kg.). If you are unable to prepare such a high-precision gravimeter you may use a charge cylinder.

Note : Always add an appropriate amount of refrigerant. (For the refrigerant additional charge)
Too much or too little refrigerant will cause trouble.

⚠ WARNING

When installing and moving the air conditioner to another site, recharge after perfect evacuation.
- If a different refrigerant or air is mixed with the original refrigerant, the refrigerant cycle may malfunction and the unit may be damaged.

Be sure to give insulation work to refrigerant piping by covering liquid pipe and gas pipe separately with enough thickness heat-resistant polyethylene, so that no gap is observed in the joint between indoor unit and insulating material, and insulating materials themselves. When insulation work is insufficient, there is a possibility of condensation drip, etc. Pay special attention to insulation work to ceiling plenum.

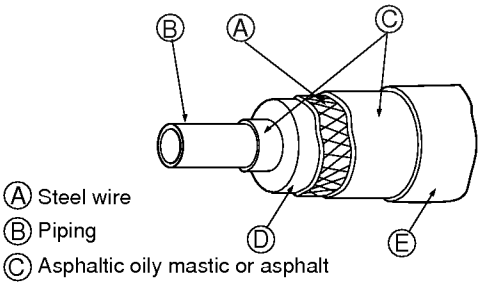

Heat insulation material A	Glass fiber + Steel wire	
	Adhesive + Heat - resistant polyethylene foam + Adhesive tape	
Outer covering B	Indoor	Vinyl tape
	Floor exposed	Water-proof hemp cloth + Bronze asphalt
	Outdoor	Water-proof hemp cloth + Zinc plate + Oily paint

Note:
When using polyethylene cover as covering material, asphalt roofing shall not be required.

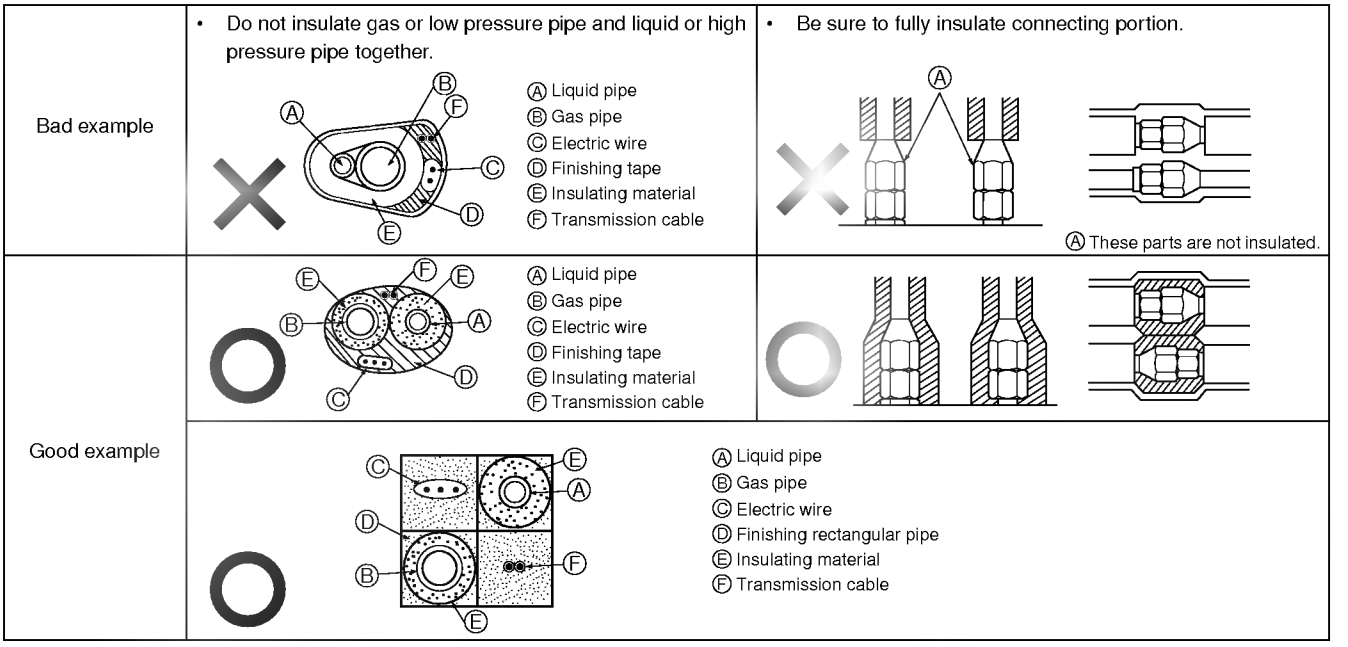

Penetrations

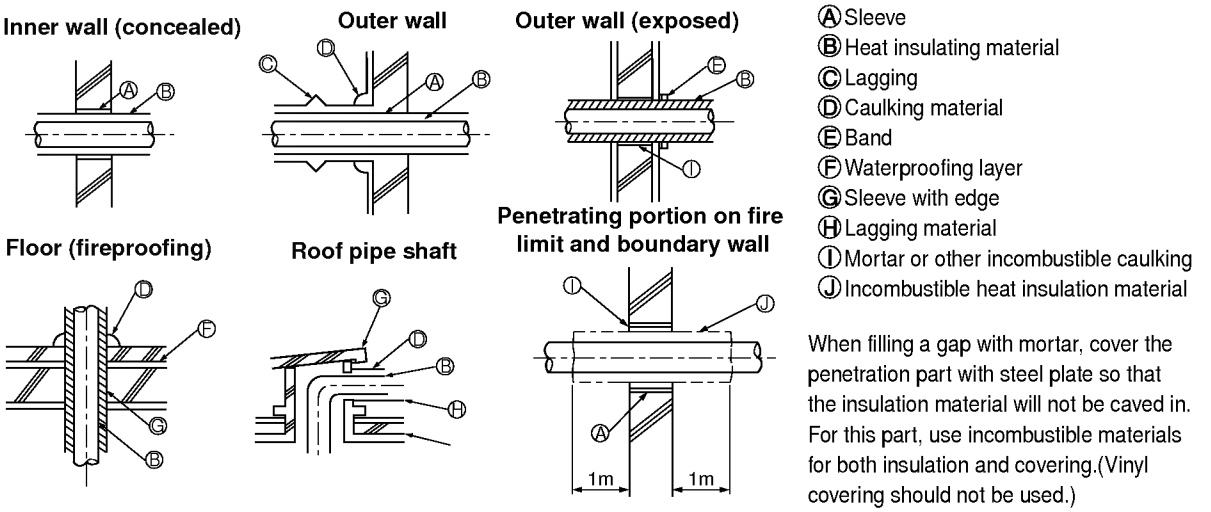

Ⓐ Sleeve
Ⓑ Heat insulating material
Ⓒ Lagging
Ⓓ Caulking material
Ⓔ Band
Ⓕ Waterproofing layer
Ⓖ Sleeve with edge
Ⓗ Lagging material
Ⓘ Mortar or other incombustible caulking
Ⓙ Incombustible heat insulation material

When filling a gap with mortar, cover the penetration part with steel plate so that the insulation material will not be caved in. For this part, use incombustible materials for both insulation and covering.(Vinyl covering should not be used.)

1. Follow ordinance of your governmental organization for technical standard related to electrical equipment, wiring regulations and guidance of each electric power company.

WARNING

Be sure to have authorized electric engineers do electric work using special circuits in accordance with regulations and this installation manual. If power supply circuit has a lack of capacity or electric work deficiency, it may cause an electric shock or fire.

2. Install the outdoor unit transmission line away from the power source wiring so that it is not affected by electric noise from the power source. (Do not run it through the same conduit.)
3. Be sure to provide designated grounding work to outdoor unit.

CAUTION

Be sure to put outdoor unit to earth. Do not connect earth line to any gas pipe, water pipe, lightening rod or telephone earth line. If earth is incomplete, it may cause an electric shock.

4. Give some allowance to wiring for electrical part box of indoor and outdoor units, because the box is sometimes removed at the time of service work.
5. Never connect the main power source to terminal block of transmission line. If connected, electrical parts will be burnt out.
6. Use 2-core shield cable for transmission line.(O mark in the figure below) If transmission lines of different systems are wired with the same multiplecore cable, the resultant poor transmitting and receiving will cause erroneous operations. (X mark in the figure below)
7. Only the transmission line specified should be connected to the terminal block for outdoor unit transmission. (Transmission line to be connected with indoor unit : Terminal block TB6 for transmission line, and central control)

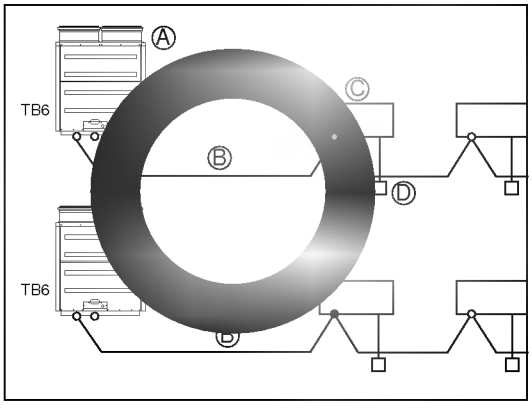

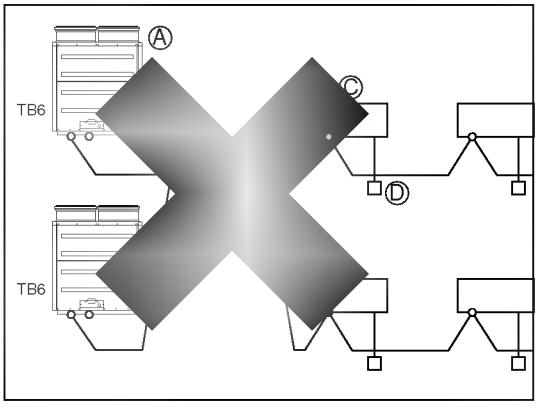

TB6: Transmission line terminal block

Ⓐ Outdoor unit

Ⓑ 2-core cable

Ⓒ Indoor unit

Ⓓ Remote controller

Ⓔ Multi-core cable

- Remove all of the screws at front -upper panel, and remove the front panel by pulling it forward

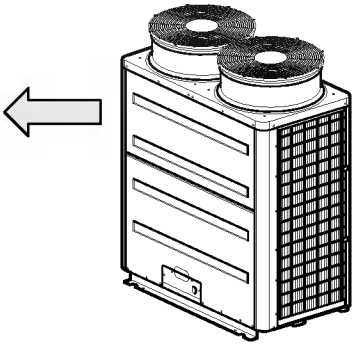

- Connect indoor and outdoor units through the terminal block for transmission lines. Outdoor units and connections to central control systems go through the sub PCB for central control.
- When making an indoor/outdoor connection with shielded wiring, connect the shield ground to the earth screw. When making a central control system connection with shielded wiring, use the terminal block for central control.
- For the distance from main power lines to transmission lines refer to pages 35~37.
- Refer to pages 38~40 for automatic addressing and 45~49 for test run.

WARNING

The temperature sensor for outdoor air should not be exposed to direct sunlight.

-Take a appropriate cover to intercept direct sunlight.

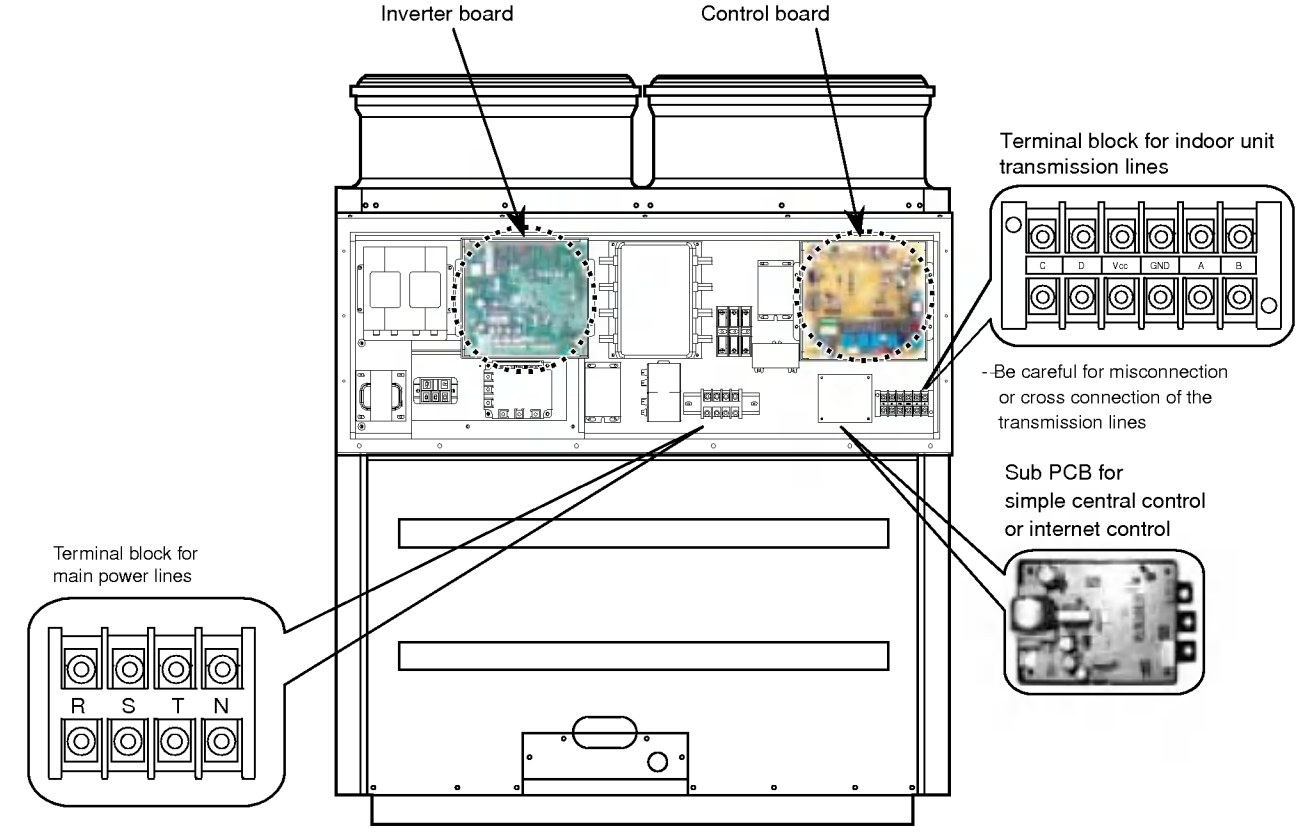

- Be careful for the polarity of main power lines
  R(CB) ➔ R(TB), S(CB) ➔ S(TB)
  T(CB) ➔ T(TB), N(CB) ➔ N(TB)
  (TB: terminal block, CB: circuit breaker)

1) Transmission cable

- Types : shielding wire CVVS or CPEVS
- Diameter : over 0.75mm²
- Insulation material : PVC
- Maximum allowable temperature: 60℃
- Maximum allowable line length: under 300m

2) Remote control cable

- Types : 3-core cable
- Diameter : 0.5mm²
- Maximum length: 100m(over 50m, use over 0.5mm²)

3) Simple central control cable

- Types : 4-core cable
- Diameter : over 0.75mm²
- Insulation material : PVC
- Maximum allowable line length: under 100m

4) Separation of transmission and power lines

- If transmission and power lines are run alongside each other then here is a strong likelihood of operational faults developing due to interference in the signal wiring caused by electrostatic and electromagnetic coupling.
  The table below indicates our recommendation as to appropriate spacing of transmission and power lines where these are to be run side by side.

Current capacity of power line		Spacing
100V or more	10A	300mm
	50A	500mm
	100A	1000mm
	100A or more	1500mm

Note:

1. The figures are based on assumed length of parallel cabling up to 100m. For length in excess of 100m the figures will have to be recalculated in direct proportion to the additional length of line involved.
2. If the power supply waveform continues to exhibit some distortion, the recommended spacing in the table should be increased.

- If the lines are laid inside conduits then the following point must also be taken into account when grouping various lines together for introduction into the conduits.

- power lines(including power supply to air conditioner) and signal lines must not be laid inside the same
- In the same way, when grouping the lines power and signal lines should not be bunched together.

CAUTION

- Have the indoor and outdoor units both been earthed?

■ If apparatus is not properly earthed then there is always a risk of electric shocks, the earthing of the apparatus must be carried out by a qualified person.

◆ Wiring of Main Power Supply and Equipment Capacity

Schematic Drawing of Wiring (Example)

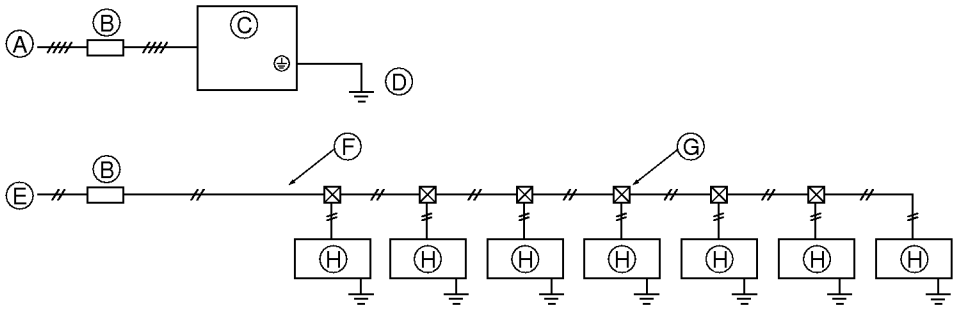

ⒶPower Supply (3-Phase, 4-Wire) 380/400/415 Volt
ⒷSwitch
ⒸOutdoor Unit
ⒹGround
ⒺPower Supply (Single-Phase) 220/230/240 Volt
Ⓕ1.5 mm² or more
ⒼPull Box
ⒽIndoor Unit

Model	Minimum Wire Thickness (mm²)			Switch (A)		Breaker for Wiring (NFB)	Breaker for Current Leakage
	Main Cable	Branch	Ground	Capacity	Fuse		
CRUN0458S0	4.0	–	4.0	30	30	30 A	30 A 100mA 0.1 sec. or less
CRUN01008T0	6.0	–	6.0	50	50	50 A	50 A 100mA 0.1 sec. or less

Model		Wire Thickness (mm²)			Switch (A)		Breaker for Wiring (NFB)	Breaker for Current Leakage
		Main Cable	Branch	Ground	Capacity	Fuse		
Indoor Unit	All Models	2.5	2.5	2.5	25	25	25 A	20 A 30mA 0.1 sec. or less

1. Use a separate power supply for the outdoor unit and indoor unit.
2. Bear in mind ambient conditions (ambient temperature,direct sunlight, rain water,etc.) when proceeding with the wiring and connections.
3. The wire size is the minimum value for metal conduit wiring. The power cable size should be 1 rank thicker taking into account of line voltage drops.
   Make sure the power-supply voltage does not drop more than 10%.
4. Specific wiring requirements should adhere to the wiring regulations of the region.
5. Power supply cable of parts of appliances for outdoor use shall not be lighter than polychloroprene sheathed flexible cable (design 245IEC57). For example, use wiring such as YZW.

⚠ WARNING

- **Be sure to use specified wires for connections so that no external force is imparted to terminal connections. If connections are not fixed firmly, it may cause heating or fire.**
- **Be sure to use the appropriate type of overcurrent protection switch. Note that generated overcurrent may include some amount of direct current.**

⚠ CAUTION

- **Some installation site may require attachment of an earth leakage breaker. If no earth leakage breaker is installed, it may cause an electric shock.**
- **Do not use anything other than breaker and fuse with correct capacity. Using fuse and wire or copper wire with too large capacity may cause a malfunction of unit or fire.**

◆ Example Connection of Transmission Cable

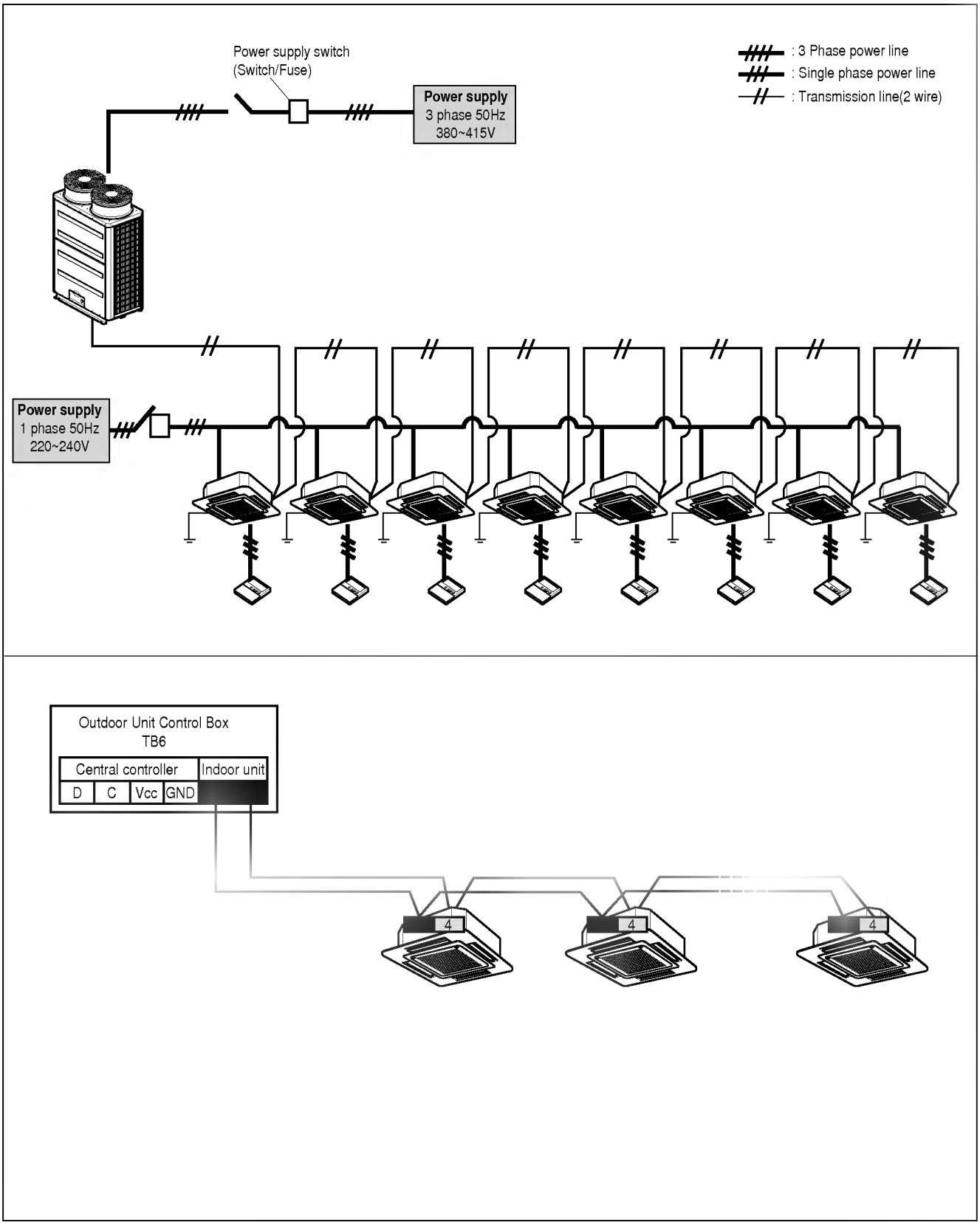

• **The address of indoor units would be set by Automatic addressing**

- CRUN1008T0

① Press the switch(SW02M) of outdoor unit for 5 seconds

② 7-segment of Main PCB in outdoor unit : displays "88"

③ 2~3 minutes passed after ②, the address of each indoor unit is displayed at each wired remote controller or display device of each indoor unit.

- CRUN458S0

① Press the switch(SW01M) of outdoor unit for 5 seconds

② LED01C is ON.

③ 2~3 minutes passed after ②, the address of each indoor unit is displayed at each wired remote controller or display device of each indoor unit.

⚠ CAUTION

• **In the Art Cool type (CRNN-SV) indoor unit, the address is not displayed after automatic addressing.**

⚠ CAUTION

• **If the PCB in indoor unit is replaced with new PCB for service, then the Automatic addressing should be executed.**

CRUN1008T0 Control board

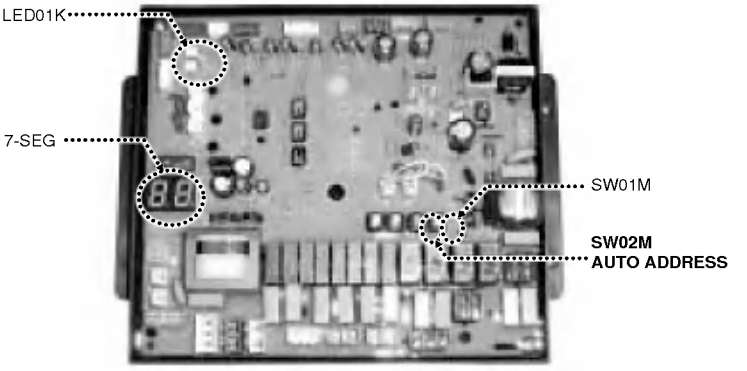

CRUN458S0 Control board

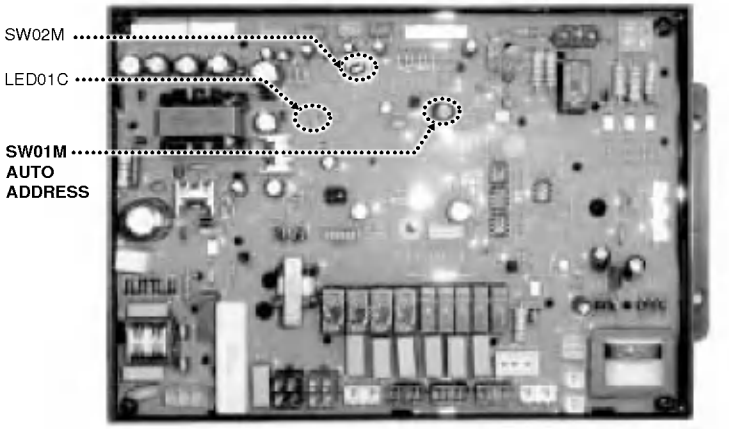

◆ The Procedure of Automatic Addressing

CRUN458S0

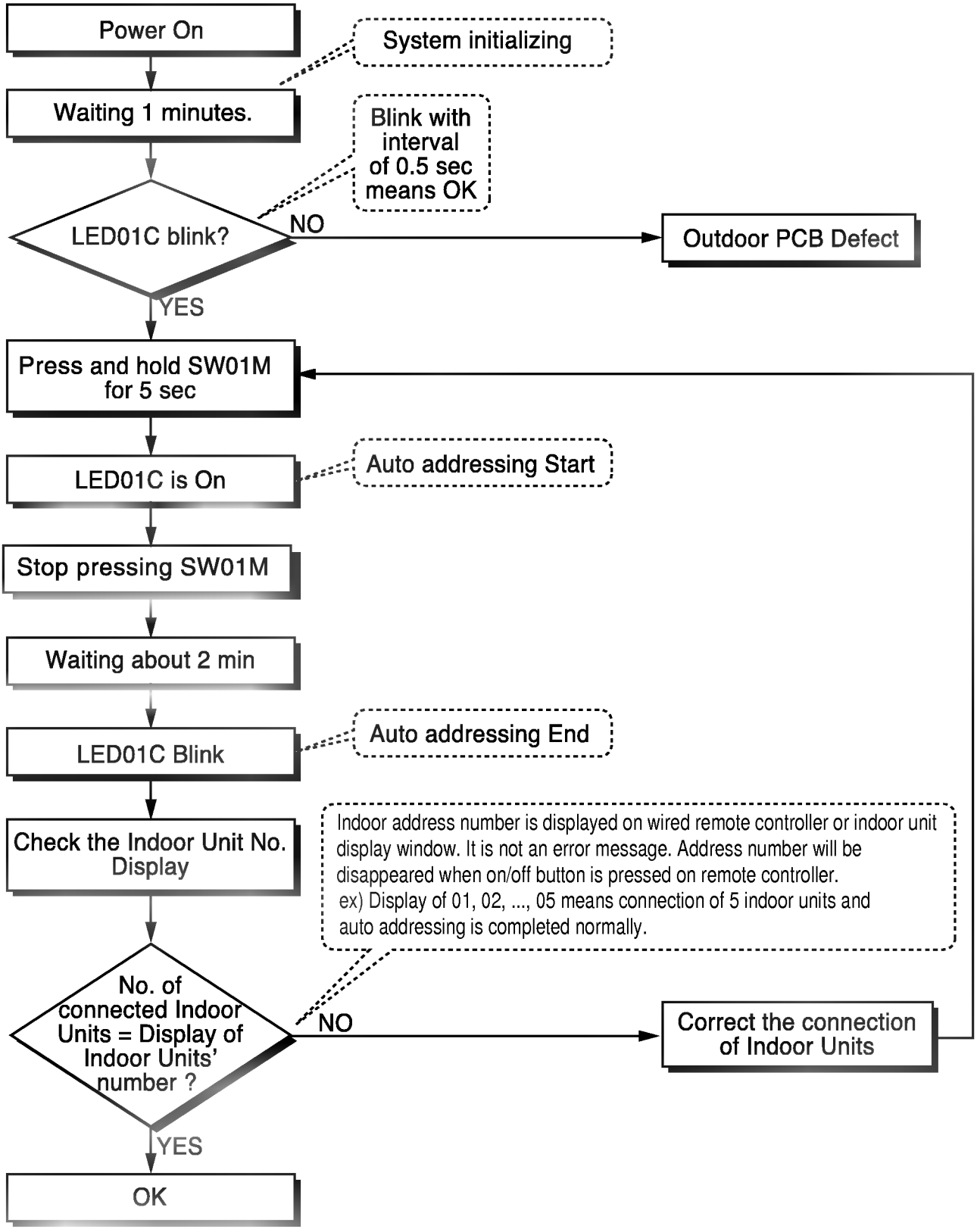

CRUN1008T0

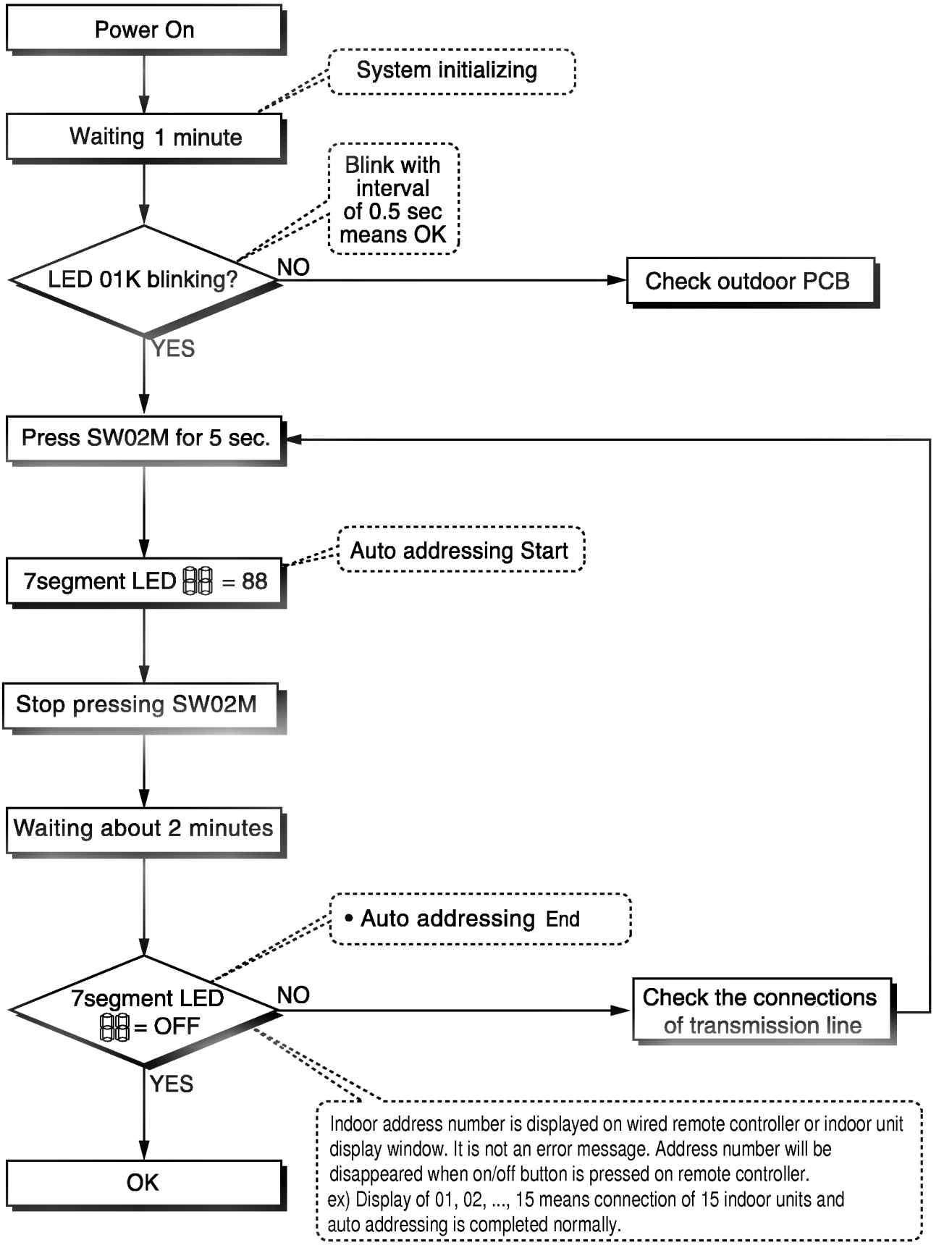
Power On
System initializing
Waiting 1 minute
Blink with interval of 0.5 sec means OK
LED 01K blinking?
NO
Check outdoor PCB
YES
Press SW02M for 5 sec.
Auto addressing Start
7segment LED = 88
Stop pressing SW02M
Waiting about 2 minutes
• Auto addressing End
7segment LED = OFF
NO
Check the connections of transmission line
YES
OK
Indoor address number is displayed on wired remote controller or indoor unit display window. It is not an error message. Address number will be disappeared when on/off button is pressed on remote controller.
ex) Display of 01, 02, ..., 15 means connection of 15 indoor units and auto addressing is completed normally.

① Confirm the power of whole system(indoor unit, outdoor unit) is OFF, otherwise turn off.

② The transmission lines connected to C, D of simple central controller should be connected to C,D terminal port for central control of outdoor unit with care for their polarity.(C ➔ C, D ➔ D)

③ DC power line(12V) and ground line should be connected to terminal block of adjacent indoor unit.

④ Set group number with increasing the rotary switch from 00 to 7F in orderly manner. (if it is desired to control several indoor units as a group, each group control is possible by group ID rotary switch setting from 0 to 7)

⑤ The whole system power turns on.

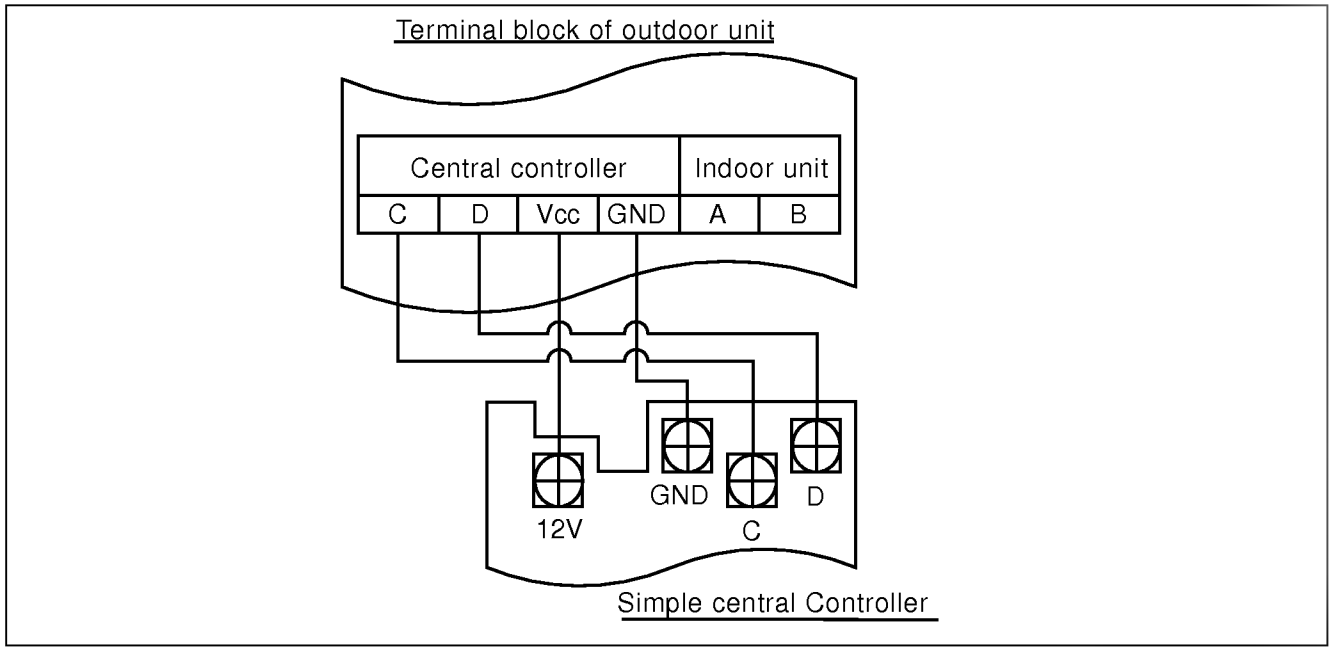

• Group number of each indoor unit is set with rotary switch of control PCB in each indoor unit.

• Before power is supplied, the rotary switch for simple central controller on the indoor unit PCB should be set.

• ID Mapping of Rotary Switch is following table.

Each rotary switch setting in Indoor		Simple central controller recognition
SW01M(GROUP)	SW02M(UNIT)	
0	0~F	1st Group, 0~F Unit
1	0~F	2nd Group, 0~F Unit
2	0~F	3rd Group, 0~F Unit
3	0~F	4th Group, 0~F Unit
4	0~F	5th Group, 0~F Unit
5	0~F	6th Group, 0~F Unit
6	0~F	7th Group, 0~F Unit
7	0~F	8th Group, 0~F Unit

◆ Wiring Diagram for Simple Central Controller

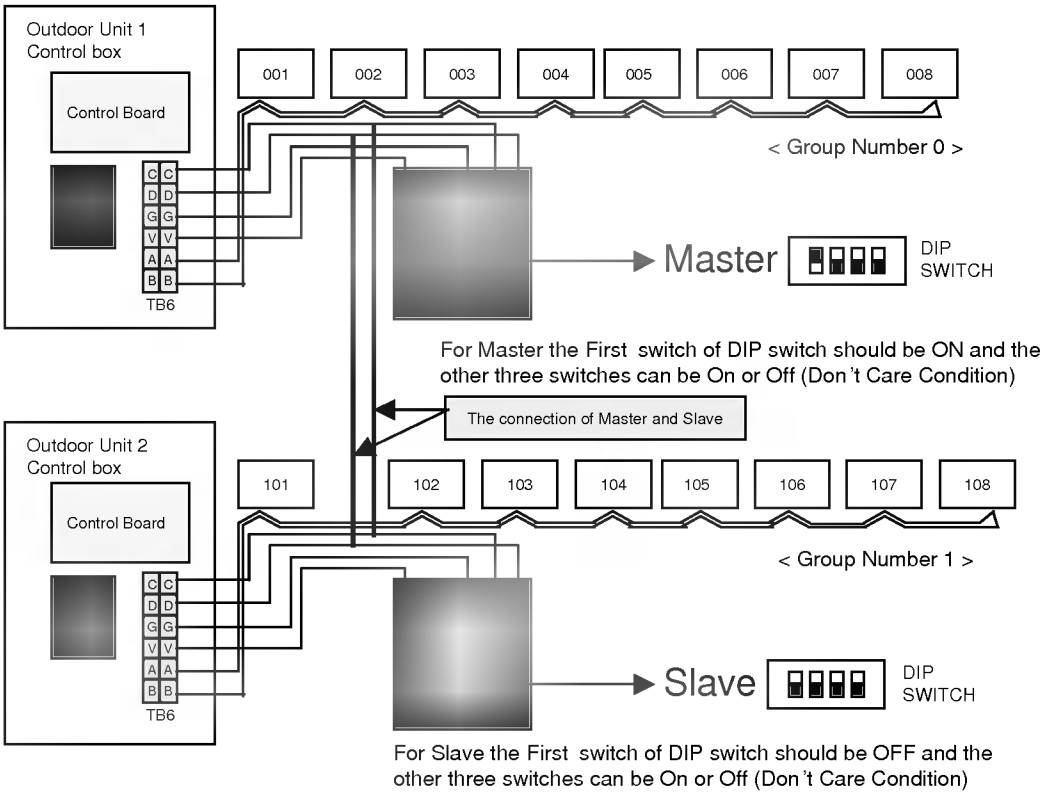

❑ PC Borad of Simple Cental Controller

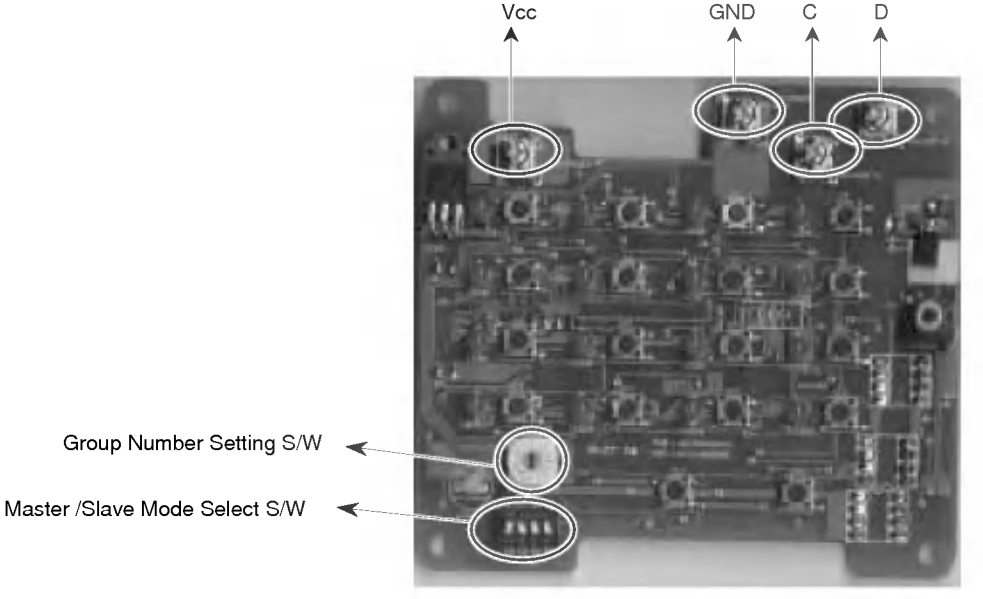

◆ Position of rotary switch on the indoor unit

Cassette, Duct, Convertible type indoor unit

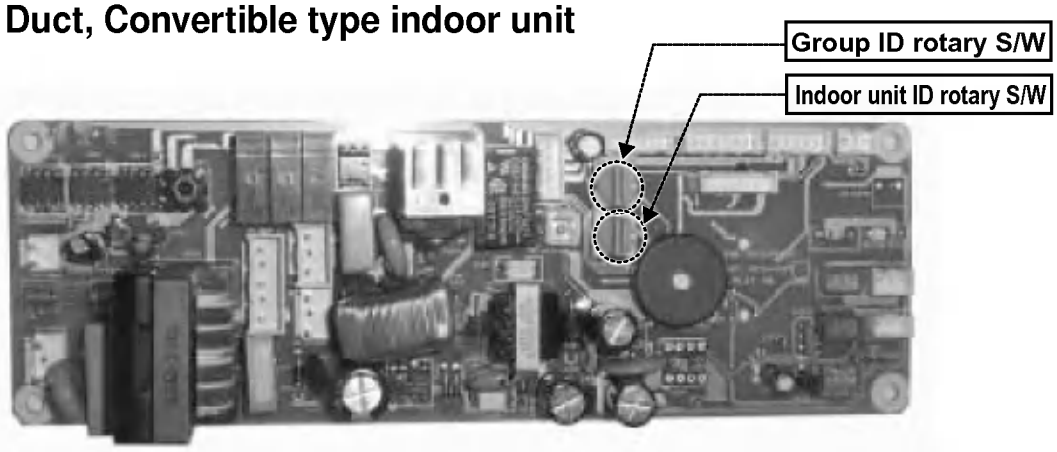

Wall mounted type indoor unit

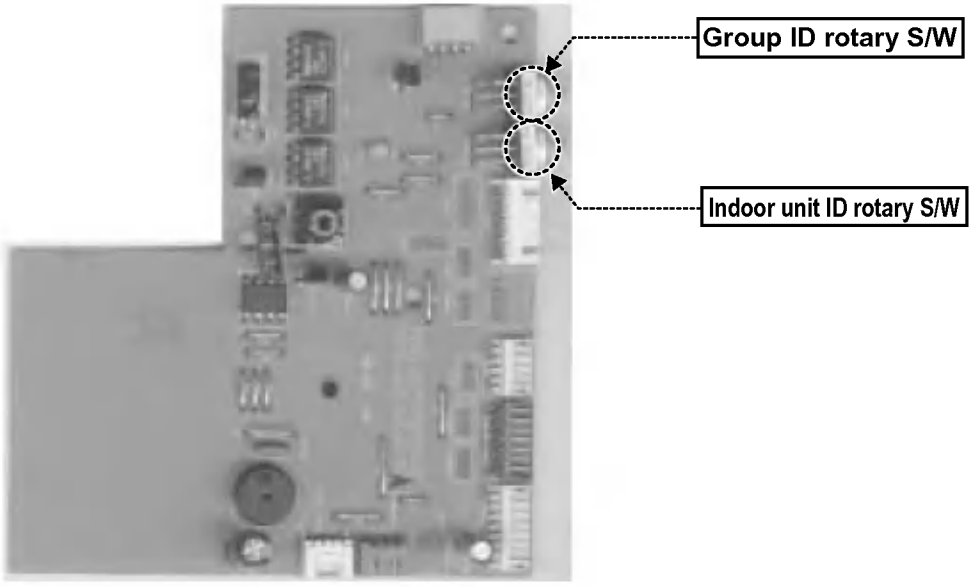

Artcool type indoor unit

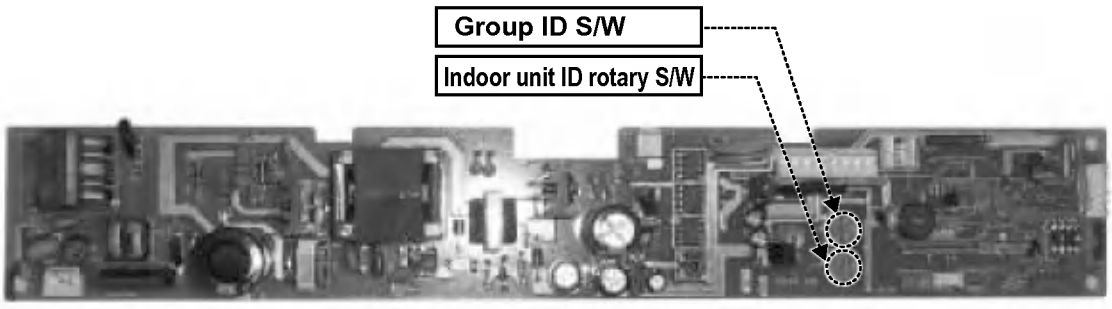

It operates maximum 16 Units by only one Wired Remote Controller, and each unit starts sequentially to prevent overcurrent.

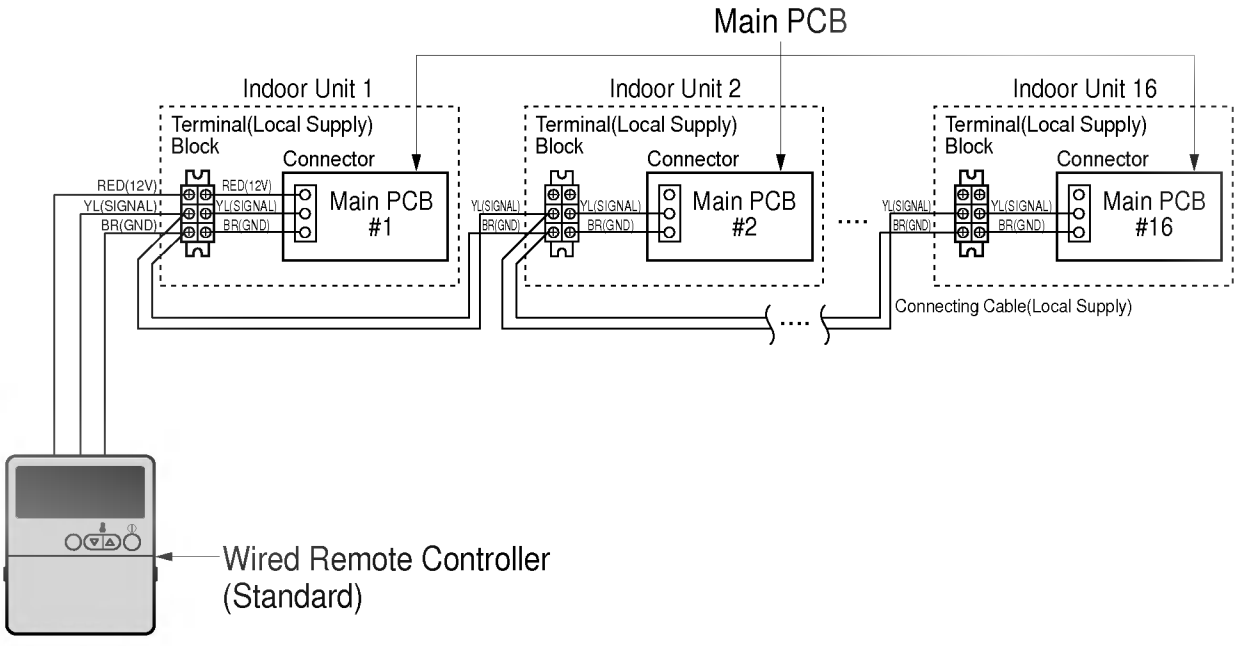

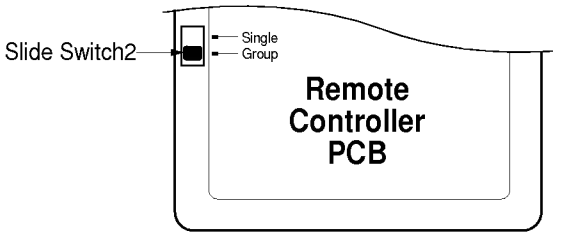

- Using the supplied Wired Remote Controller, wire them like above.
- Move slide switch 2 to "Group" position.
- Ensure that the color of wire.

CAUTION

- **Be careful not to exchange the color of wires.**
- **The maximum length of connecting wire should be below 200m(25Ω) on connecting each units.**
- **Use a wire more than 0.5mm²**

Content of parentheses ( ) is for CRUN458S0

1	Check to see whether there is any refrigerant leakage, and slack of power or transmission cable.
2	Confirm that 500 V megger shows 2.0 (1.0) MΩ or more between power supply terminal block and ground. Do not operate in the case of 2.0 (1.0) MΩ or less. NOTE: Never carry out megaohm check over terminal control board. Otherwise the control board would be broken. Immediately after mounting the unit or after leaving it turned off for an extended length of time, the resistance of the insulation between the power supply terminal board and the ground may decrease to approx. 2 (1) MΩ as a result of refrigerant accumulating in the internal compressor. If the insulation resistance is less than 2 (1) MΩ, turning on the main power supply and energizing the crankcase heater for more than 12 hours will cause the refrigerant to evaporate, increasing the insulation resistance.
3	Check if both gas and liquid valves are fully opened. NOTE: Be sure to tighten caps.
4	Turn on universal power supply at least 12 hours before the test run to ensure the crank case heater should heat up the compressor. If the turn-on hours of the heater are too short, it may result in a malfunction of compressor.
5	Check if there are any problems in automatic addressing or not: Check and confirm that there are no error messages in the display of indoor units or remote controllers and LED in outdoor units.

The phenomena from main component failure

Component	Phenomenon	Cause	Check method and Trouble shooting
Compressor	Not operating	Motor insulation broken	Check resistance between terminals and chassis
		Strainer locking	Service necessary
		Oil shortage	Open drain cock and check oil
	Stop during running	Motor insulation failure	Check resistance between terminals and chassis
	Loud noise during running	Phase sequence fault	Check wiring(R, S, T) sequence, or Inter change last two phase connection.
Outdoor fan	High pressure error at cooling	Motor failure, Bad ventilation around outdoor heat exchanger	Check the outdoor fan operation after turning the outdoor unit off for some time. Remove obstacles around the outdoor unit.
Outdoor LEV	Heating failure, frequent defrosting	Bad connector contact	Check connector
	No operating sound at applying power	Coil failure	Check resistance between terminals
	Heating failure, Frozen outdoor heat exchanger part	LEV clogged	Service necessary
	Low pressure error or discharge temperature error	LEV clogged	Service necessary

When system fault occurs, the error code is displayed at indoor unit display or remote controller display, the trouble shooting guide is in the service manual.

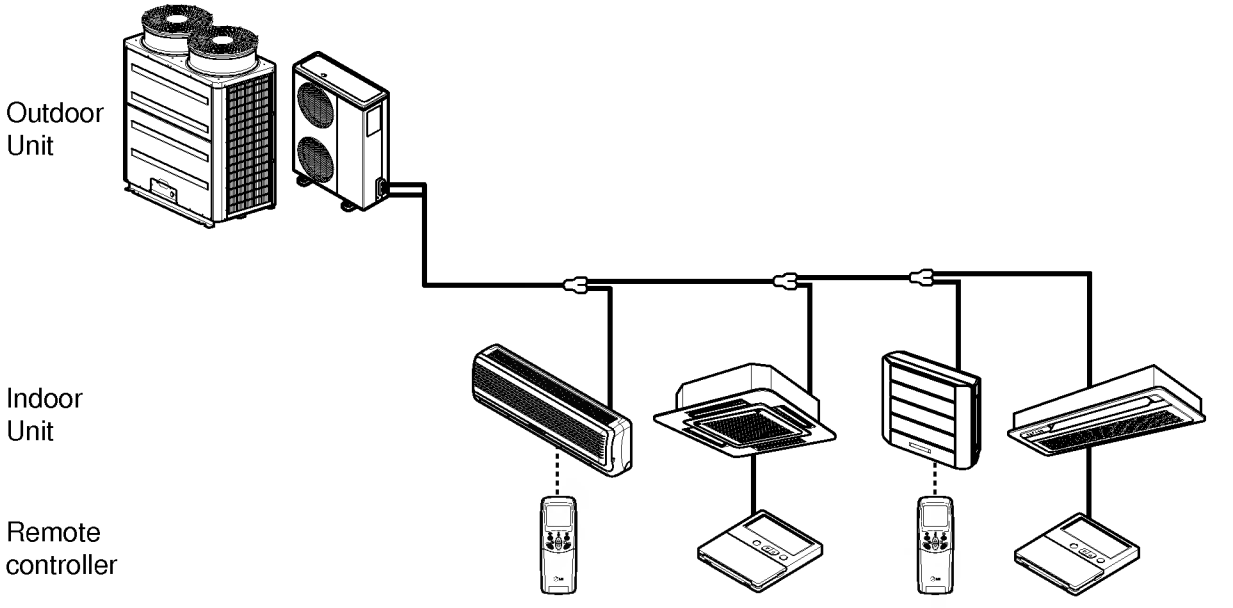

Error Indicator

- The function is to self-diagnose airconditioner and indicate the problems, if any.
- Error mark is displayed on display window of indoor units and wired remote controller, and 7-segment LED of outdoor unit control board as shown in the table.
- If more than two troubles occur simultaneously, lower number of error code is first displayed.
- After error occurrence, if error is released, error LED is also released simultaneously.

	Display		Title	Cause of Error
Indoor unit related error	0	1	Indoor unit air sensor	Indoor unit air sensor open or short
	0	2	Indoor unit sensor(inlet pipe)	Indoor unit inlet pipe sensor open or short
	0	3	Wired remote controller ↔ indoor unit transmission	In the case that indoor unit can not receive any signal from wired remote controller successively for 3 minutes
	0	4	Drain pump	Malfunction of drain pump
	0	5	Outdoor unit ↔ indoor unit transmission	In the case that indoor unit can not receive any signal from outdoor unit successively for 3 minutes
	0	6	Indoor unit outlet pipe sensor	Indoor unit outlet pipe sensor open or short
	0	7	The other operation mode	In the case that an indoor unit is operated the other operation mode different from the operated indoor unit
	0	8	Not in use	Not in use
	0	9	Serial No. Error	In the case that the serial number marked on EEPROM of indoor unit is 0 or FFFFFF
Power related error	2	1	DC peak	IPM over temperature or compressor malfunction is occurred 3 times in 1 hour
	2	2	Max CT	When current detection is over the maximum current limit
	2	3	DC link	DC charging is not performed for 45 sec after starting relay turn on
	2	4	High pressure	Compressor is OFF 3 times in 1 hour due to high pressure
	2	5	Low/Over voltage	Input voltage is out of tolerance of rating voltage
Compressor related error	3	1	Not in use	Not in use
	3	2	Discharge temperature (inverter compressor)	Due to over rising of inverter compressor discharge temperature, Compressor off is occurred 3 times in 1 hour
	3	3	Discharge temperature (constant speed compressor)	Due to over rising of constant speed compressor discharge temperature, Compressor off is occurred 3 times in 1 hour
	3	4	High pressure	Due to high pressure, Compressor off is occurred 3 times in 1 hour
	3	5	Low pressure	Due to low pressure, Compressor off is occurred 3 times in 1 hour

■ Error code 52, 53, 54, 56, 57 are applied only to CRUN1008T0

	Display		Title	Cause of Error
Outdoor unit related error	4	0	CT sensor	CT sensor open or short
	4	1	Inverter compressor discharge pipe sensor (discharge temperature)	Inverter compressor dischare pipe sensor open or short
	4	2	Low pressure sensor	Low pressure sensor open or short
	4	3	High pressure sensor	High pressure sensor open or short
	4	4	Outdoor air sensor	Outdoor unit air sensor open or short
	4	5	Outdoor unit pipe sensor	Outdoor unit pipe sensor(left) open or short
	4	6	Suction pipe sensor	Suction pipe sensor open or short
	4	7	Normal compressor discharge pipe	Normal compressor discharge pipe sensor open or short
	4	8	Outdoor unit pipe sensor	Outdoor unit pipe sensor (right) open or short
	4	9	Voltage sensor	Voltage sensor open or short
Transmission related error	5	1	Indoor connection over(capacity)	The displayed number of indoor units being connected is over rated capacity of outdoor unit
	5	2	Transmission error from inverter PCB to main PCB in the outdoor unit	In the case that main PCB can not receive any signal from inverter PCB successively for 20 seconds
	5	3	Transmission error from indoor unit to main PCB in the outdoor unit	In the case that main PCB can not receive any signal-from indoor unit successively for 3minutes
	5	4	Reverse connection of the R,S,T power line	Misconnection or disconnection of R,S,T power line
	5	5	Transmission error from central control to main PCB in the outdoor unit	In the case that main PCB can not receive any signal from central control successively for 3minutes
	5	6	Transmission error from main PCB in the outdoor unit to central control	In the case that central control can not receive any signal from main PCB successively for 3minutes
	5	7	Transmission error from main PCB to inverter PCB in the outdoor unit	In the case that inverter PCB can not receive any signal from main PCB successively for 20 seconds

■ **Please refer to trouble shooting guide in service manual for each error title**

⚠ CAUTION

In case that the control box is opened and before checking electrical parts, it should be checked that the LED 01Y (Refer to next page) turned off (wait 3 minutes after main power OFF), otherwise it may cause electrical shock.

Position of the LED01Y in inverter board

CRUN1008T0 Inverter board

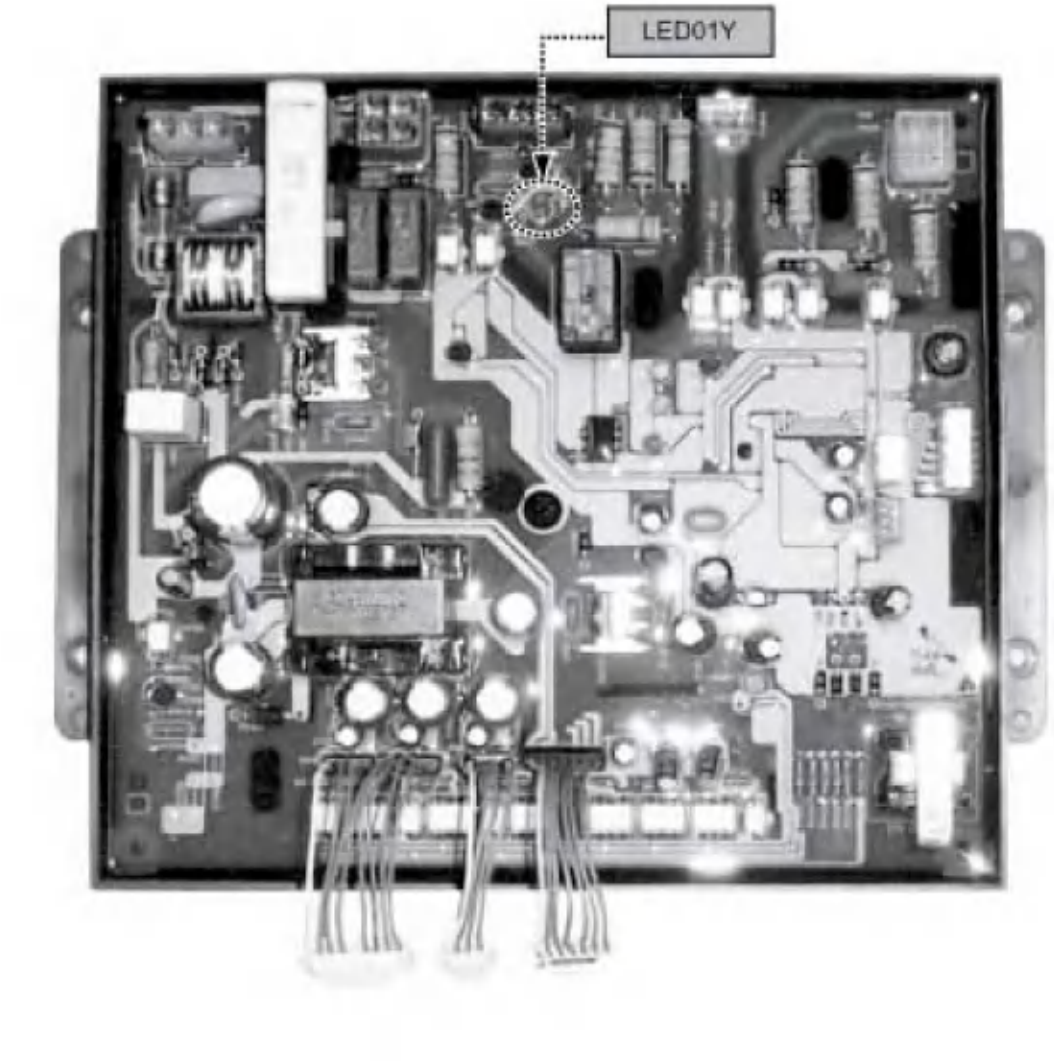

Appendix

CRUN458S0

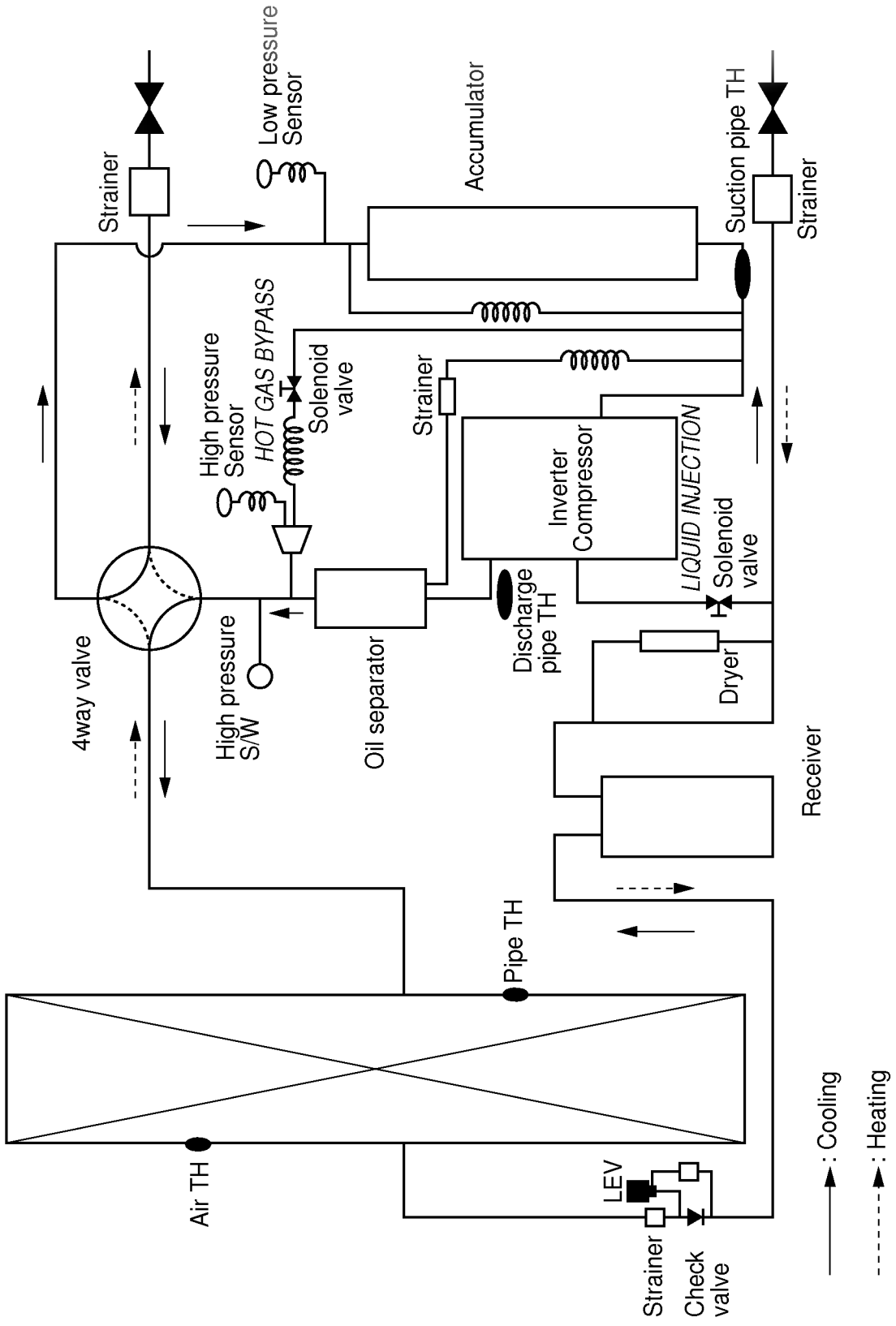
Low pressure Sensor
Accumulator
Strainer
Suction pipe TH
Strainer
High pressure Sensor
HOT GAS BYPASS
Solenoid valve
Strainer
Inverter Compressor
LIQUID INJECTION
Solenoid valve
4way valve
High pressure S/W
Oil separator
Discharge pipe TH
Dryer
Receiver
Pipe TH
Air TH
LEV
Strainer
Check valve
: Cooling
: Heating

CRUN1008T0

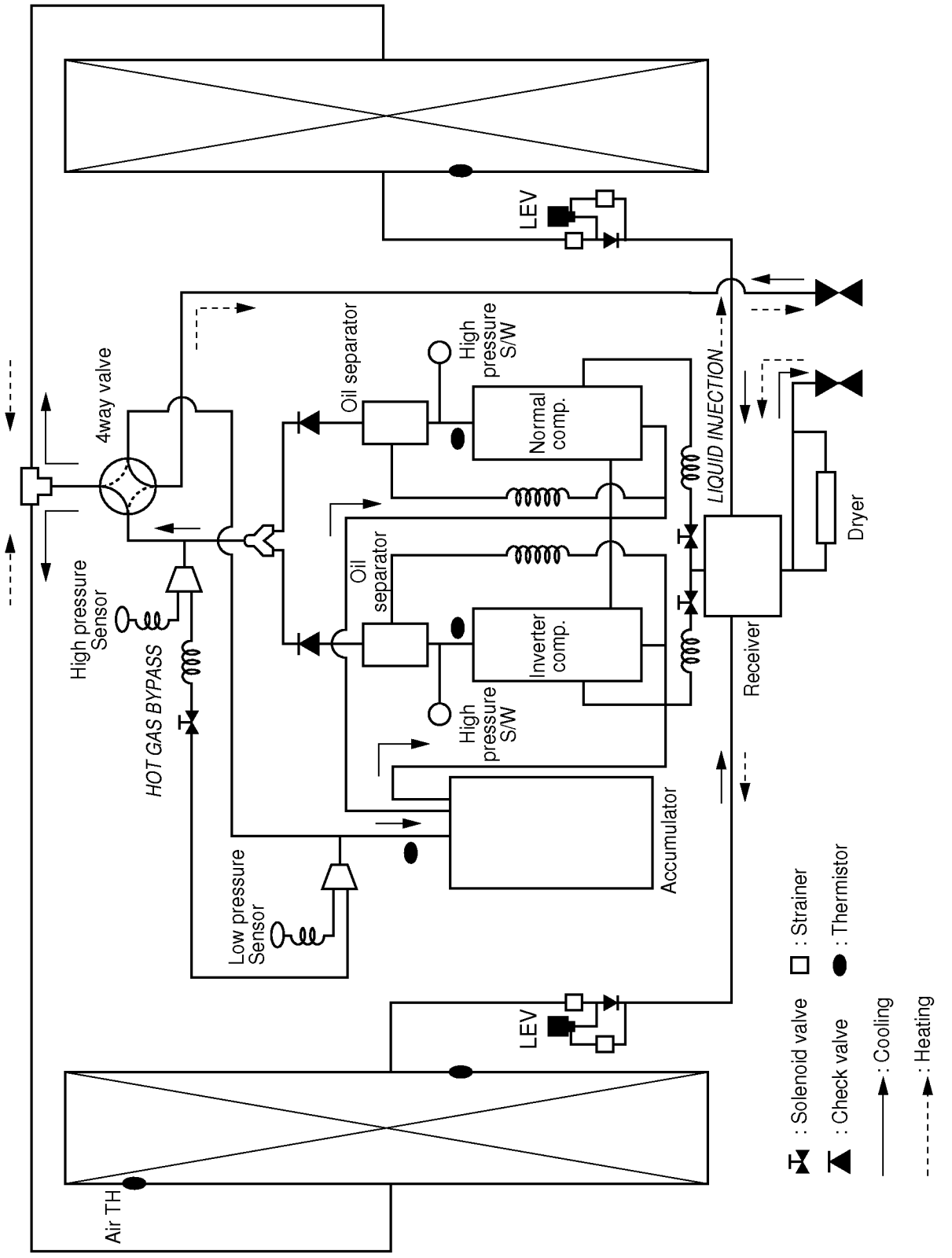
LEV
4way valve
Oil separator
High pressure S/W
Normal comp.
LIQUID INJECTION
Dryer
High pressure Sensor
HOT GAS BYPASS
Oil separator
Inverter comp.
Receiver
High pressure S/W
Accumulator
Low pressure Sensor
LEV
Air TH
: Solenoid valve
: Strainer
: Thermistor
: Check valve
: Cooling
: Heating

Main cause of gas leakage is defect in flaring work. Carry out correct flaring work in the following procedure.

1) Cut the pipes and the cable.

- Use the accessory piping kit or the pipes purchased locally.
- Measure the distance between the indoor and the outdoor unit.
- Cut the pipes a little longer than measured distance.
- Cut the cable 1.5m longer than the pipe length.

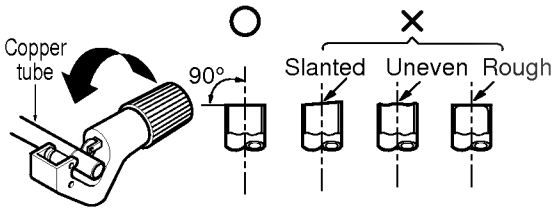

2) Burrs removal

- Completely remove all burrs from the cut cross section of pipe/tube.
- Put the end of the copper tube/pipe to downward direction as you remove burrs in order to avoid to let burrs drop in the tubing.

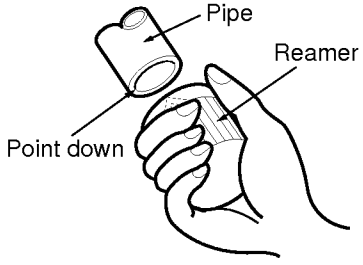

3) Putting nut on

- Remove flare nuts attached to indoor and outdoor units, then put them on pipe/tube having completed burr removal.
  (Not possible to put them on after flaring work)

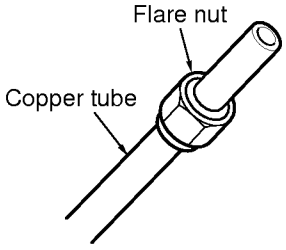

4) Flaring work

- Carry out flaring work using flaring tool as shown below.

Capacity	Outside Diameter		"A"	
	Gas	Liquid	Gas	Liquid
18k Btu/h	5/8"	1/4"	0.8~1.0	0~0.5
24k Btu/h	5/8"	1/4"	0.8~1.0	0~0.5
30k Btu/h	5/8"	3/8"	0.8~1.0	0.5~0.8
36k Btu/h	5/8"	3/8"	0.8~1.0	0.5~0.8
42k Btu/h	3/4"	3/8"	1.0~1.3	0.5~0.8
48k Btu/h	3/4"	3/8"	1.0~1.3	0.5~0.8
60k Btu/h	3/4"	1/2"	1.0~1.3	0.5~0.8

Firmly hold copper tube in a bar(or die) as indicated dimension in the table above.

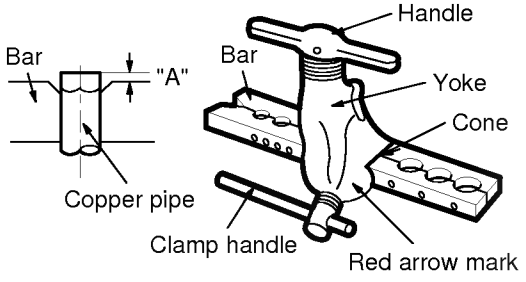

5) Check

- Compare the flared work with figure below.
- If flare is noted to be defective, cut off the flared section and do flaring work again.

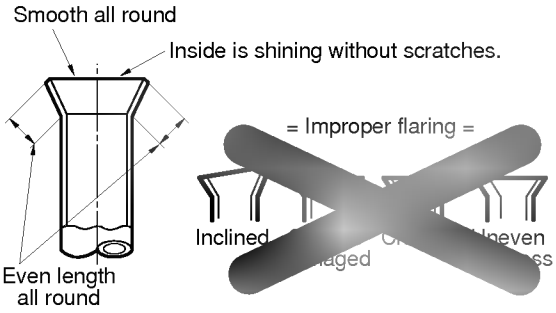

Piping Connection

1. Form the piping according to its routing. Avoid bending and bending back the same piping point more than three times. (This will result in hardening the pipe.)
2. After deforming the piping, align centers of the union fitting of the indoor unit and the piping, and tighten them firmly with wrenches.
3. Connect pipe to the service valve or ball valve which is located below the outdoor unit.
4. After completing the piping connection, be sure to check if there is gas leakage in indoor and outdoor connection.

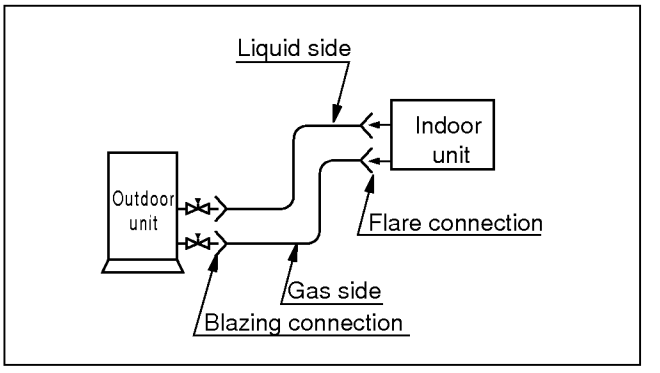

Vacuum drying

After completing the piping connection, execute vacuum drying for the connecting piping and the indoor unit.
The vacuum drying must be carried out using the service ports of both the liquid and gas side valves.

Capacity(kW)	Liquid side piping(mm)	Gas side piping(mm)
5.3, 7.0	Ø6.35	Ø9.53
8.8	Ø9.53	Ø9.53
10.5	Ø9.53	Ø9.53
12.3	Ø9.53	Ø19.05
14.1	Ø9.53	Ø19.05
17.6	Ø12.7	Ø19.05

CAUTION

Use two wrenches and tighten with regular torque.

Flare nut fastening torque	
Ø6.35mm	1.8kg·m
Ø9.52mm	4.0kg·m
Ø12.7mm	5.5kg·m
Ø15.88mm	6.6kg·m
Ø19.05mm	6.6kg·m

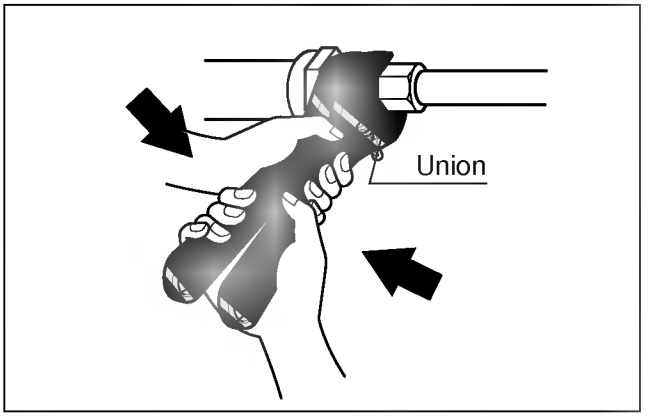

HEAT INSULATION

1. Use the heat insulation material for the refrigerant piping which has an excellent heat-resistance (over 120℃).

2. Precautions in high humidity circumstance:
   This air conditioner has been tested according to the "KS Standard Conditions with Mist" and confirmed that there is not any default. However, if it is operated for a long time in high humid atmosphere (dew point temperature: more than 23℃), water drops are liable to fall. In this case, add heat insulation material according to the following procedure:

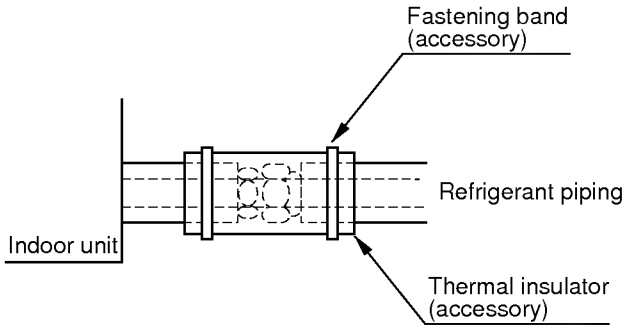

   - Heat insulation material to be prepared... Adiabatic glass wool with thickness 10 to 20mm.
   - Stick glass wool on all air conditioners that are located in ceiling atmosphere.
   - In addition to the normal heat insulation (thickness: more than 8mm) for refrigerant piping (gas piping: thick piping) and drain piping, add further 10mm to 30mm thickness material.

1. Drain pipe gradient and support

1) - The drain pipe must be fitted at a gradient of at least 1/100.
   - The drain pipe should be as short as possible and free from airlocks.

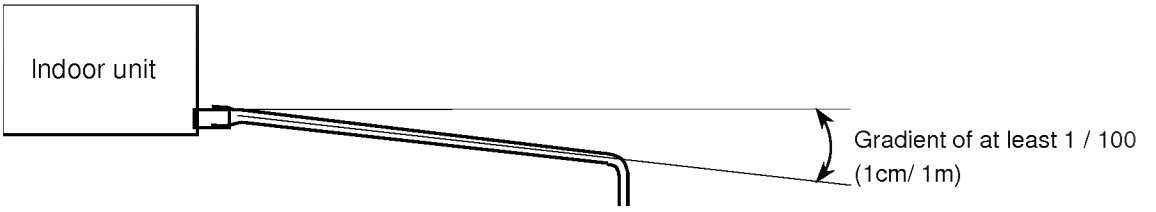

2) Suspension bolts should be used to support long stretches of drain pipe in order to ensure that a gradient of 1/100 is maintained.(PVC pipe should not be bent)

Spacing of supports for horizontal piping

Class	Nominal diameter	Spacing
Rigid PVC pipe	25~40mm	1.0m or less

3) The length of pipe laid horizontally should be kept a minimum.

2. Drain trap

Fit any indoor unit whose drain pipe connection is subjected to negative pressure, with a drain trap.

1) Rig the drain trap as shown in the drawing below

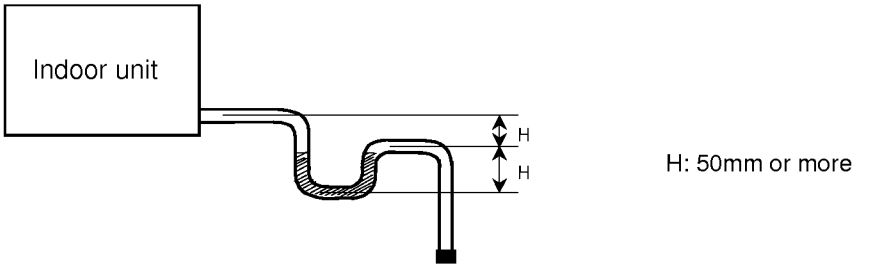

2) Provide one trap per unit. A single trap for converging units will prove ineffective.

3) Rig the trap to allow for future changing.

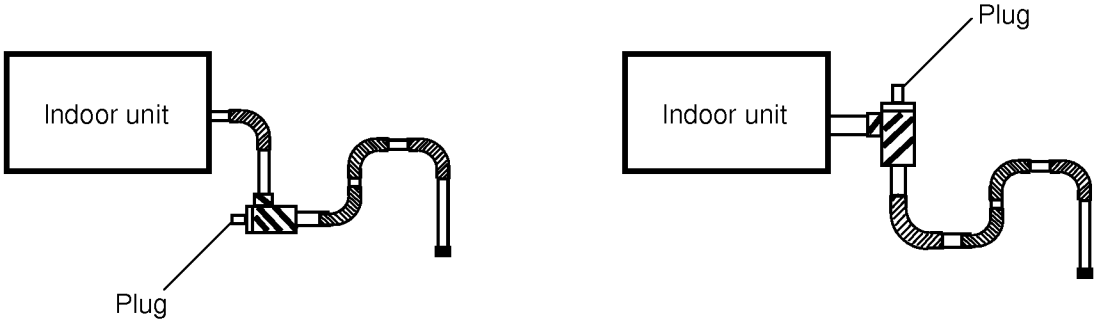

3. Grouped drain piping

1) It is standard work practice to make connections to the main pipe from above. The pipe down from the combination should be as large as possible.

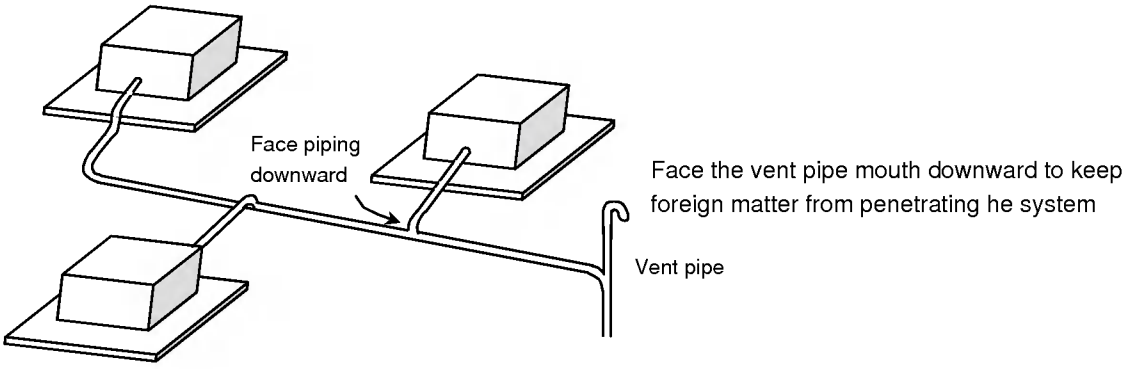

2) The pipe work should be kept as short as possible and the number of indoor units per group kept to a minimum.

4. Use of an auxiliary drain hose(flexible)

1) If the drain pan made of polystyrene foam is used then an auxiliary drain hose(flexible) is also essential A flexible drain hose permits the drain socket and drain pipe to be connected without difficulty and prevents any undue strain being placed on the drain pan.

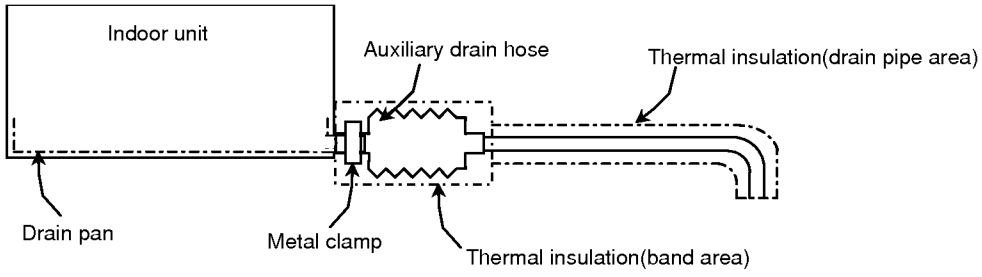

■ Important points

- The drain pipe should be at least equal in size to that of the indoor unit.
- The drain pipe is thermally insulated to prevent the formation of condensation inside the pipe.
- The drain up mechanism should be fitted before the indoor unit is installed and when the electricity has been connected some water should be added to the drain pan and the drain pump check to see that it is functioning correctly.
- All connections should be secure.(Special care is needed with PVC pipe)
- Insulate auxiliary drain hose by thermal insulation band.

Checked date

Delivered date

Check ordered date

MULTI V™

System Check List

Customer		System name	

Outdoor unit

Location	Model	Serial No.	Optional equipment
		No.	

< Additional refrigerant charge > kg

Remarks

Installed by Checked by

Indoor unit

	Location	Model	Serial No.	Centralized control group No.	Field setting	Optional equipment
A			No.			
B			No.			
C			No.			
D			No.			
E			No.			
F			No.			
G			No.			
H			No.			
I			No.			
J			No.			
K			No.			
L			No.			
M			No.			
N			No.			
O			No.			
P			No.			

		INSPECTION ITEM	INSPECTION METHOD	STANDARD	ACTUAL MEASUREMENT	Judge-ment
Prior to power on		Breaker capacity	Visual inspection	Specified capacity	A	
	Outdoor unit	Refrigerant piping system	Gas leak detector	No leakage	YES NO	
		Heat exchanger	Visual inspection	No clogging or damage	Good Bad	
		Terminal connection	Screwdriver, etc.	No loosening	Good Bad	
		Fan motor insulation	500V mega tester	Over 1MΩ	MΩ	
		Compressor insulation	500V mega tester	Over 1MΩ	No. 1 MΩ No. 2 MΩ	
		Installation condition	Visual inspection	Short-circuit, etc.	Good Bad	
		Airtight Test with Nitrogen gas	Under 2.94 Mpa for 24 hours or more		YES NO	
		Evacuation	Under the pressure of 5 tor. for 3 hours or more		YES NO	
	Indoor unit	Refrigerant piping system	Gas leak detector	No leakage	Room A G/B Room B G/B Room C G/B Room D G/B Room E G/B Room F G/B Room G G/B Room H G/B Room I G/B Room J G/B Room K G/B Room L G/B Room M G/B Room N G/B Room O G/B Room P G/B	
		Air filter	Visual inspection	No clogging or damage	Room A G/B Room B G/B Room C G/B Room D G/B Room E G/B Room F G/B Room G G/B Room H G/B Room I G/B Room J G/B Room K G/B Room L G/B Room M G/B Room N G/B Room O G/B Room P G/B	
		Heat exchanger	Visual inspection	No clogging or damage	Room A G/B Room B G/B Room C G/B Room D G/B Room E G/B Room F G/B Room G G/B Room H G/B Room I G/B Room J G/B Room K G/B Room L G/B Room M G/B Room N G/B Room O G/B Room P G/B	
		Fan motor insulation	500V mega tester	Over 1MΩ	Room A G/B Room B G/B Room C G/B Room D G/B Room E G/B Room F G/B Room G G/B Room H G/B Room I G/B Room J G/B Room K G/B Room L G/B Room M G/B Room N G/B Room O G/B Room P G/B	
		Aux. heater insulation	500V mega tester	Over 1MΩ	Room A G/B Room B G/B Room C G/B Room D G/B Room E G/B Room F G/B Room G G/B Room H G/B Room I G/B Room J G/B Room K G/B Room L G/B Room M G/B Room N G/B Room O G/B Room P G/B	
		Installation condition	Visual inspection	Short-circuit, etc.	Room A G/B Room B G/B Room C G/B Room D G/B Room E G/B Room F G/B Room G G/B Room H G/B Room I G/B Room J G/B Room K G/B Room L G/B Room M G/B Room N G/B Room O G/B Room P G/B	

(Remarks)

		INSPECTION ITEM	INSPECTION METHOD	STANDARD	ACTUAL MEASUREMENT	Judge-ment
Prior to power on	Outdoor unit	Main power source voltage	Tester	±10% of rated voltage	V	
		Operation circuit voltage	Tester	±10% of rated voltage	V	
		Fan rotation direction	Visual inspection	Positive direction	Good Bad	
		Fan noise and vibration	Listen and touch	None	Good Bad	
		Fan operating current	Clamp meter		A	
		Inter air temperature	Thermometer	Temp. difference At cooling: 9-11°C At heating: 2-3.5°C	°C	
		Outlet air temperature	Thermometer		°C	
		Compressor suction pressure	Pressure gauge		kg/cm² INVERTER / kg/cm² Standard	
		Compressor dicharge pressure	Pressure gauge		kg/cm² INVERTER / kg/cm² Standard	
		Compressor operating current	Clamp meter		A INVERTER / A Standard	
		Compressor frequency	LED display		INV Hz	
		Suction pipe temperature	Thermometer	3-15°C	No. °C / No. °C	
		Discharge pipe temperature	Thermometer	85-105°C	No. °C / No. °C	
		Crankcase heater	Touch by hand.	Should be heated.	No. 1 Good Bad / No. 1 Good Bad	
		Airtight Test with Nitrogen gas	Under 2.94 Mpa for 24 hours ro more		YES NO	
		Evacuation	Under the pressure of 5 tor. for 3 hours or more		YES NO	
	Indoor unit	Power source voltage	Tester	±10% of rated voltage	Room A G/B Room B G/B Room C G/B Room D G/B Room E G/B Room F G/B Room G G/B Room H G/B Room I G/B Room J G/B Room K G/B Room L G/B Room M G/B Room N G/B Room O G/B Room P G/B	
		Inlet air temperature	Thermometer	Temp. difference At cooling: 9-13°C At heating: 15-20°C	Room A G/B Room B G/B Room C G/B Room D G/B Room E G/B Room F G/B Room G G/B Room H G/B Room I G/B Room J G/B Room K G/B Room L G/B Room M G/B Room N G/B Room O G/B Room P G/B	
		Outlet air temperature	Thermometer		Room A G/B Room B G/B Room C G/B Room D G/B Room E G/B Room F G/B Room G G/B Room H G/B Room I G/B Room J G/B Room K G/B Room L G/B Room M G/B Room N G/B Room O G/B Room P G/B	
		Fan rotation direction	Visual inspection	Right direction	Room A G/B Room B G/B Room C G/B Room D G/B Room E G/B Room F G/B Room G G/B Room H G/B Room I G/B Room J G/B Room K G/B Room L G/B Room M G/B Room N G/B Room O G/B Room P G/B	
		Fan noise and vibration	Listen and touch	–	Room A G/B Room B G/B Room C G/B Room D G/B Room E G/B Room F G/B Room G G/B Room H G/B Room I G/B Room J G/B Room K G/B Room L G/B Room M G/B Room N G/B Room O G/B Room P G/B	
		Fan operating current	Clamp meter	–	Room A G/B Room B G/B Room C G/B Room D G/B Room E G/B Room F G/B Room G G/B Room H G/B Room I G/B Room J G/B Room K G/B Room L G/B Room M G/B Room N G/B Room O G/B Room P G/B	

(Remarks)