User's Guide

L1750H
L1950H
L1751H
L1951H
L1750HQ
L1950HQ
L1751HQ
L1951HQ

Make sure to read the **Important Precautions** before using the product.

Keep the User's Guide(CD) in an accessible place for furture reference.

See the label attached on the back cover and quote this information to your dealer when you require service.

LG

This unit has been engineered and manufactured to ensure your personal safety, however improper use may result in potential eletrical shock or fire hazards. In order to allow the proper operation of all safeguards incorporated in this display, observe the following basic rules for its installation, use, and servicing.

On Safety

Use only the power cord supplied with the unit. In case you use another power cord, make sure that it is certified by the applicable national standards if not being provided by the supplier. If the power cable is faulty in any way, please contact the manufacturer or the nearest authorized repair service provider for a replacement.

The power supply cord is used as the main disconnection device. Ensure that the socket-outlet is easily accessible after installation.

Operate the display only from a power source indicated in the specifications of this manual or listed on the display. If you are not sure what type of power supply you have in your home, consult with your dealer.

Overloaded AC outlets and extension cords are dangerous. So are frayed power cords and broken plugs. They may result in a shock or fire hazard. Call your service technician for replacement.

Do not Open the Display.

- There are no user serviceable components inside.
- There are Dangerous High Voltages inside, even when the power is OFF.
- Contact your dealer if the display is not operating properly.

To Avoid Personal Injury :

- Do not place the display on a sloping shelf unless properly secured.
- Use only a stand recommended by the manufacturer.

To Prevent Fire or Hazards:

- Always turn the display OFF if you leave the room for more than a short period of time. Never leave the display ON when leaving the house.
- Keep children from dropping or pushing objects into the display's cabinet openings. Some internal parts carry hazardous voltages.
- Do not add accessories that have not been designed for this display.
- During a lightning storm or when the display is to be left unattended for an extended period of time, unplug it from the wall outlet.

On Installation

Do not allow anything to rest upon or roll over the power cord, and do not place the display where the power cord is subject to damage.

Do not use this display near water such as near a bathtub, washbowl, kitchen sink, laundry tub, in a wet basement, or near a swimming pool.
Displays are provided with ventilation openings in the cabinet to allow the release of heat generated during operation. If these openings are blocked, built-up heat can cause failures which may result in a fire hazard. Therefore, NEVER:

- Block the bottom ventilation slots by placing the display on a bed, sofa, rug, etc.
- Place the display in a built-in enclosure unless proper ventilation is provided.
- Cover the openings with cloth or other material.
- Place the display near or over a radiator or heat source.

Do not rub or strike the Active Matrix LCD with anything hard as this may scratch, mar, or damage the Active Matrix LCD permanently.

Do not press the LCD screen with your finger for a long time as this may cause some afterimages.

Some dot defects may appear as Red, Green or Blue spots on the screen.
However, this will have no impact or effect on the display performance.

If possible, use the recommended resolution to obtain the best image quality for your LCD display. If used under any mode except the recommended resolution, some scaled or processed images may appear on the screen. However, this is characteristic of the fixed-resolution LCD panel.

On Cleaning

- Unplug the display before cleaning the face of the display screen.
- Use a slightly damp (not wet) cloth. Do not use an aerosol directly on the display screen because over-spraying may cause electrical shock.

On Repacking

- Do not throw away the carton and packing materials. They make an ideal container in which to transport the unit. When shipping the unit to another location, repack it in its original material.

On Disposal

- The fluorescent lamp used in this product contains a small amount of mercury.
- Do not dispose of this product with general household waste.
  Disposal of this product must be carried out in accordance to the regulations of your local authority.

- **Before setting up the monitor, ensure that the power to the monitor, the computer system, and other attached devices is turned off.**

Connecting the stand base or Removing the stand base

1. Place the monitor with its front facing downward on a cushion or soft cloth.
2. Align the hooks on the stand base with the matching slots in the base of the monitor.
3. Insert the hooks into slots.

Warning: ***The tape and locking pin may only be removed from those monitors equipped with a standing base when the base is pulled up. Otherwise, you may be injured by the protruding sections of the stand.***

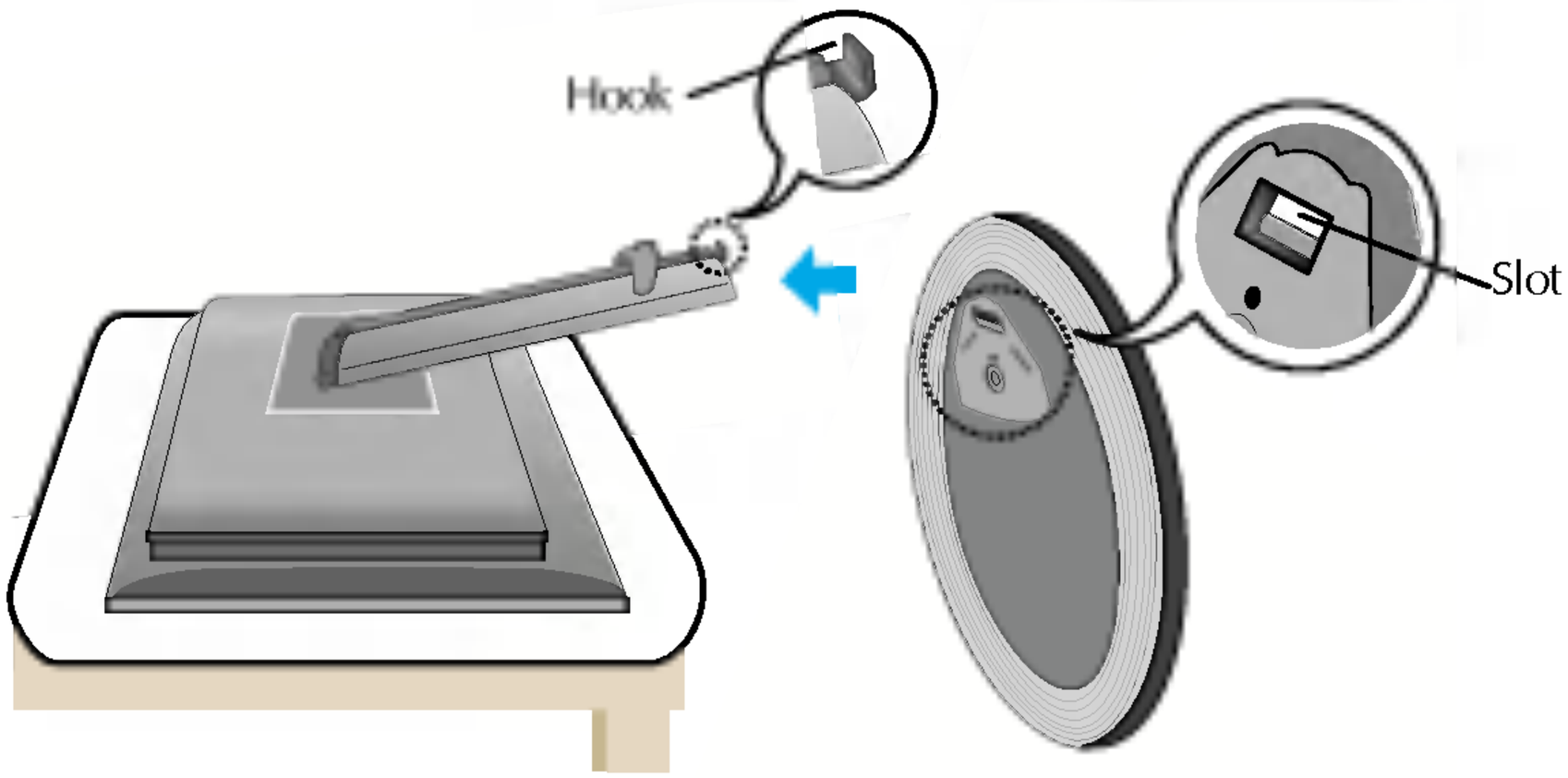

4. Use a coin on the back of the stand base and turn the screw clockwise to tighten.

5. When you desire to disintegrate the monitor from the stand base, use a coin to turn the screw counterclockwise.

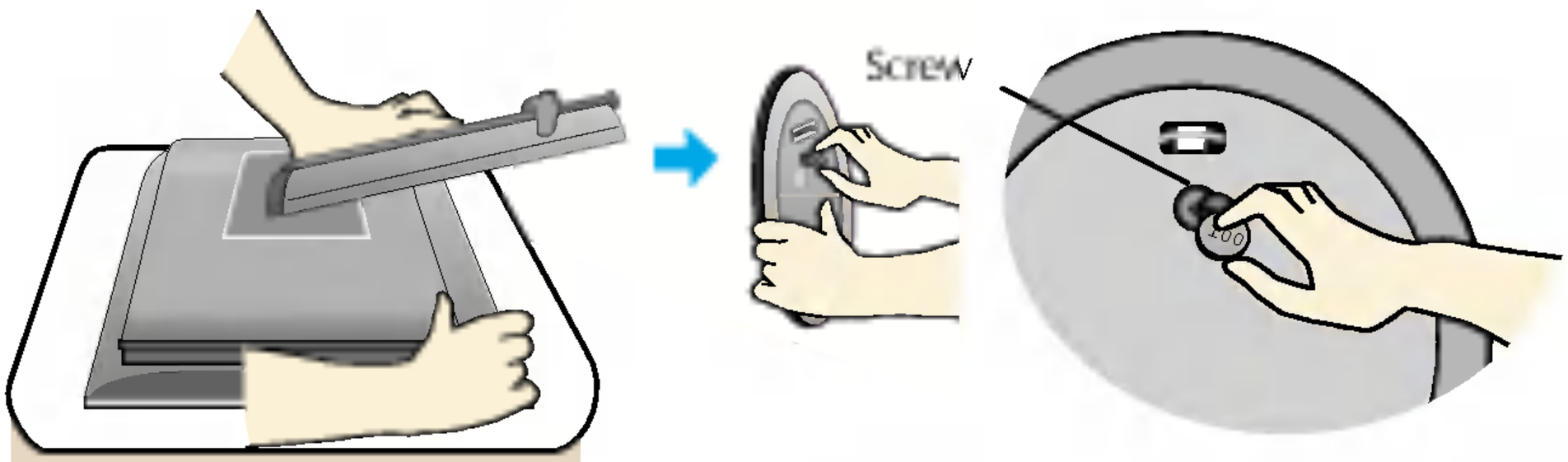

Important

- This illustration depicts the general model of connection. Your monitor may differ from the items shown in the picture.
- Once you connect the stand base, try not to disconnect it.
- Do not carry the product upside down holding only the stand base. The product may fall and get damaged or injure your foot.

- **Before setting up the monitor, ensure that the power to the monitor, the computer system, and other attached devices is turned off.**

Positioning your display

1. Adjust the position of the panel in various ways for maximum comfort.

- Tilt Range : -5˚~20˚

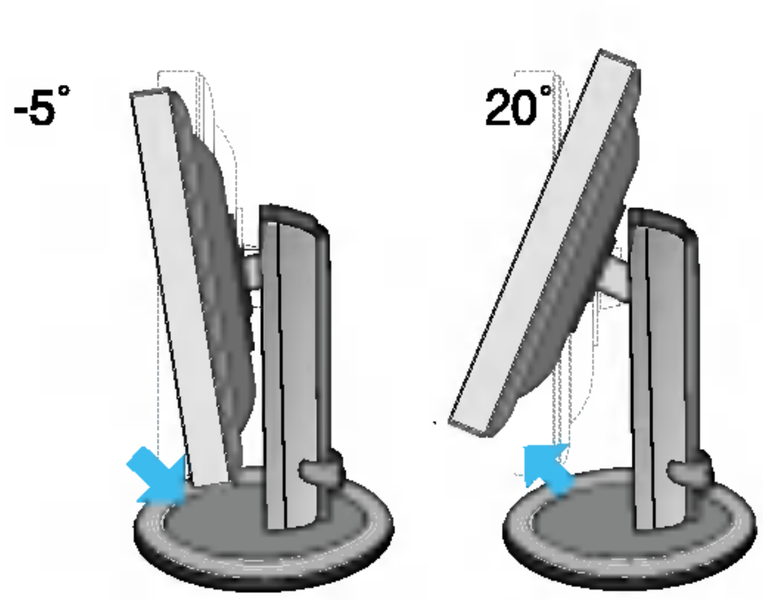

- Swivel :350˚

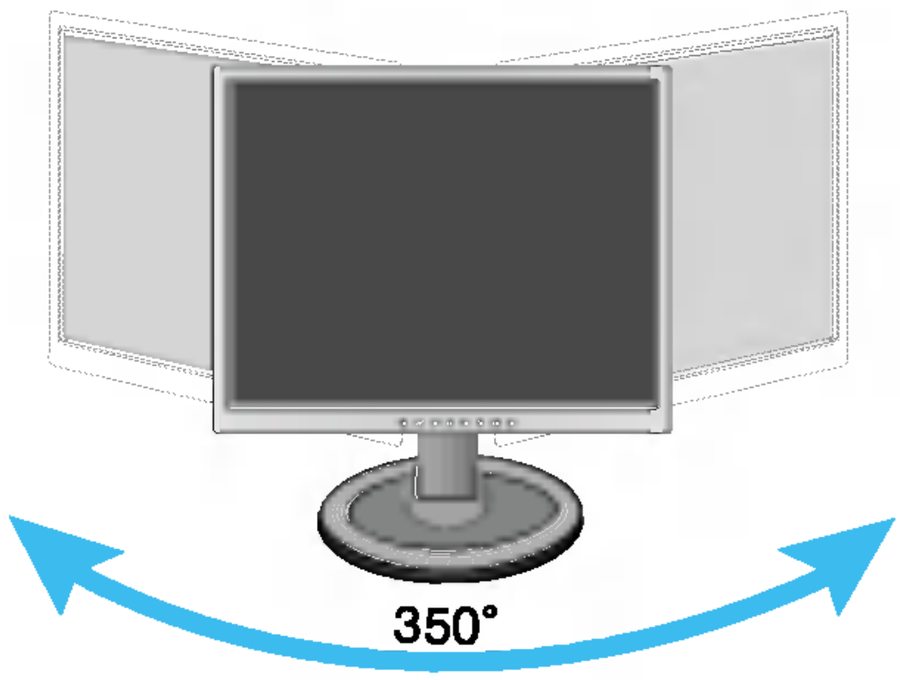

- Height Range : maximun 3.15 inch (80.0mm)

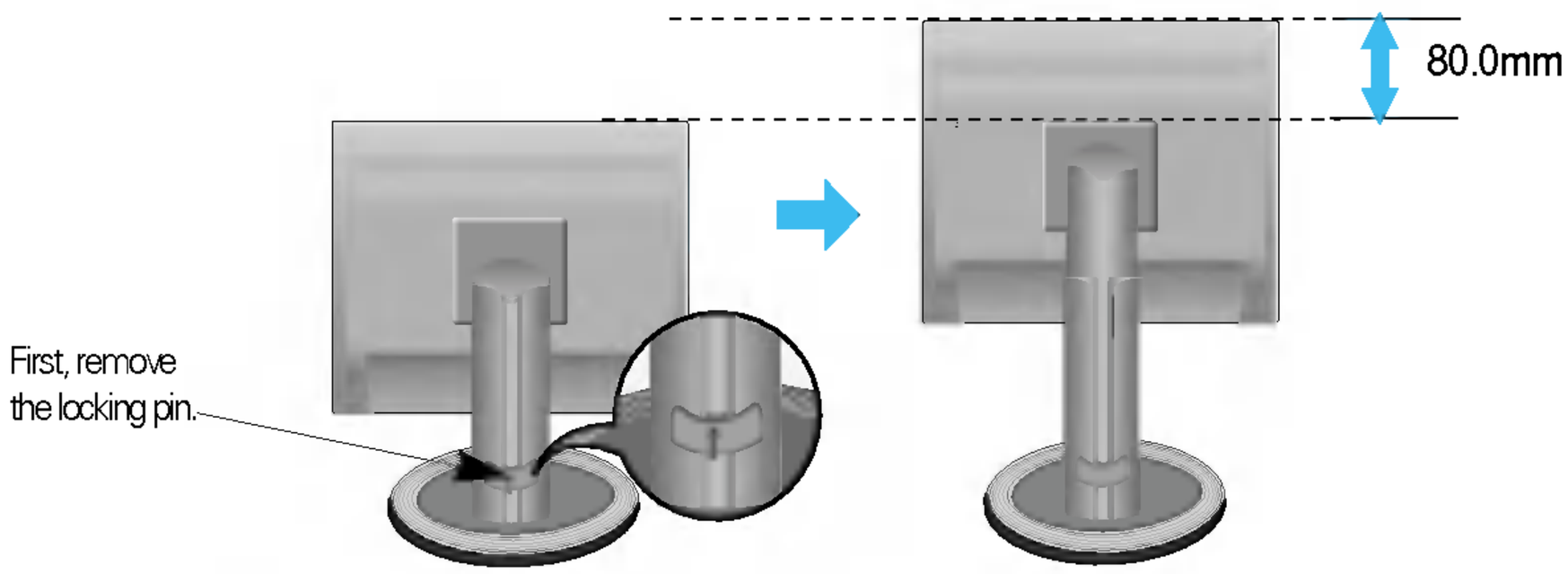

Ergonomic

It is recommended that in order to maintain an ergonomic and comfortable viewing position, the forward tilt angle of the monitor should not exceed 5 degrees.

Using the Computer

1. Place the monitor in a convenient, well-ventilated location near your computer. To adjust height of your monitor, unlock the stand lock on top of the stand.
2. Connect the signal cable. When attached, tighten the thumbscrews to secure the connection. ①
3. Connect the power cord into a proper power outlet that is easily accessible and close to the display. ②

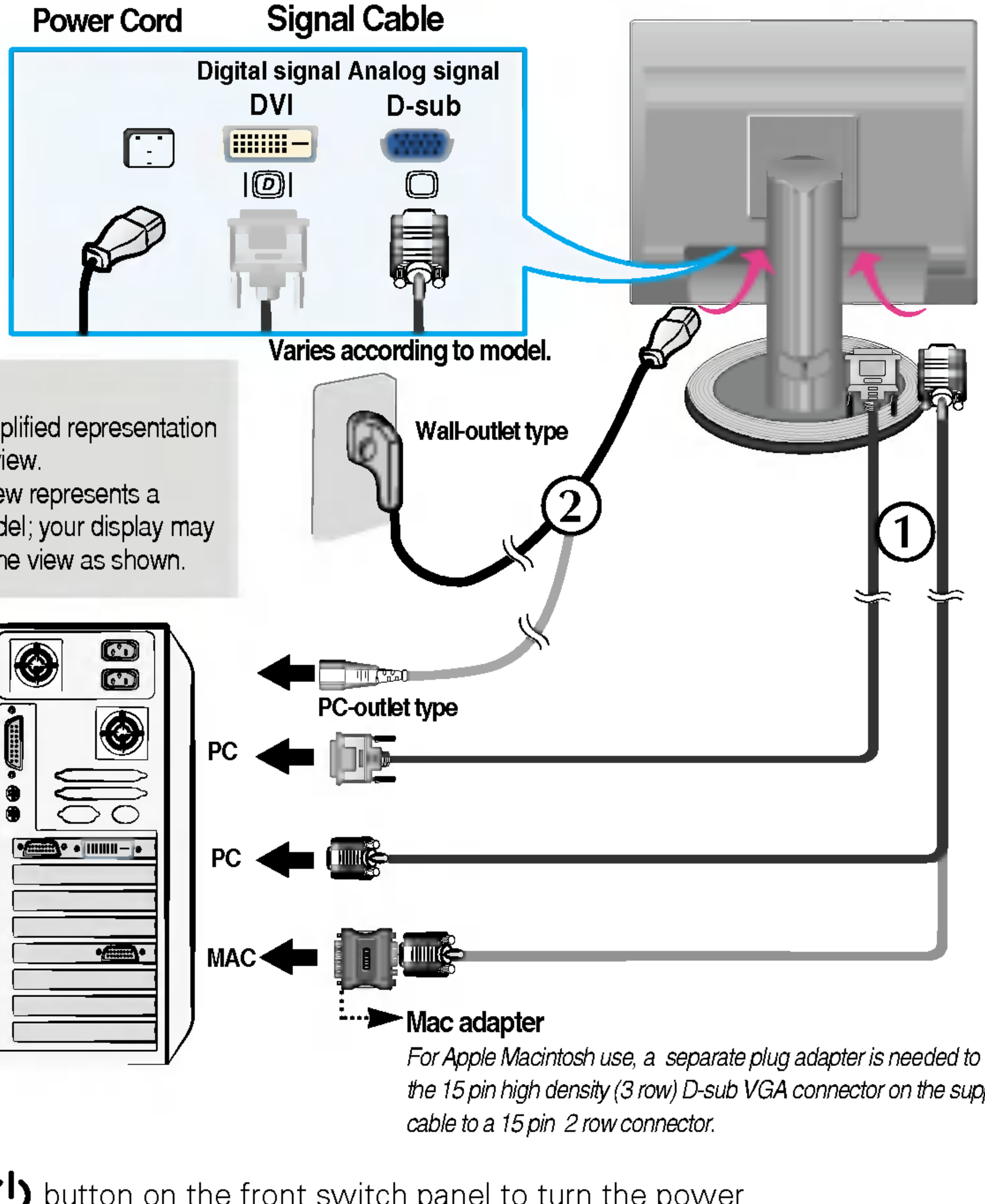

NOTE
- This is a simplified representation of the rear view.
- This rear view represents a general model; your display may differ from the view as shown.

For Apple Macintosh use, a separate plug adapter is needed to change the 15 pin high density (3 row) D-sub VGA connector on the supplied cable to a 15 pin 2 row connector.

4. Press ⏻ button on the front switch panel to turn the power on. When monitor power is turned on, the **'Self Image Setting Function'** is executed automatically.
(Only Analog Mode)



NOTE
‘ Self Image Setting Function’? This function provides the user with optimal display settings.When the user connects the monitor for the first time, this function automatically adjusts the display to optimal settings for individual input signals. If you want to adjust the monitor while in use, or wish to manually run this function once again, push the ‘AUTO/SET’ button on the front panel of the monitor. Otherwise, you may execute the ‘ Factory reset’ option on the OSD adjustment menu. However, be aware that this option initializes all the menu items except ‘Language’.

Front Panel Controls

<L1750H/L1750HQ/L1950H/L1950HQ>

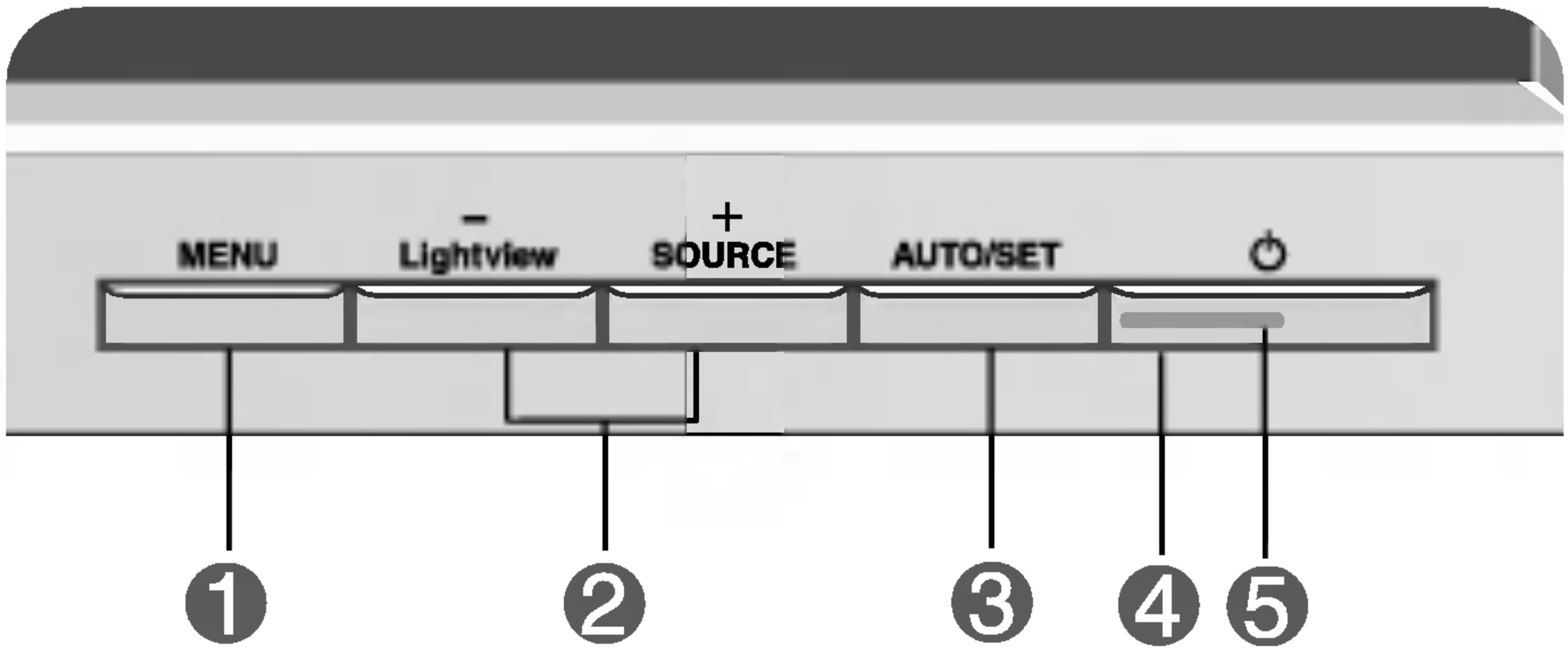

<L1751H/L1751HQ/L1951H/L1951HQ>

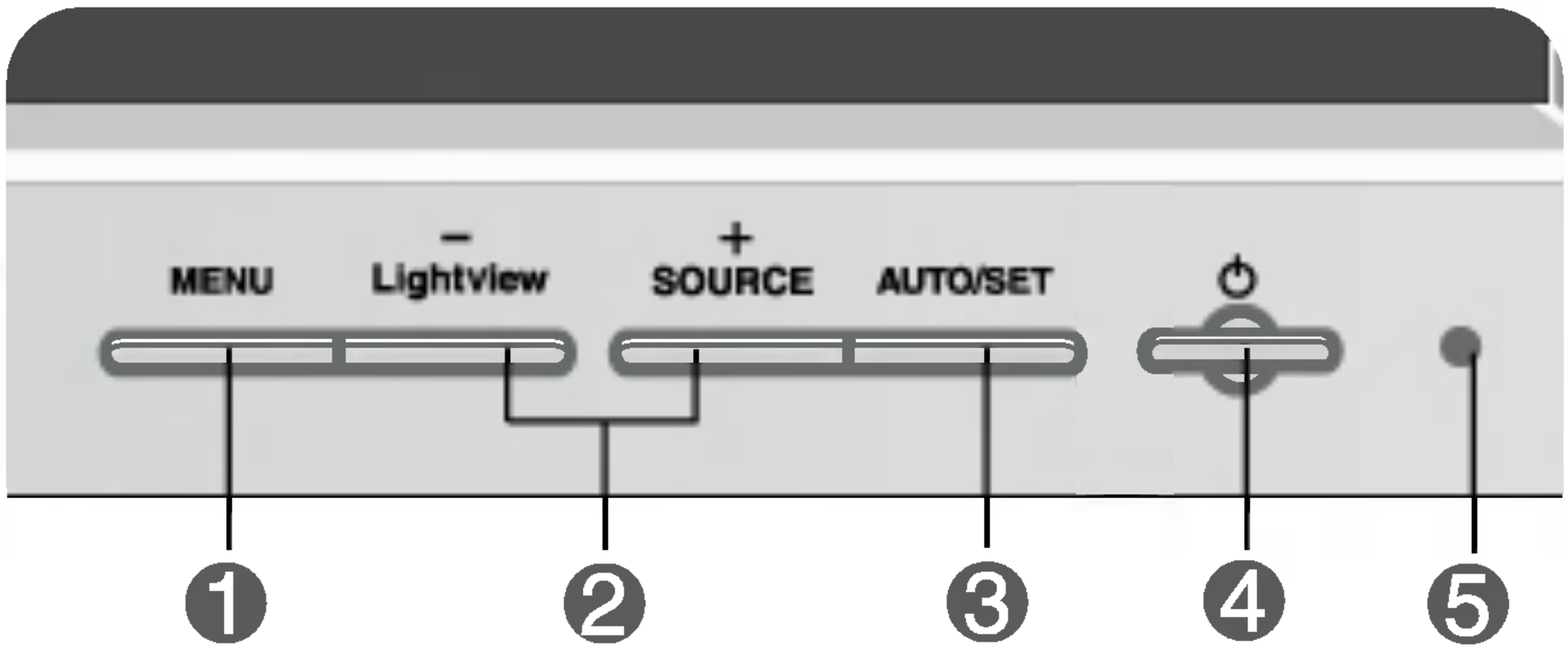

Control	Function
1 **MENU Button**	Use this button to enter or exit the On Screen Display.

OSD LOCKED/UNLOCKED



This function allows you to lock the current control settings, so that they cannot be inadvertently changed. Press and hold the **MENU button** for 5 seconds. The message "**OSD LOCKED**" should appear.

You can unlock the OSD controls at any time by pushing the **MENU button** for 5 seconds. The message "**OSD UNLOCKED**" should appear.

Control	Function
② **- +** **Buttons**	Use these buttons to select or adjust functions in the On Screen Display.
- **Button** 	**Lightview hot key** **DAY** **NIGHT** This feature lets you easily select the best desired image condition optimized to the environment (ambient illumination, image types etc). • **DAY** : Bright ambient illumination • **NIGHT** : Dark ambient illumination • **TEXT** : For text images (Word processing etc.) • **MOVIE** : For animation images in videos or movies • **PHOTO** : For pictures or drawings • **NORMAL** : This is under normal operating conditions
+ **Button**	**SOURCE hot key** Use this button to make Dsub or DVI connector active. This feature is used when two computers are connected to the display. The default setting is Dsub.
③ **AUTO/SET Button**	Use this button to enter a selection in the On Screen Display.
	**AUTO IMAGE ADJUSTMENT** When adjusting your display settings, always press the **AUTO/SET** button before entering the On Screen Display(OSD). This will automatically adjust your display image to the ideal settings for the current screen resolution size (display mode). The best display mode is 17 inch monitor : **1280x1024** 19 inch monitor : **1280x1024**
④ **Power Button**	Use this button to turn the display on or off.
⑤ **Power Indicator**	This Indicator lights up green when the display operates normally(On Mode). If the display is in Sleep Mode (Energy Saving), this indicator color changes to amber.

Screen Adjustment

Making adjustments to the image size, position and operating parameters of the display is quick and easy with the On Screen Display Control system. A short example is given below to familiarize you with the use of the controls. The following section is an outline of the available adjustments and selections you can make using the OSD.

NOTE

- Allow the display to stabilize for at least 30 minutes before making image adjustments.

To make adjustments in the On Screen Display, follow these steps:

MENU → − + → AUTO/SET → − + → MENU

1. Press the **MENU Button**, then the main menu of the OSD appears.

2. To access a control, use the **− or + Buttons**. When the icon you want becomes highlighted, press the **AUTO/SET Button**.

3. Use the **− / + Buttons** to adjust the image to the desired level. Use the **AUTO/SET Button** to select other sub-menu items.

4. Push the **MENU Button** once to return to the main menu to select another function. Push the **MENU Button** twice to exit from the OSD.

The following table indicates all the On Screen Display control, adjustment, and setting menus.

Main menu	Sub menu		A	D	Reference
PICTURE	BRIGHTNESS		●	●	To adjust the brightness, contrast and gamma of the screen
	CONTRAST		●	●	
	GAMMA		●	●	
COLOR	PRESET	6500K	●	●	To customize the color of the screen
		9300K	●	●	
	RED		●	●	
	GREEN		●	●	
	BLUE		●	●	
POSITION	HORIZONTAL		●		To adjust the position of the screen
	VERTICAL		●		
TRACKING	CLOCK		●		To improve the clarity and stability of the screen
	PHASE		●		
SETUP	LANGUAGE		●	●	To customize the screen status for a user's operating environment
	OSD POSITION	HORIZONTAL	●	●	
		VERTICAL	●	●	
	WHITE BALANCE		●		
	POWER INDICATOR		●	●	
	FACTORY RESET		●	●	

● : Adjustable
A : Analog Input
D : Digital Input

NOTE

■ The order of icons may differ depending on the model (A9~A12).

You were introduced to the procedure of selecting and adjusting an item using the OSD system. Listed below are the icons, icon names, and icon descriptions of the all items shown on the Menu.

Press the MENU Button, then the main menu of the OSD appears.



NOTE

■ OSD (On Screen Display) menu languages on the monitor may differ from the manual.

Main menu	Sub menu	Description

PICTURE



BRIGHTNESS To adjust the brightness of the screen.

CONTRAST To adjust the contrast of the screen.

GAMMA Set your own gamma value. : -50/0/50
On the monitor, high gamma values display whitish images and low gamma values display high contrast images.

- **MENU** : Exit
- **－** : Decrease
- **＋** : Increase
- **SET** : Select another sub-menu

COLOR



PRESET Select the screen color.
- 6500K: Slightly reddish white.
- 9300K: Slightly bluish white.

RED Set your own red color levels.

GREEN Set your own green color levels.

BLUE Set your own blue color levels.

- **MENU** : Exit
- **－** : Decrease
- **＋** : Increase
- **SET** : Select another sub-menu

POSITION



HORIZONTAL To move image left and right.

VERTICAL To move image up and down.

- **MENU** : Exit
- **－** : Decrease
- **＋** : Increase
- **SET** : Select another sub-menu

Main menu	Sub menu	Description

TRACKING



- **MENU** : Exit
- **－** : Decrease
- **＋** : Increase
- **SET** : Select another sub-menu

CLOCK	To minimize any vertical bars or stripes visible on the screen background.The horizontal screen size will also change.
PHASE	To adjust the focus of the display. This item allows you to remove any horizontal noise and clear or sharpen the image of characters.

SETUP



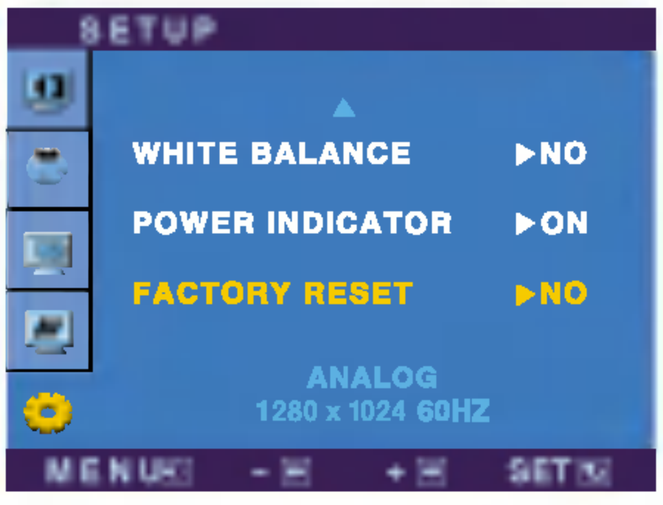

- **MENU** : Exit
- **－** : Adjust
- **＋** : Adjust
- **SET** : Select another sub-menu

LANGUAGE	To choose the language in which the control names are displayed.
OSD POSITION	To adjust position of the OSD window on the screen.
WHITE BALANCE	If the output of the video card is different the required specifications, the color level may deteriorate due to video signal distortion. Using this function, the signal level is adjusted to fit into the standard output level of the video card in order to provide the optimal image. Activate this function when white and black colors are present in the screen.
POWER INDICATOR	Use this function to set the power indicator on the front side of the monitor to **ON** or **OFF**. If you set **OFF**, it will go off. If you set **ON** at any time, the power indicator will automatically be turned on.
FACTORY RESET	Restore all factory default settings except **"LANGUAGE."** Press the ▶ button to reset immediately.

If this does not improve the screen image, restore the factory default settings.
If necessary, perform the white balance function again. This function will be enabled only when the input signal is an analog signal.

Check the following before calling for service.

No image appears	
◉ **Is the power cord of the display connected?**	• Check and see if the power cord is connected properly to the power outlet.
◉ **Is the power indicator light on?**	• Press the Power button.
◉ **Is the power on and the power indicator blue or green?**	• Adjust the brightness and the contrast.
◉ **Is the power indicator amber?**	• If the display is in power saving mode, try moving the mouse or pressing any key on the keyboard to bring up the screen. • Try to turn on the PC.
◉ **Do you see an "OUT OF RANGE" message on the screen?**	• This message appears when the signal from the PC (video card) is out of horizontal or vertical frequency range of the display. See the 'Specifications' section of this manual and configure your display again.
◉ **Do you see a "CHECK SIGNAL CABLE" message on the screen?**	• This message appears when the signal cable between your PC and your display is not connected. Check the signal cable and try again.

Do you see a "OSD LOCKED" message on the screen?	
◉ **Do you see “OSD LOCKED” when you push MENU button?**	• You can secure the current control settings, so that they cannot be inadvertently changed. You can unlock the OSD controls at any time by pushing the **MENU** button for 5 seconds: the message **“OSD UNLOCKED”** will appear.

Display image is incorrect

◉ **Display Position is incorrect.**	• Press the **AUTO/SET** button to automatically adjust your display image to the ideal setting. If the results are unsatisfactory, adjust the image position using the **H position and V position** icon in the on screen display. • Check **Control Panel --> Display --> Settings** and see if the frequency or the resolution were changed. If yes, readjust the video card to the recommend resolution.
◉ **On the screen background, vertical bars or stripes are visible.**	• Press the **AUTO/SET** button to automatically adjust your display image to the ideal setting. If the results are unsatisfactory, decrease the vertical bars or stripes using the **CLOCK** icon in the on screen display.
◉ **Any horizontal noise appearing in any image or characters are not clearly portrayed.**	• Press the **AUTO/SET** button to automatically adjust your display image to the ideal setting. If the results are unsatisfactory, decrease the horizontal bars using the **PHASE** icon in the on screen display. • Check **Control Panel --> Display --> Settings** and adjust the display to the recommended resolution or adjust the display image to the ideal setting. Set the color setting higher than 24 bits (true color).
◉ **The screen color is mono or abnormal.**	• Check if the signal cable is properly connected and use a screwdriver to fasten if necessary. • Make sure the video card is properly inserted in the slot. • Set the color setting higher than 24 bits (true color) at **Control Panel - Settings**.
◉ **The screen blinks.**	• Check if the screen is set to interlace mode and if yes, change it to the recommend resolution. • Make sure the power voltage is high enough, It has to be higher than **AC100-240V 50/60Hz.**

Have you installed the display driver?

◉ **Have you installed the display driver?**	• Be sure to install the display driver from the display driver CD (or diskette) that comes with your display. Or, you can also download the driver from our web site: http://www.lge.com.
◉ **Do you see an "Unrecognized monitor, Plug&Play (VESA DDC) monitor found" message?**	• Make sure to check if the video card supports Plug&Play function.

Display	17 inches (43.2cm) Flat Panel Active matrix-TFT LCD Anti-Glare coating 17 inches viewable 0.26mm pixel pitch	
Sync Input	**Horizontal Freq.**	Analog:30 - 83kHz (Automatic) Digital:30 - 71kHz (Automatic)
	Vertical Freq.	56 - 75Hz (Automatic)
	Input Form	Separate TTL, Positive/Negative SOG (Sync On Green) Digital
Video Input	Signal Input	15 pin D-Sub Connector DVI - D connector (Digital)
	Input Form	RGB Analog (0.7Vp-p/75ohm), Digital
Resolution	Max	DVI Digital:VESA 1280 x 1024@60Hz D-sub Analog:VESA 1280 x 1024@75Hz
	Recommend	VESA 1280 x 1024@60Hz
Plug&Play	DDC 2B	
Power Consumption	0n Mode Sleep Mode Off Mode	: 43W ≤ 1W ≤ 1W
Dimensions &Weight (with tilt/ swivel stand)	Width	36.80 cm / 14.49 inches
	Height	42.18cm / 16.61 inches (Min) 50.18 cm /19.76 inches (Max)
	Depth	24.26cm / 9.55 inches
	Net	6.0 kg (13.23lbs)
Tilt/Swivel Range	Tilt	-5˚~20˚
	Swivel	350˚
	Height range	80.0mm / 3.15 inches
Power Input	AC 100-240V~ 50/60Hz 1.0A	
Environmental Conditions	Operating Conditions Temperature Humidity	 10˚C to 35 ˚C 10 % to 80 % non-Condensing
	Storage Conditions Temperature Humidity	 -20˚C to 60 ˚C 5 % to 95 % non-Condensing
Tilt/Swivel Stand	Attached( ), Detached (O)	
Signal cable	Attached( ), Detached (O)	
Power cord	Wall-outlet type or PC-outlet type	

NOTE

- Information in this document is subject to change without notice.

Display	19 inches (48.18cm) Flat Panel Active matrix-TFT LCD Anti-Glare coating 19 inches viewable 0.294mm pixel pitch	
Sync Input	Horizontal Freq.	Analog:30 - 83kHz (Automatic) Digital:30 - 71kHz (Automatic)
	Vertical Freq.	56 - 75Hz (Automatic)
	Input Form	Separate TTL, Positive/Negative SOG (Sync On Green) Digital
Video Input	Signal Input	15 pin D-Sub Connector DVI - D connector (Digital)
	Input Form	RGB Analog (0.7Vp-p/75ohm), Digital
Resolution	Max	DVI Digital:VESA 1280 x 1024@60Hz D-sub Analog:VESA 1280 x 1024@75Hz
	Recommend	VESA 1280 x 1024@60Hz
Plug&Play	DDC 2B	
Power Consumption	On Mode : 45W Sleep Mode ≤ 1W Off Mode ≤ 1W	
Dimensions &Weight (with tilt/ swivel stand)	Width	41.30 cm / 16.26 inches
	Height	43.72 cm / 17.21 inches (Min) 51.72 cm / 20.36 inches (Max)
	Depth	24.26 cm / 9.55 inches
	Net	6.7kg (14.77lbs)
Tilt/Swivel Range	Tilt	-5˚~20˚
	Swivel	350˚
	Height range	80.0mm / 3.15 inches
Power Input	AC 100-240V~ 50/60Hz 1.0A	
Environmental Conditions	Operating Conditions Temperature 10˚C to 35 ˚C Humidity 10 % to 80 % non-Condensing	
	Storage Conditions Temperature -20˚C to 60 ˚C Humidity 5 % to 95 % non-Condensing	
Tilt/Swivel Stand	Attached( ), Detached (O)	
Signal cable	Attached( ), Detached (O)	
Power cord	Wall-outlet type or PC-outlet type	

NOTE

- Information in this document is subject to change without notice.

Preset Modes (Resolution)

Display Modes (Resolution)			Horizontal Freq. (kHz)	Vertical Freq. (Hz)
1	VGA	640 x 350	31.469	70
2	VGA	720 x 400	31.468	70
3	VGA	640 x 480	31.469	60
4	VESA	640 x 480	37.500	75
5	VESA	800 x 600	37.879	60
6	VESA	800 x 600	46.875	75
7	MAC	832 x 624	49.725	75
8	VESA	1024 x 768	48.363	60
9	VESA	1024 x 768	60.023	75
10	MAC	1152 x 870	68.681	75
11	VESA	1152 x 900	61.805	65
12	VESA	1280 x 1024	63.981	60
*13	VESA	1280 x 1024	79.976	75

*13 Mode : Only Analog Mode.

Indicator

MODE	LED Color
On Mode	green
Sleep Mode	amber
Off Mode	Off

Signal Connector Pin Assignment

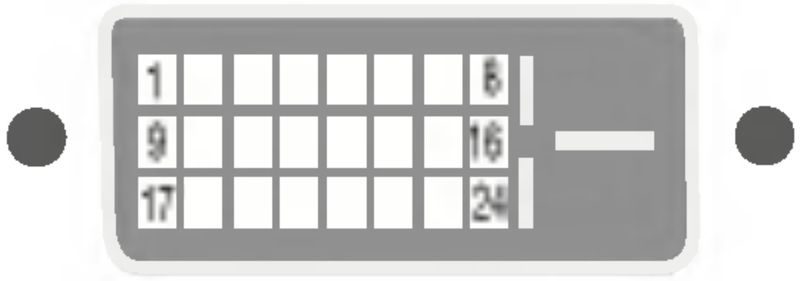

■ DVI-D Connector

Pin	Signal(DVI-D)	Pin	Signal(DVI-D)
1	T. M. D. S. Data2-	16	Hot Plug Detect
2	T. M. D. S. Data2+	17	T. M. D. S. Data0-
3	T. M. D. S. Data2/4 Shield	18	T. M. D. S. Data0+
4	T. M. D. S. Data4-	19	T. M. D. S. Data0/5 Shield
5	T. M. D. S. Data4+	20	T. M. D. S. Data5-
6	DDC Clock	21	T. M. D. S. Data5+
7	DDC Data	22	T. M. D. S. Clock Shield
8	Analog Vertical Sync.	23	T. M. D. S. Clock+
9	T. M. D. S. Data1-	24	T. M. D. S. Clock-
10	T. M. D. S. Data1+		
11	T. M. D. S. Data1/3 Shield		
12	T. M. D. S. Data3-		
13	T. M. D. S. Data3+		
14	+5V Power		
15	Ground (return for +5V, H. Sync. and V. Sync.)		

T. M. D. S. (Transition Minimized Differential Signaling)

This monitor meets VESA-compliant mounting interface pad specifications.

VESA wall mounting
Connected to another object (stand type and wall-mounted type. This monitor accepts a VESA-compliant mounting interface pad.- **optional**)
For further information, refer to the VESA Wall Mounting Instruction Guide.

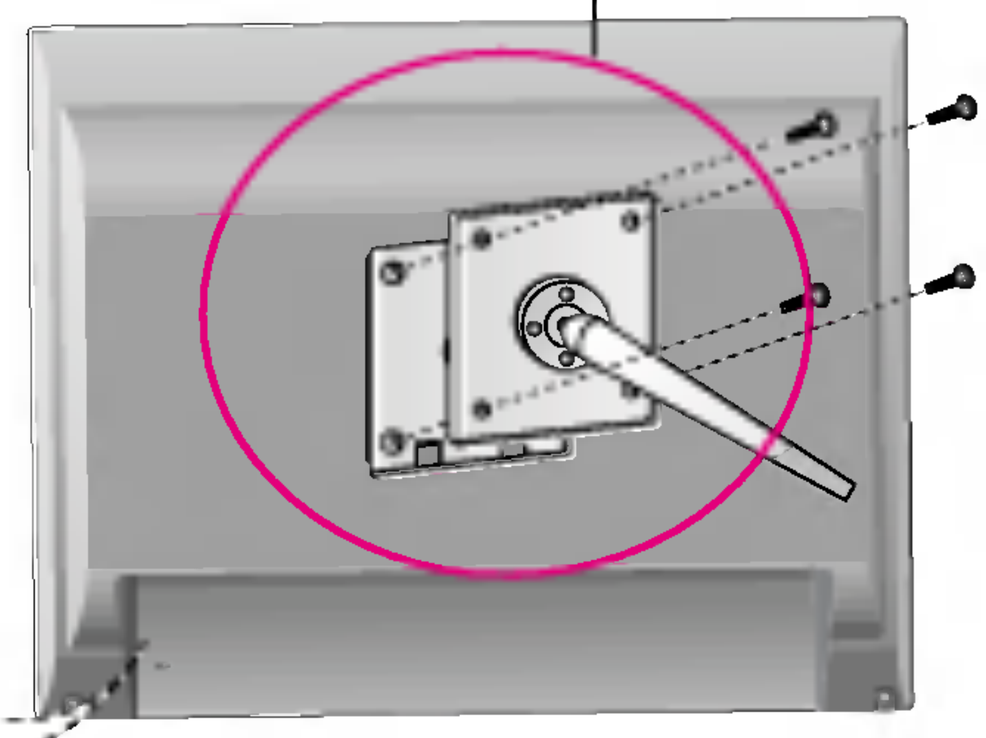



Kensington Security Slot- optional
Connected to a locking cable that can be purchased separately at most computer stores

Digitally yours

