DVD/CD RECEIVER

OWNER'S MANUAL

MODEL: LH-T6345
(Main Unit: LH-T6345D, Speakers: LHS-T6345T, LHS-T6345W)

Before connecting up, operating or repairing this product, please read this instruction booklet carefully and completely.



CAUTION

RISK OF ELECTRIC SHOCK
DO NOT OPEN



CAUTION: TO REDUCE THE RISK
OF ELECTRIC SHOCK
DO NOT REMOVE COVER (OR BACK)
NO USER-SERVICEABLE PARTS INSIDE
REFER SERVICING TO QUALIFIED SERVICE
PERSONNEL.



This lightning flash with arrowhead symbol within an equilateral triangle is intended to alert the user to the presence of uninsulated dangerous voltage within the product's enclosure that may be of sufficient magnitude to constitute a risk of electric shock to persons.



The exclamation mark within an equilateral triangle is intended to alert the user to the presence of important operating and maintenance (servicing) instructions in the instructions accompanying the product.

WARNING: TO PREVENT FIRE OR ELECTRIC SHOCK HAZARD, DO NOT EXPOSE THIS PRODUCT TO RAIN OR MOISTURE.

WARNING: Do not install this equipment in a confined space such as a book case or similar unit.

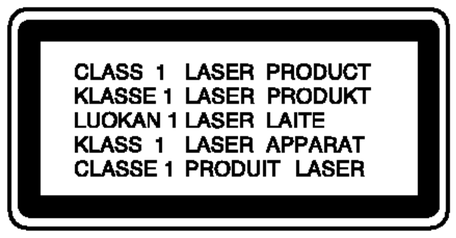

CAUTION:

This DVD/CD receiver employs a Laser System.

To ensure proper use of this product, please read this owner's manual carefully and retain it for future reference. Should the unit require maintenance, contact an authorized service location (see service procedure).

Performing controls, adjustments, or carrying out procedures other than those specified herein may result in hazardous radiation exposure.

To prevent direct exposure to laser beam, do not try to open the enclosure. Visible laser radiation when open. DO NOT STARE INTO BEAM.

CAUTION: The apparatus should not be exposed to water (dripping or splashing) and no objects filled with liquids, such as vases, should be placed on the apparatus.

CE This product is manufactured to comply with the radio interference requirements of EEC DIRECTIVE 89/336/EEC, 93/68/EEC and 73/23/EEC.

ON COPYRIGHTS:

It is forbidden by law to copy, broadcast, show, broadcast via cable, play in public, or rent copyrighted material without permission.

This product features the copy protection function developed by Macrovision. Copy protection signals are recorded on some discs. When recording and playing the pictures of these discs on a VCR, picture noise will appear.

This product incorporates copyright protection technology that is protected by method claims of certain U.S. patents and other intellectual property rights owned by Macrovision Corporation and other rights owners. Use of this copyright protection technology must be authorized by Macrovision Corporation, and is intended for home and other limited viewing uses only unless otherwise authorized by Macrovision Corporation. Reverse engineering or disassembly is prohibited.

SERIAL NUMBER: The serial number is located on the back of this unit. This number is unique to this unit and not available to others. You should record requested information here and retain this guide as a permanent record of your purchase.

Model No. _____

Serial No. _____

Contents

Introduction 4-9
- Symbol used in this Manual 4
- About the ✋ Symbol Display 4
- Notes on Discs 4
  - HANDLING DISCS 4
  - STORING DISCS 4
  - CLEANING DISCS 4
- Types of Playable Discs 5
  - REGIONAL CODE 5
- Disc-related terms 6
- Front Panel 7
- Display Window 7
- Remote Control 8
  - REMOTE CONTROL OPERATION RANGE 8
  - REMOTE CONTROL BATTERY INSTALLATION . .8
- Rear Panel 9

Installation and Setup 10-19
- TV Connections 10
- External Equipment Connection 11
- Aerial Connections 11
- Speaker System Connection 12
- Speaker Positioning 13
- Mini Glossary for Audio Stream & Surround Mode 14
- Sound Mode 14
- On-Screen Display 15
  - PLAYBACK STATUS/RESTRICTIONS 15
- Initial Settings 16-19
  - GENERAL OPERATION 16
  - LANGUAGE 16
    - • OSD 16
    - • Disc Audio / Subtitle / Menu 16
  - DISPLAY 16
    - • TV Aspect 16
    - • Display Mode 16
  - AUDIO 17
    - • 5.1 Speaker Setup 17
    - • Dynamic Range Control (DRC) 17
    - • Vocal 17
  - LOCK (Parental Control) 17
    - • Rating 17
    - • Password (Security Code) 18
    - • Country Code 18
  - OTHERS 18
    - • PBC 18
    - • DivX(R) Registration 18
- 5.1 Speaker Setup 19
  - SPEAKER SETUP 19
    - • Speaker 19
    - • Size 19
    - • Volume 19
    - • Distance 19
    - • Test 19

Operation 20-31
- Playing a DVD or Video CD 20-22
  - PLAYBACK SETUP 20
- General Features 20
  - MOVING TO ANOTHER TITLE 20
  - MOVING TO ANOTHER CHAPTER/TRACK 20
  - SEARCH 20
  - CHANGING THE AUDIO CHANNEL 20
  - STILL PICTURE AND FRAME-BY-FRAME PLAYBACK 21
  - SLOW SCAN 21
  - REPEAT A-B 21
  - REPEAT 21
  - TIME SEARCH 21
  - ZOOM 22
  - MARKER SEARCH 22
  - PAUSE 22
- Special DVD Features 22
  - CHECKING THE CONTENTS OF DVD DISCS: MENUS 22
  - TITLE MENU 22
  - DISC MENU 22
  - CAMERA ANGLE 22
  - CHANGING THE AUDIO LANGUAGE 22
  - SUBTITLES 22
- Playing an Audio CD or MP3/WMA Disc 23
- Audio CD and MP3 / WMA Disc Features 24
  - PAUSE 24
  - MOVING TO ANOTHER TRACK 24
  - REPEAT TRACK/ALL/OFF 24
  - SEARCH 24
- Programmed Playback 25
  - REPEAT PROGRAMMED TRACKS 25
  - ERASING A TRACK FROM PROGRAM LIST . . .25
  - ERASING THE COMPLETE PROGRAM LIST . . .25
- Viewing a JPEG Disc 26
  - SLIDE SHOW 26
  - STILL PICTURE 26
  - MOVING TO ANOTHER FILE 26
  - TO ROTATE PICTURE 26
- Maintenance and Service 27
  - HANDLING THE UNIT 27
- Playing a DivX Movie Disc 28
- Additional Features 29
  - LAST SCENE MEMORY 29
  - SYSTEM SELECT 29
  - SLEEP TIMER SETTING 29
  - DIMMER 29
  - MUTE 29
- Presetting the Radio Stations 30
- Listening to the Radio 30
- RDS Operation 31
  - RDS TUNING 31
  - RDS DISPLAY OPTIONS 31
- Programme Search (PTY) 31

Reference 32-35
- Language Codes 32
- Country Codes 32
- Troubleshooting 33-34
- Specifications 35

Introduction

To ensure proper use of this product, please read this owner's manual carefully and retain for future reference.

This manual provides information on the operation and maintenance of your DVD/CD receiver. Should the unit require service, contact an authorized service location.

Symbol Used in this Manual

The lightning flash symbol alerts you to the presence of dangerous voltage within the product enclosure that may constitute a risk of electric shock.

The exclamation point alerts you to the presence of important operating and maintenance / servicing instructions.

Indicates hazards likely to cause harm to the unit itself or other material damage.

Note:
Indicates special notes and operating features.

Tip:
Indicates tips and hints for making the task easier.

A section whose title has one of the following symbols is applicable only to the disc represented by the symbol.

DVD DVD and finalized DVD±R/RW
VCD Video CDs
CD Audio CDs
MP3 MP3 Discs
WMA WMA Discs
JPEG JPEG Discs
DivX DivX Discs

About the ✋ Symbol Display

" ✋ " may appear on your TV display during operation and indicates that the function explained in this owner's manual is not available on that specific DVD video disc.

Notes on Discs

HANDLING DISCS

Do not touch the playback side of the disc. Hold the disc by the edges so that fingerprints do not get on the surface. Never stick paper or tape on the disc.



STORING DISCS

After playing, store the disc in its case. Do not expose the disc to direct sunlight or sources of heat and never leave it in a parked car exposed to direct sunlight.

CLEANING DISCS

Fingerprints and dust on the disc can cause poor picture quality and sound distortion. Before playing, clean the disc with a clean cloth. Wipe the disc from the center out.

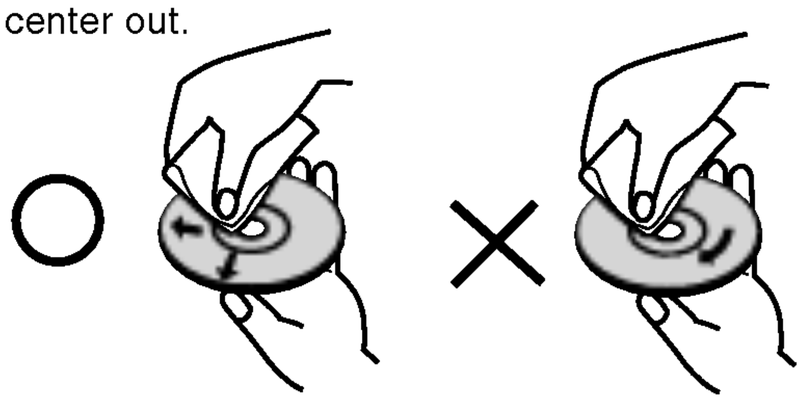

Do not use strong solvents such as alcohol, benzine, thinner, commercially available cleaners, or anti-static spray intended for older vinyl records.

Types of Playable Discs

DVD VIDEO	DVD (8 cm / 12 cm disc)
COMPACT disc DIGITAL VIDEO	Video CD (VCD) (8 cm / 12 cm disc)
COMPACT disc DIGITAL AUDIO	Audio CD (8 cm / 12 cm disc)

In addition, this unit plays DivX file, DVD -R, DVD +R, DVD -RW, DVD +RW, Kodak Picture CDs, SVCD, and CD-R / CD-RW that contains audio titles, MP3, WMA, and/or JPEG files.

Notes:

- Depending on the conditions of the recording equipment or the CD-R/RW (or DVD -R, DVD +R, DVD -RW, DVD +RW) disc itself, some CD-R/RW (or DVD -R, DVD +R, DVD -RW, DVD +RW) discs cannot be played on the unit.
- Do not attach any seal or label to either side (the labeled side or the recorded side) of a disc.
- Do not use irregularly shaped CDs (e.g., heart-shaped or octagonal) since they may result in malfunctions.

Notes on DVDs and Video CDs

Some playback operations of DVDs and Video CDs may be intentionally programmed by software manufacturers. This unit plays DVDs and Video CDs according to disc content designed by the software manufacturer, therefore some playback features may not be available or other functions may be added.

REGIONAL CODE

This DVD/CD receiver is designed and manufactured for playback of region “2” encoded DVD software. This unit can play only DVD discs labeled “2” or “ALL”.



Notes on Regional Codes

- Most DVD discs have a globe with one or more numbers in it clearly visible on the cover. This number must match your DVD/CD receiver’s regional code or the disc cannot play.
- If you try to play a DVD with a different region code from your player, the message “Check Regional Code” appears on the TV screen.

Manufactured under license from Dolby Laboratories. “Dolby”, “Pro Logic”, and the double-D symbol are trademarks of Dolby Laboratories. Confidential Unpublished works. Copyright 1992-1997 Dolby Laboratories. All rights reserved.

Manufactured under license from Digital Theater Systems, Inc. US Pat. No’s. 5,451,942; 5,956,674; 5,974,380; 5,978,762; 6,487,535 and other US and world-wide patents issued and pending. “DTS” and “DTS Digital Surround” are registered trademarks of Digital Theater Systems, Inc. Copyright 1996, 2003 Digital Theater Systems, Inc. All rights reserved.

Disc-related terms

DVD ±R / DVD ±RW
DVD -R and DVD +R are two different standards for recordable DVD drives and discs. This format allows information to be recorded onto the DVD disc only once. DVD +RW and DVD -RW are two standards for re-writable media, meaning the DVD content can be erased and re-recorded. Single-sided discs can hold 4.38 Gigabytes and double-sided discs hold twice as much. There are no dual layer single sided recordable discs.

VCD (Video CD)
A VCD holds up to 74 minutes (650 MB disc) or 80 minutes (700 MB disc) of MPEG-1 full-motion video along with quality stereo sound.

MPEG
MPEG is an international standard for video and audio compression. MPEG-1 is used in encoding video for VCD and provides for multichannel surround sound coding such as PCM, Dolby Digital, DTS and MPEG audio.

MP3
MP3 is a popular compression format used for digital audio files that yields very high near-CD quality.

WMA
Windows media audio file. A type of coding / decoding developed by Microsoft Corp.

JPEG
Joint Pictures Expert Group. JPEG is a compressed file format that allows you to save images with no limit on the number of colors.

DivX
DivX is the name of a revolutionary new video codec which is based on the new MPEG-4 compression standard for video.You will be able to play DivX movies using this DVD/CD receiver.

PBC: Playback Control (Video CD only)
Playback control is available for Video CD (VCD) version 2.0 disc formats. PBC allows you to interact with the system via menus, search functions, or other typical computer-like operations. Moreover, still pictures of high resolution can be played if they are included in the disc. Video CDs not equipped with PBC (Version 1.1) operate in the same way as audio CDs.

Title (DVD video discs only)
A title is generally a distinct section of a DVD disc. For example the main feature could be title 1, a documentary describing how the film was made could be title 2, and cast interviews could be title 3. Each title is assigned a reference number enabling you to locate it easily.

Chapter (DVD video discs only)
A chapter is a segment of a title such as a scene in a film or one interview in a series. Each chapter is assigned a chapter number, enabling you to locate the chapter you want. Depending on the disc, chapters may not be recorded.

Scene (VCD)
On a video CD with PBC (playback control) functions, moving pictures and still pictures are divided into sections called “scenes”. Each scene is displayed in the menu screen and assigned a scene number, enabling you to locate the scene you want. A scene is composed of one or several tracks.

Track
A distinct element of audiovisual information, such as the picture or sound track for a specific language (DVD), or a musical piece on a video or audio CD. Each track is assigned a track number, enabling you to locate the track you want. DVD discs allow one track of video (with multiple angles) and several tracks of audio.

Front Panel

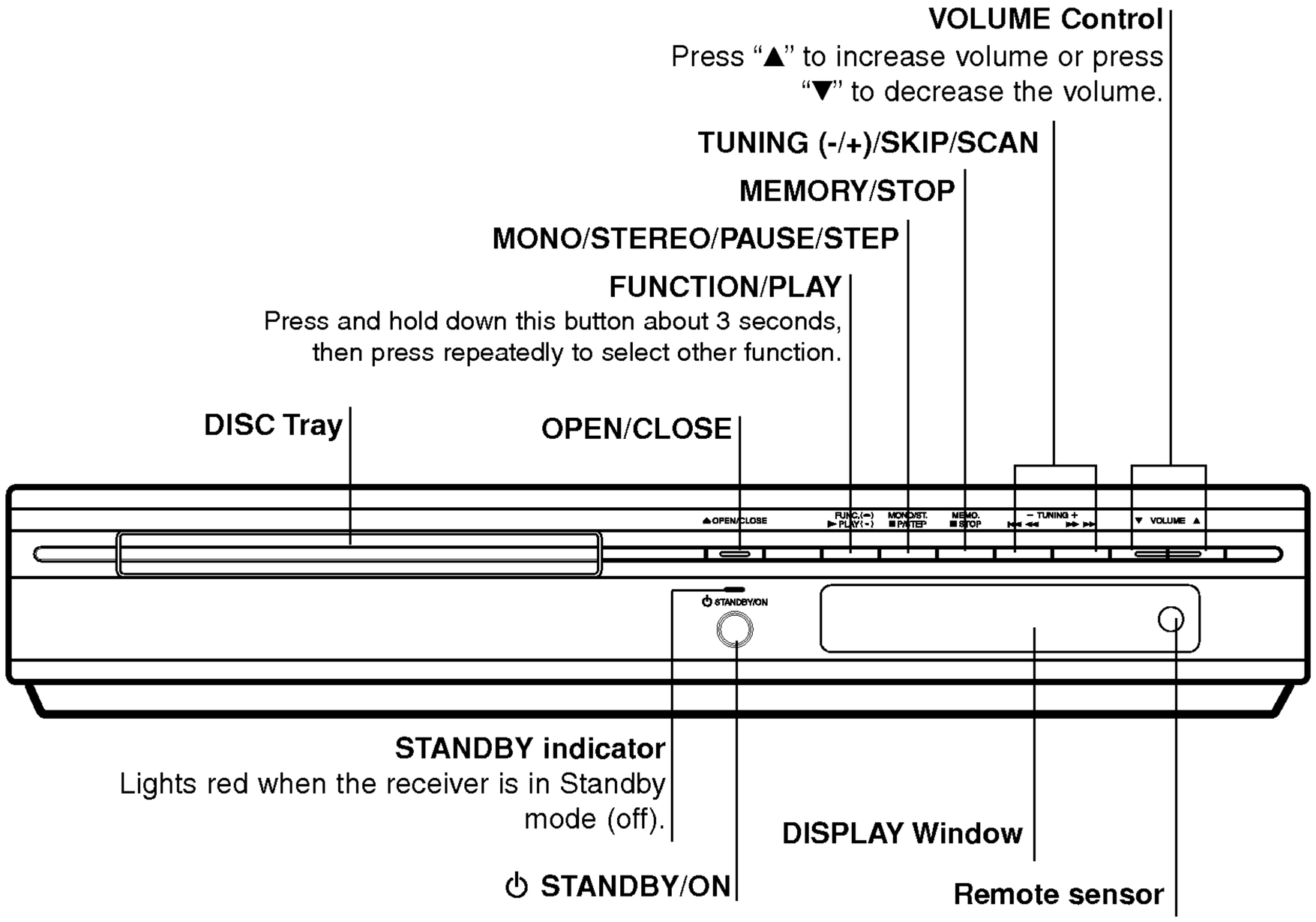

Display Window

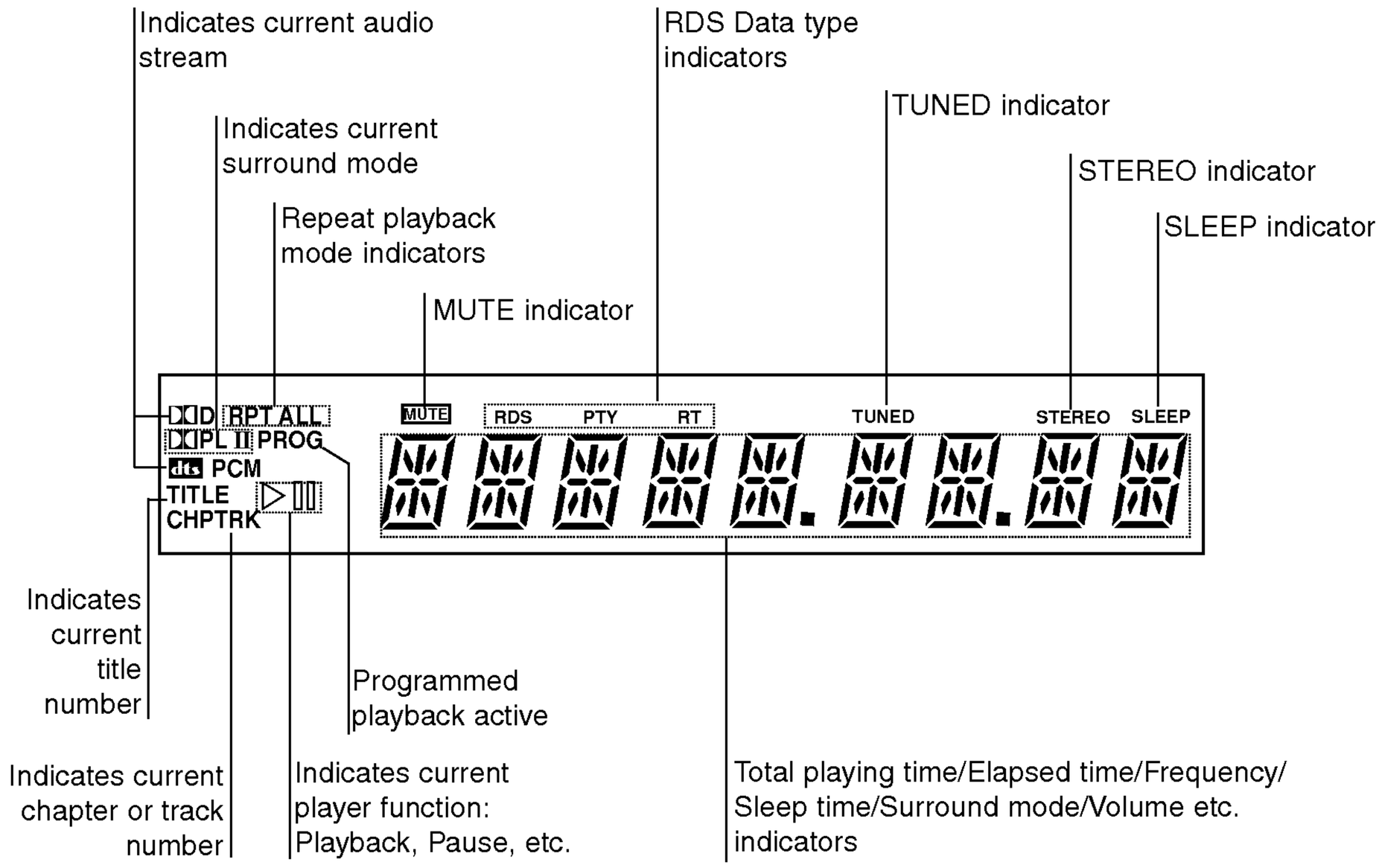

Remote Control

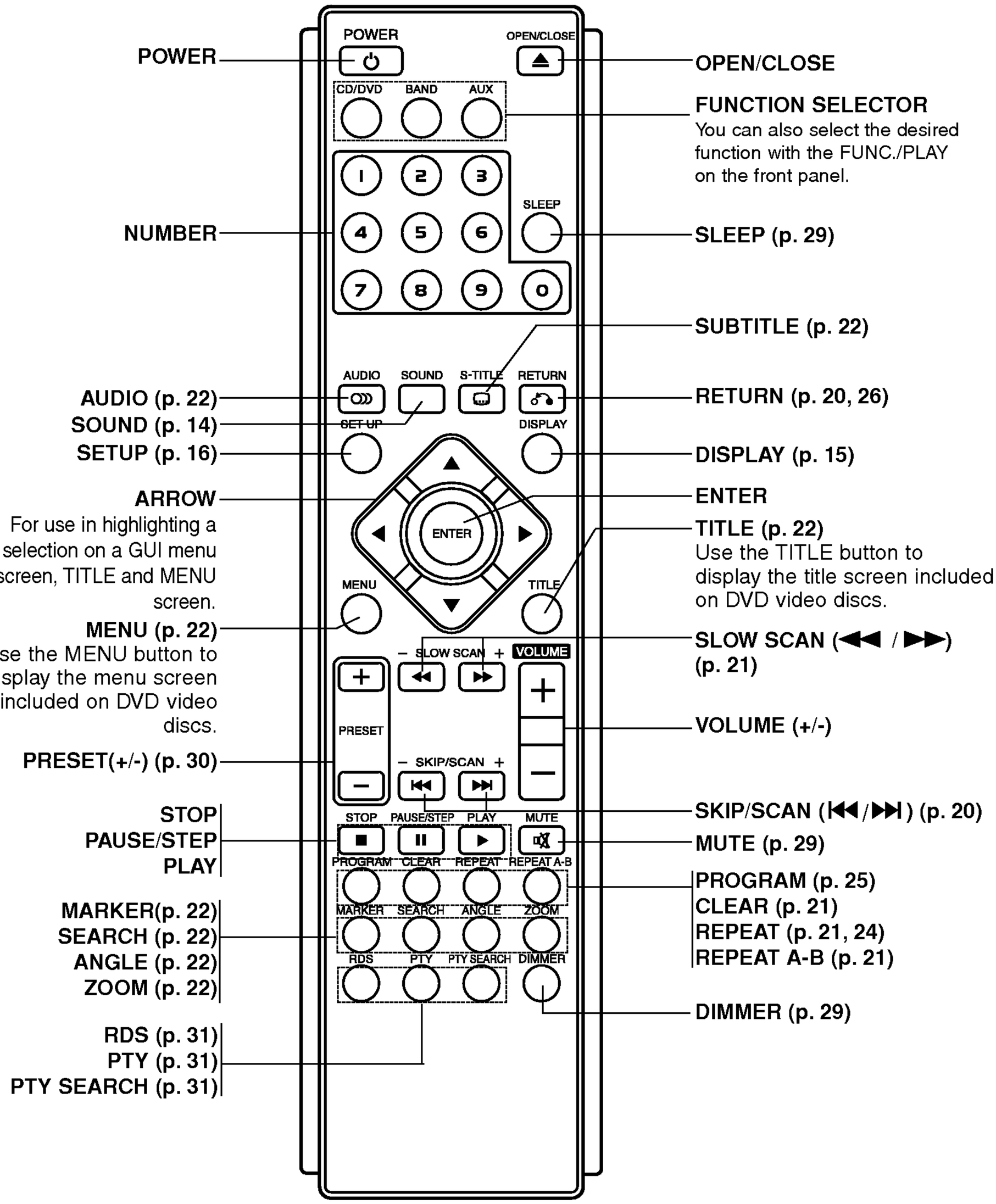

REMOTE CONTROL OPERATION RANGE

Point the remote control at the remote sensor and press the buttons.

- **Distance:** About 20 ft (6 m) from the front of the remote sensor
- **Angle:** About 30° in each direction in front of the remote sensor

REMOTE CONTROL BATTERY INSTALLATION

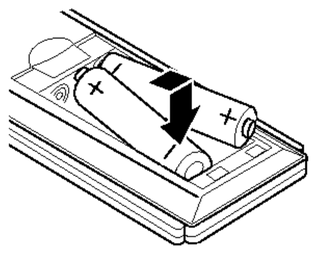

Remove the battery cover on the rear of the remote control, and insert two R03 (size AAA) batteries with ⊕ and ⊖ aligned correctly.

⚠ Caution

Do not mix old and new batteries. Never mix different types of batteries (standard, alkaline, etc.).

Rear Panel

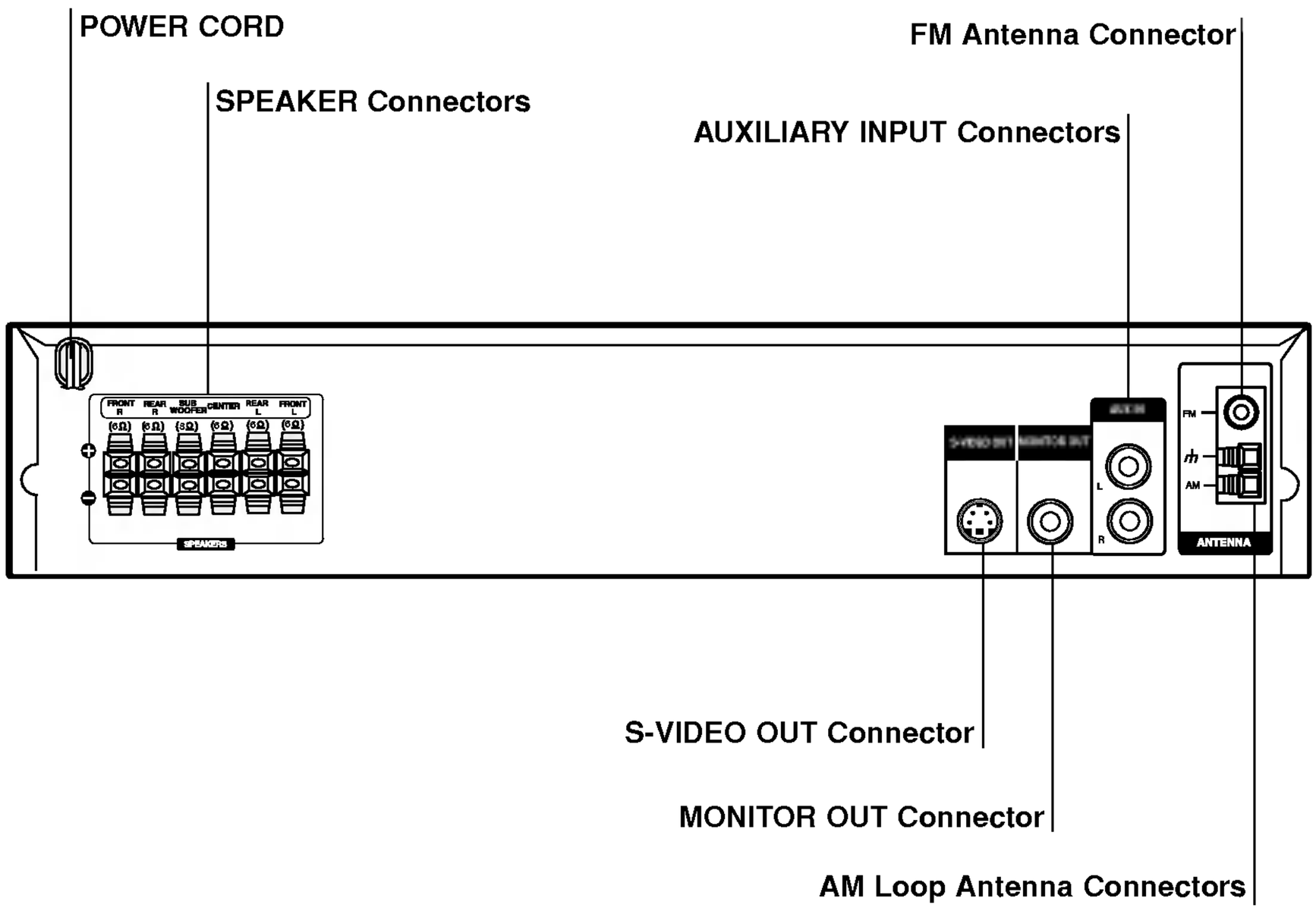

⚠

Do not touch the inner pins of the jacks on the rear panel. Electrostatic discharge may cause permanent damage to the unit.

Installation and Setup

TV Connections

Make one of the following connections, depending on the capabilities of your existing equipment.

Tips:

- Depending on your TV and other equipment you wish to connect, there are various ways you could connect the DVD/CD Receiver. Use one of the connections described below.
- Please refer to the manuals of your TV, VCR, Stereo System or other devices as necessary to make the best connections.

⚠Caution

– Make sure the DVD/CD Receiver is connected directly to the TV. Select the correct AV input on your TV.
– Do not connect your DVD/CD Receiver to TV via your VCR. The DVD image could be distorted by the copy protection system.

Video connection

Connect the MONITOR OUT jack from the DVD/CD Receiver to the VIDEO IN jack on the TV using the video cable supplied **(V)**.

S-Video connection

Connect the S-VIDEO OUT jack on the DVD/CD Receiver to the S-VIDEO IN jack on the TV using the S-Video cable **(S)**.

Tip:

If you want to connect the DVD/CD receiver to a TV with SCART socket, use the SCART-RCA adapter **(T)**.

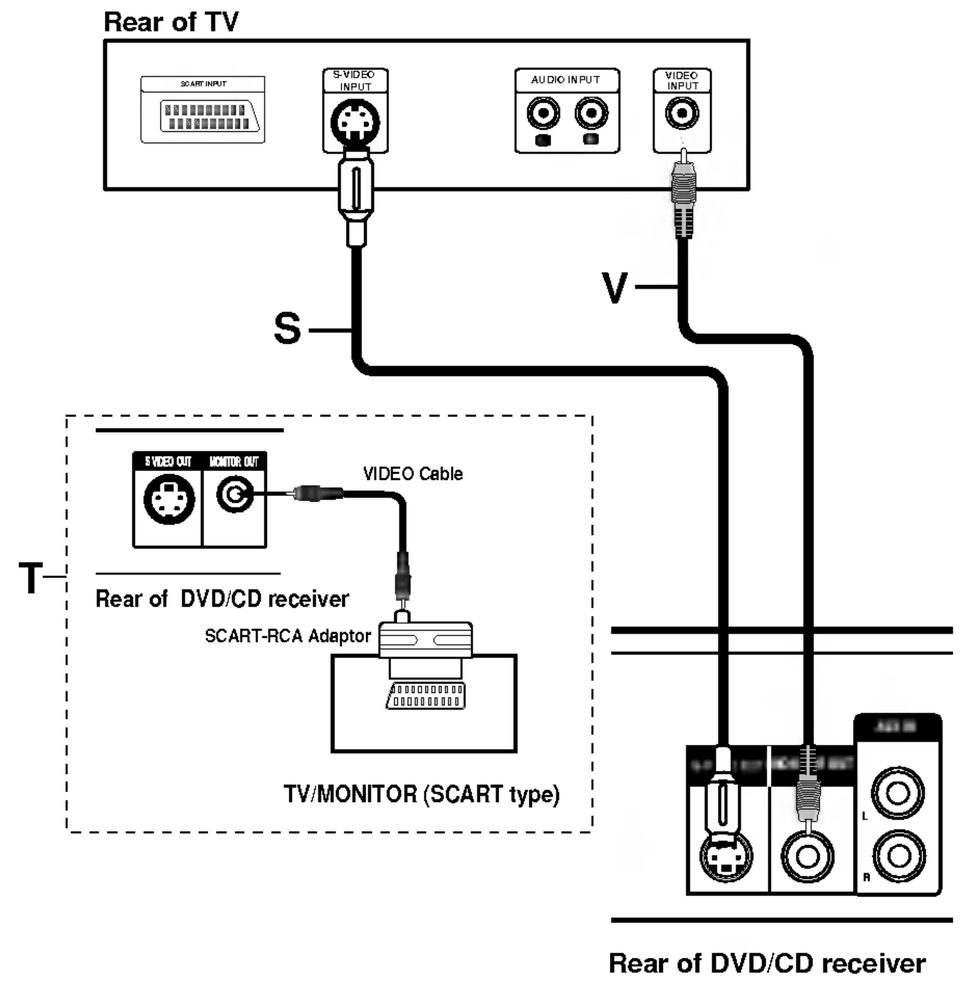

External Equipment Connections

Connection

Connect the AUX IN (L/R) jacks on the DVD/CD receiver to the AUDIO OUT (L/R) jacks on the VCR, LD player, etc using the audio cables.

Tip:

Press AUX on the remote control to select input to these jacks.
AUX appears on the Display Window.

Rear of VCR (or LD player, etc)

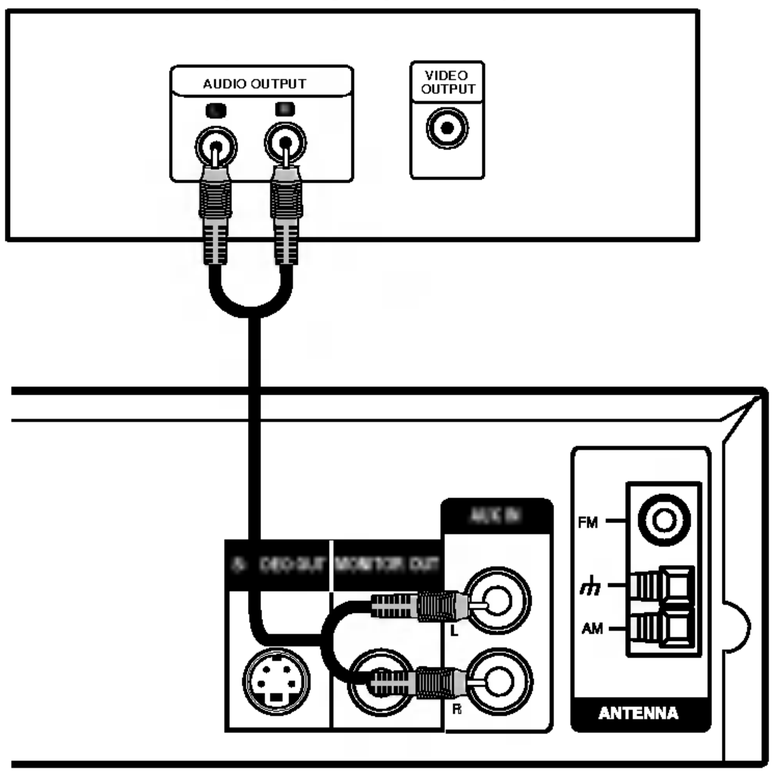

Aerial Connections

Connect the supplied FM/AM aerial for listening to the radio.

- Connect the AM loop aerial to the AM aerial connector.
- Connect he FM wire aerial to the FM aerial connector.

Notes:

- To prevent noise pickup, keep the AM loop aerial away from the DVD/CD receiver and other components.
- Be sure to fully extend the FM wire aerial.
- After connecting the FM wire aerial, keep it as horizontal as possible.

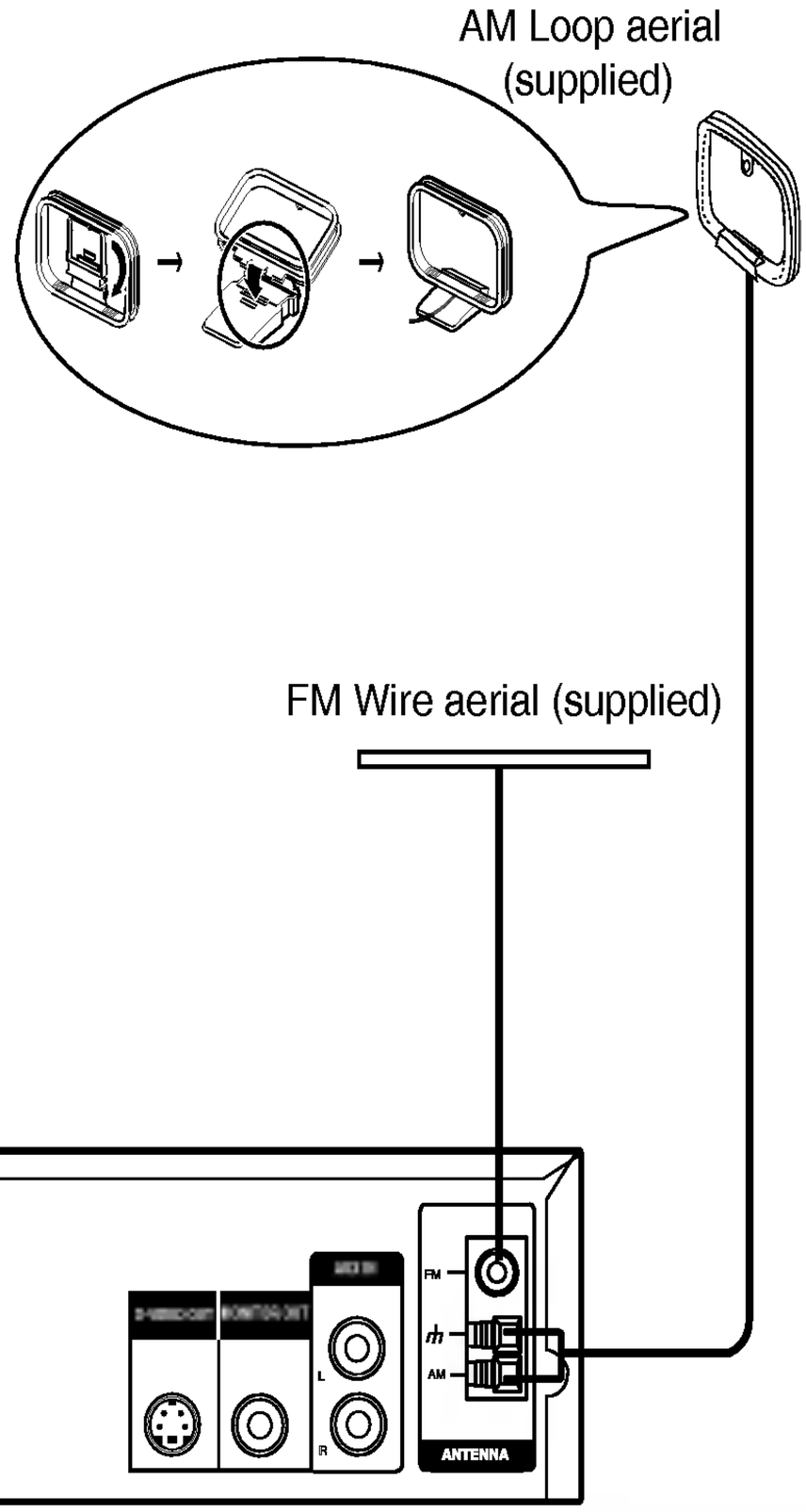

Speaker System Connection

Connect the speakers using the supplied speaker cords.

To obtain the best possible surround sound, adjust the speaker parameters (volume, distance, etc.).

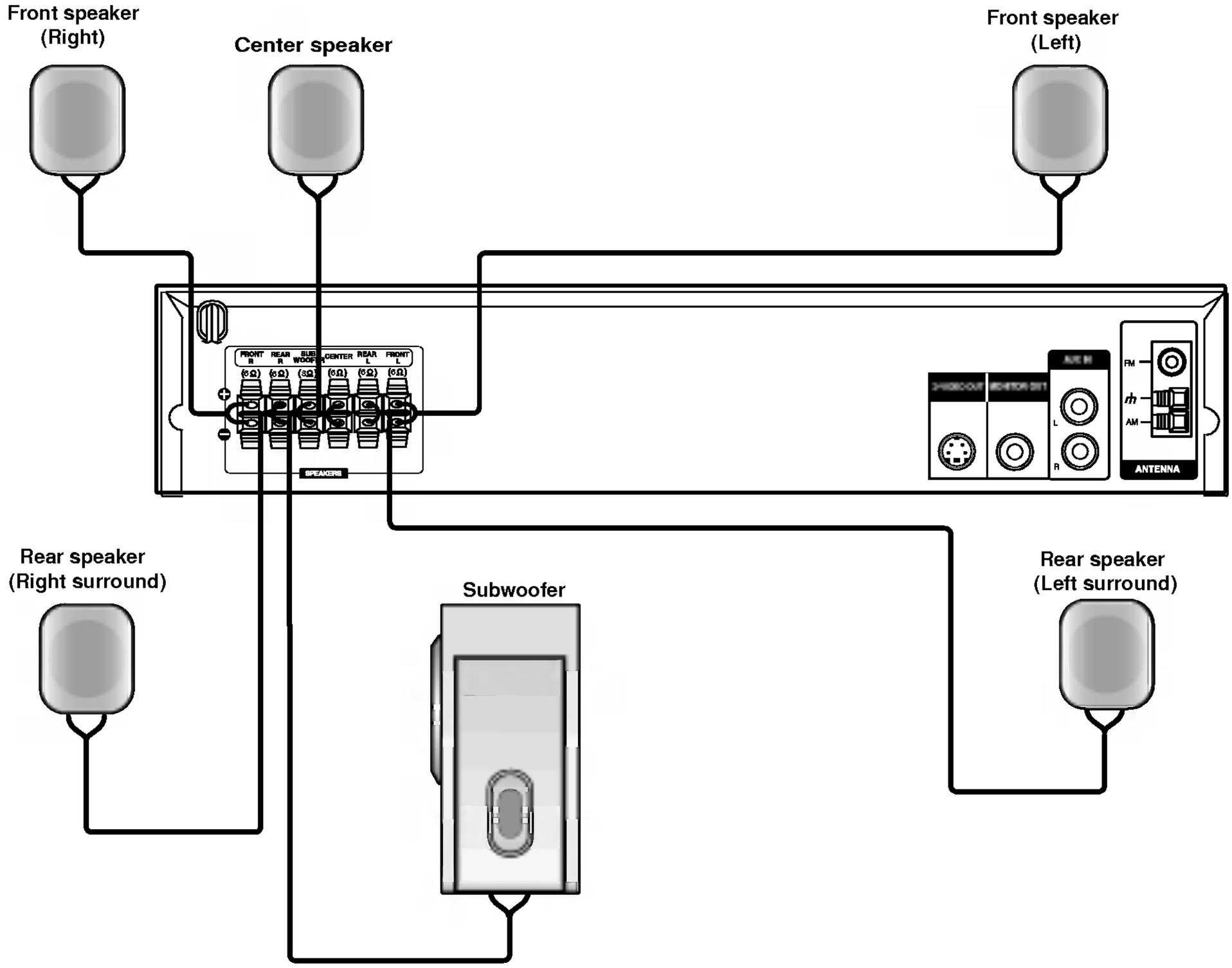

Notes:

- Be sure to match the speaker cable to the appropriate terminal on the components: + to + and – to –. If the cables are reversed, the sound will be distorted and will lack base.
- If you use front speakers with low maximum input rating, adjust the volume carefully to avoid excessive output on the speakers.

Speaker Positioning

In the case of normal position use the 6 speakers (2 front speakers, centre speaker, 2 rear speakers and subwoofer).
If you want to play the excellent bass sound, DTS digital surround or Dolby Digital surround, you should connect a subwoofer.

- **Front speakers**
  According to your listening position set up the speakers for equal distance. And by hearing position set up the interval between speakers to 45 degree.
- **Centre speaker**
  The centre speakers and front speakers are ideally the same height. But normally place it above or below the television.
- **Rear speakers**
  Place left and right behind the listening area. These speakers recreate sound motion and atmosphere required for surround sound playback. For best results, do not install the rear speakers too far behind the listening position and install them at or above the level of the listener's ears. It is also effective to direct the rear speakers towards a wall or ceiling to further disperse the sound.
  In the case of a smaller room size, if the audience is near to the rear wall set the rear speakers opposite each other, and set the rear speakers above 60 - 90 cm than the listener's ears.
- **Subwoofer**
  This can be placed in any front position.

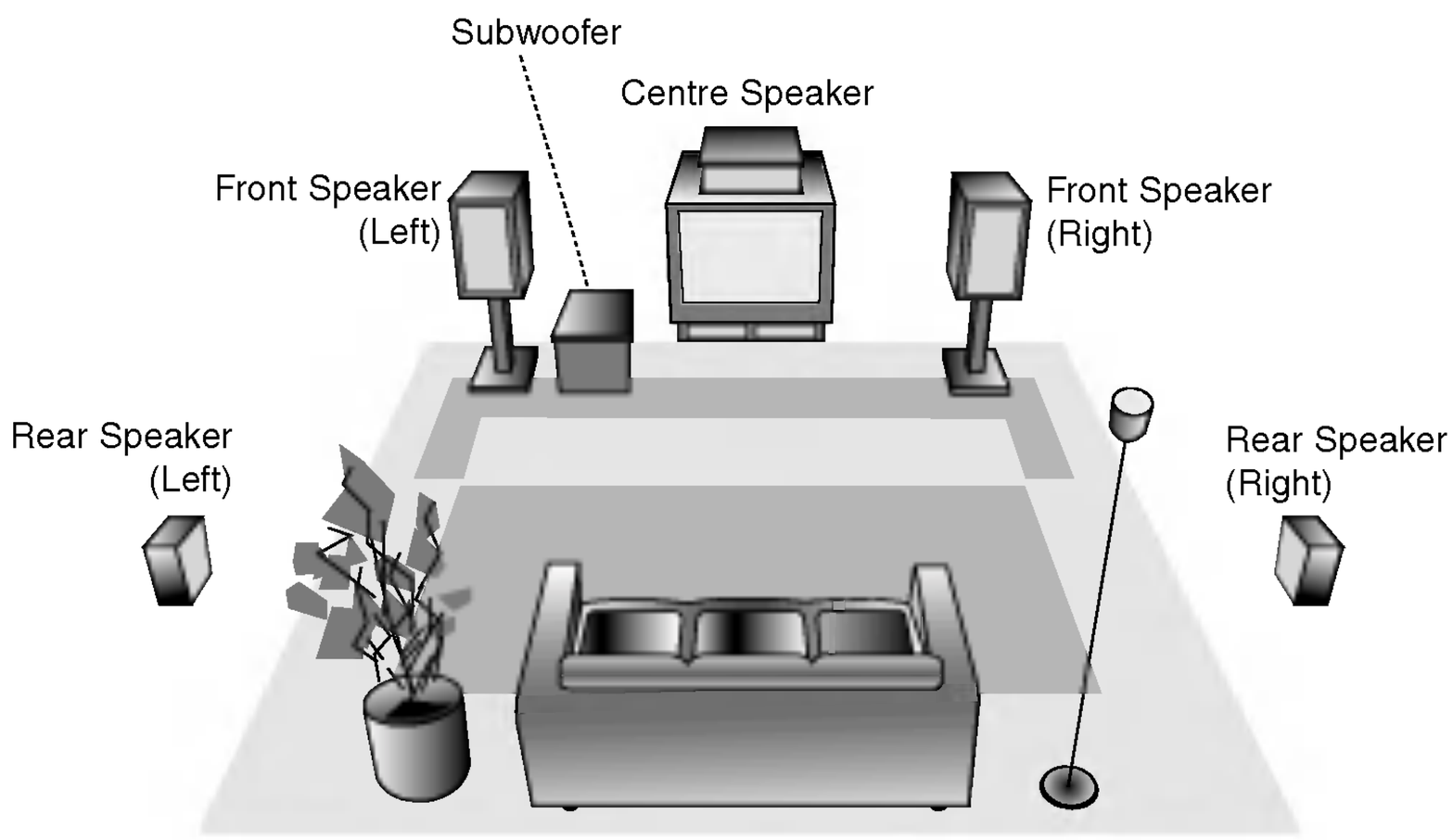

Speaker Positioning Example

Mini Glossary for Audio Stream & Surround Mode

dts

Allows you to enjoy 5.1(or 6) discrete channels of high quality digital audio from DTS program sources such as discs, DVD and compact discs, etc.bearing the trademark. DTS Digital Surround delivers up to 6 channels of transparent audio(which means identical to the original masters) and results in exceptional clarity throughout a true 360 degree sound field. The term DTS is a trademark of DTS Technology, LLC. Manufactured under license from DTS Technology, LLC.

DIGITAL

The Dolby Digital surround format lets you enjoy up to 5.1 channels of digital surround sound from a Dolby Digital program source. If you play DVDs with " DOLBY DIGITAL " mark, you can enjoy even better sound quality, greater spatial accuracy, and improved dynamic range.

PRO LOGIC

Use this mode when playing movie or Dolby Digital 2 channel which carries the " DOLBY SURROUND " mark. This mode provides the effect of being in a movie theatre or live concert house-an effect with an intensity which can only be obtained through DOLBY PRO LOGIC SURROUND. The effect of the front/back/left/right movement of the sound image, as well as the sense of fixed position in the sound image, is much clearer and more dynamic than before.

PRO LOGIC (II)

Dolby Pro Logic II creates five full-bandwidth output channels from two-channel sources. This is done using an advanced, high-purity matrix surround decoder that extracts the spatial properties of the original recording without adding any new sounds or tonal colorations.

MOVIE mode:
The Movie mode is for use with stereo television shows and all programs encoded in Dolby Surround. The result is enhanced soundfield directionality that approaches the quality of discrete 5.1-channel sound.

BYPASS

Software with multichannel surround audio signals is played according to the way it was recorded.

Sound Mode

You can enjoy surround sound simply by selecting one of the pre-programmed sound fields according to the program you want to listen to.

Each time you press **SOUND** button, the sound mode is changed in the following order;

BYPASS → STUDIO → CLUB → HALL →
THEATER 1 → CHURCH → PLII MOVIE ...
(This function available 2-channel mode only)

When DVD is inserted.

You can change the sound mode of DVD (Dolby Digital, DTS, PRO LOGIC, etc) by pressing the **AUDIO** button on the remote
during playback.
Although the DVD contents differ from disc to disc, the following explains the basic operation when this feature is used.

Each time you press **AUDIO** button, the sound mode of DVD is changed as the following order;

For your reference

- **The DVD/CD receiver memorizes the last mode settings for each source individually.**
- **You can identify the encoding format of program software by looking at its packaging.**
  - Dolby Digital discs are labeled with the DOLBY DIGITAL logo.
  - Dolby Surround encoded programs are labeled with the DOLBY SURROUND logo.
  - DTS Digital Surround discs are marked with DTS.

On-Screen Display

You can display the general playback status on the TV screen. Some items can be changed using the menu. To use the on-screen display:

1. Press DISPLAY during playback.
2. Press ▲ / ▼ to select an item. The selected item is highlighted.
3. Press ◄ / ► to change the setting. You can also use the number buttons if appropriate (e.g. inputting the title number). For some functions, press ENTER to execute the setting.

Notes:

- Some discs may not provide all of the features shown below.
- If no button is pressed for 10 seconds, the on-screen display disappears.

PLAYBACK STATUS/RESTRICTIONS



Repeat title

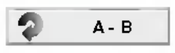

Repeat sequence



Enter a Marker


Marker Search menu

Resume play from this point

Action prohibited or not available

Example: On-Screen Display during playing DVD

Items		Selection Method
Title Number		◄ / ►, Numbers ENTER
Chapter Number		◄ / ►, Numbers ENTER
Time search		Numbers, ENTER
Audio language and Digital Audio Output mode		◄ / ► or AUDIO
Subtitle language		◄ / ► or SUBTITLE
Angle		◄ / ► or ANGLE
Sound		◄ / ►

Example: On-Screen Display during playing VCD

Items		Selection Method
Track Number (or PBC mode)		◄ / ►, Numbers ENTER
Time search		Numbers ENTER
Audio Channel		◄ / ► or AUDIO
Sound		◄ / ►

Initial Settings

By using the Setup menu, you can make various adjustments to items such as picture and sound. You can also set a language for the subtitles and the Setup menu, among other things. For details on each Setup menu item, see pages 16 to 19.

To display and exit the Menu:
Press SET UP to display the menu. A second press of SET UP will take you back to initial screen.

To go to the next level:
Press ► on the remote control.

To go back to the previous level:
Press ◄ on the remote control.

GENERAL OPERATION

1. Press SET UP. The Setup menu appears.
2. Use ▲ / ▼ to select the desired option then press ► to move to the second level. The screen shows the current setting for the selected item, as well as alternate setting(s).
3. Use ▲ / ▼ to select the second desired option then press ► to move to the third level.
4. Use ▲ / ▼ to select the desired setting then press ENTER to confirm your selection. Some items require additional steps.
5. Press SET UP or PLAY to exit the Setup menu.

LANGUAGE



OSD

Select a language for the Setup menu and on-screen display.

Disc Audio / Subtitle / Menu DVD

Select the language you prefer for the audio track (disc audio), subtitles, and the disc menu.

Original: Refers to the original language in which the disc was recorded.

Other: To select another language, press number buttons then ENTER to enter the corresponding 4-digit number according to the language code list on page 32. If you enter the wrong language code, press CLEAR.

DISPLAY



TV Aspect DVD

4:3: Select when a standard 4:3 TV is connected.

16:9: Select when a 16:9 wide TV is connected.

Display Mode DVD

Display Mode setting works only when the TV Aspect mode is set to “4:3”.

Letterbox: Displays a wide picture with bands on the upper and lower portions of the screen.

Panscan: Automatically displays the wide picture on the entire screen and cuts off the portions that do not fit.

AUDIO

Each DVD disc has a variety of audio output options. Set the receiver's AUDIO options according to the type of audio system you use.



5.1 Speaker Setup DVD DivX

Select speaker settings, including volume balance and distance, or test the speaker settings.
Speaker settings are only active on the Analog Multi-Channel Output. (See "5.1 Speaker Setup", page 19.)

Dynamic Range Control (DRC)

DVD

With the DVD format, you can hear a program's soundtrack in the most accurate and realistic presentation possible, thanks to digital audio technology. However, you may wish to compress the dynamic range of the audio output (the difference between the loudest sounds and the quietest ones). This allows you to listen to a movie at a lower volume without losing clarity of sound. Set DRC to On for this effect.

Vocal DVD

Set Vocal to On only when a multi-channel karaoke DVD is playing. The karaoke channels on the disc will mix into normal stereo sound.

LOCK (Parental Control)



Rating DVD

Some movies contain scenes that may not be suitable for children to view. Many of these discs contain parental control information that applies to the complete disc or to certain scenes on the disc. Movies and scenes are rated from 1 to 8, depending on the country. Some discs offer more suitable scenes as an alternative.

The parental control feature allows you to block access to scenes below the rating you input, thereby preventing your children from being able to view material you believe is unsuitable.

1. Select "Rating" on the LOCK menu then press ▶.
2. To access the Rating, Password and Country Code features, you must input the 4-digit security code you created. If you have not yet entered a security code you are prompted to do so.

   Input a 4-digit code and press ENTER. Enter it again and press ENTER to verify. If you make a mistake before pressing ENTER, press CLEAR.
3. Select a rating from 1 to 8 using the ▲ / ▼ buttons.

   Rating 1-8: Rating one (1) has the most restrictions and rating eight (8) is the least restrictive.

   Unlock
   If you select unlock, parental control is not active and the disc plays in full.

Notes:

If you set a rating for the receiver, all disc scenes with the same rating or lower are played. Higher rated scenes are not played unless an alternate scene is available on the disc. The alternative must have the same rating or a lower one. If no suitable alternative is found, playback stops. You must enter the 4-digit password or change the rating level in order to play the disc.

4. Press ENTER to confirm your rating selection, then press SET UP to exit the menu.

Password (Security Code)

You can enter or change password.

1. Select “Password” on the LOCK menu then press ►.
2. Follow step 2 as shown left (Rating). “Change” or “New” is highlighted.
3. Enter the new 4-digit code, then press ENTER. Input it again to verify.
4. Press SETUP to exit the menu.

If you forget your Security Code

If you forget your security code you can clear it using the following steps:

1. Press SETUP to display the Setup menu.
2. Input the 6-digit number “210499” and the security code is cleared.
3. Enter a new code as described above.

Note:

When “ INPUT PASSWD ■ ■ ■ ■ ” appears on the TV screen, press STOP and then press SET UP to move to the setup menu.

Country Code DVD

Enter the code of the country/area whose standards were used to rate the DVD video disc, based on the list on page 32.

1. Select “Country Code” on the LOCK menu then press ►.
2. Follow step 2 as shown left (Rating).
3. Select the first character using ▲ / ▼ buttons.
4. Press ENTER and select the second character using ▲ / ▼ buttons.
5. Press ENTER to confirm your country code selection.

OTHERS

The PBC and DivX(R) Registration settings can be changed.



PBC VCD

Set Playback Control (PBC) to On or Off.

On: Video CDs with PBC are played according to the PBC.

Off: Video CDs with PBC are played the same way as Audio CDs.

DivX(R) Registration DivX

You can show the DivX DRM (Digital Right Management) Registration code for your unit only.

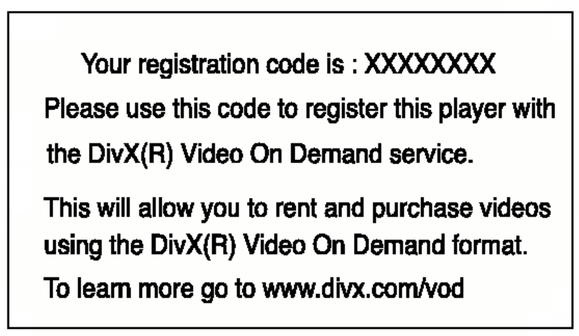

The Registration code is used for VOD (Video-On-Demand) service agent. You can purchase or rental an encrypt move file.

Notes:

If you rent the DivX VOD file, it has several options of viewing limits as show below.

- Display the number which you can watch the file.

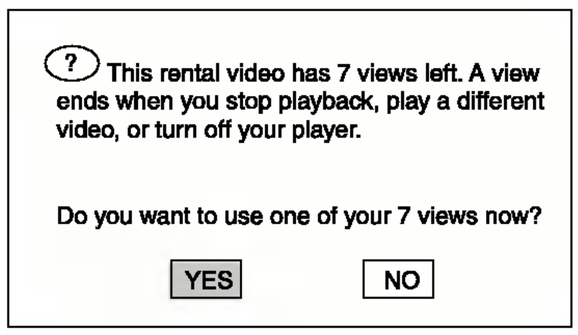

- The rental has been expired.

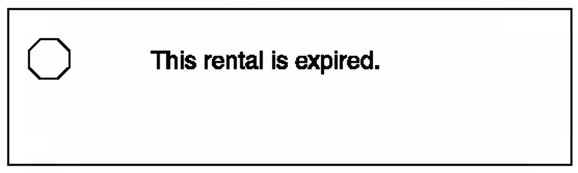

- Display the authorization error.

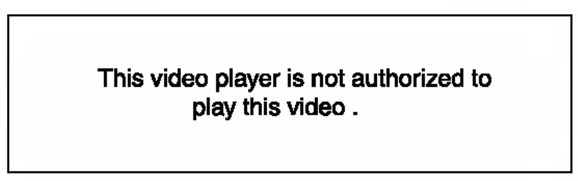

5.1 Speaker Setup

This chapter includes important reference information to help you set your DVD/CD receiver.

SPEAKER SETUP

Make the following settings for the built-in 5.1 channel surround decoder.

1. Press SETUP. The setup menu appears.
2. Use ▲ / ▼ to select the AUDIO option then press ► to move to the second level.
3. Use ▲ / ▼ to select the Speaker Setup option then press ► to move to the third level. “Select” is highlighted.
4. Press ENTER and 5.1 Speaker Setup menu appears.



5. Use ◄ / ► to select the desired speaker.
6. Adjust options using ▲ / ▼ / ◄ / ► buttons.
7. Press ENTER to confirm your selection. Returns to the previous menu.

Speaker

Select a speaker that you want to adjust. (Front speakers (Left), Front speakers (Right), Center Speaker, SubWoofer, Rear speakers (Left), or Rear speakers (Right),

Note:

Certain speaker settings are prohibited by the Dolby Digital licensing agreement.

Size

Since the speaker settings are fixed, you cannot change the settings.

Volume

Press ◄ / ► to adjust the output level of the selected speaker. (-5dB ~ +5dB)

Distance

If you connected speakers to your DVD/CD receiver, setting the Distance lets the speakers know how far the sound has to travel to reach your set listening point. This allows the sound from each speaker to reach the listener at the same time.

Press ◄ / ► to adjust the Distance of the selected speaker.

Note:

You can adjust the Distance of Center speaker and Rear speakes (Left & Right) only.

Test

Press ◄ / ► to test the signals of each speaker. Adjust the volume to match the volume of test signals memorized in the system.

Front Left (L) → Center → Front Right (R) → Rear Right (R) → Rear Left (L) → SubWoofer

Operation

Playing a DVD or Video CD

PLAYBACK SETUP

1. Press OPEN/CLOSE to open the disc tray and load your chosen disc in the tray, with the playback side down.
2. Press OPEN/CLOSE to close the tray. Playback starts automatically. If playback does not start, press PLAY.

   In some cases, the disc menu might appear instead:

   DVD

   Use the ◄ ► ▲ ▼ buttons to select the title/chapter you want to view, then press ENTER to start. Press TITLE or MENU to return to the menu screen.

   VCD

   Use the number buttons to select the track you want to view and press RETURN to return to the menu screen. Menu settings and operating procedures may differ. Follow the instructions on the each menu screen. You also may set PBC to Off (See "PBC" on page 18).

Notes:

- If parental control is set and the disc is not within the rating settings you must input the password. (See "LOCK" on page 17).
- DVDs may have a region code. Your receiver does not play discs that have a region code different from your receiver. The region code for this receiver is 2 (two).

General Features

Note:
Unless stated otherwise, all operations described use the remote control. Some features may also be available on the Setup menu.

MOVING TO ANOTHER TITLE DVD

When a disc has more than one title, you can move to another title. Press DISPLAY while playback is stopped then the appropriate number (0-9) or use ◄ / ► to move to another title.
You can play any title by inputting its number while playback is stopped.

MOVING TO ANOTHER CHAPTER/TRACK

DVD VCD DivX

When a title on a disc has more than one chapter or a disc has more than one track, you can move to another chapter/track as follows:

- Press SKIP ⏮ or ⏭ briefly during playback to select the next chapter/track or to return to the beginning of the current chapter/track.
- Press SKIP ⏮ twice briefly to step back to the previous chapter/track.
- To go directly to any chapter during DVD playback, press DISPLAY and press ▲ / ▼ to select the chapter/track icon. Then, input the chapter/track number or use ◄ / ►.

SEARCH DVD VCD DivX

1. Press and hold SKIP/SCAN ⏮ or ⏭ for about two seconds during playback.
   The receiver will now go into SEARCH mode.
2. Press and hold SKIP/SCAN ⏮ or ⏭ repeatedly to select the required speed:
   DVD; X2, X4, X8, X16 or X100
   Video CD, DivX disc; X2, X4, X8, X16
3. To exit SEARCH mode, press PLAY.

CHANGING THE AUDIO CHANNEL VCD

Press AUDIO repeatedly during playback to hear a different audio channel (Stereo, Left, or Right).

STILL PICTURE AND FRAME-BY-FRAME PLAYBACK

DVD VCD DivX

1. Press PAUSE/STEP on the remote control during playback. Advance the picture frame-by-frame by pressing PAUSE/STEP repeatedly.
2. To exit still motion mode, press PLAY.

SLOW SCAN DVD VCD

1. Press SLOW SCAN - ◄◄ or ►► + during playback.

   The DVD/CD Receiver will enter SLOW mode.

2. Use the SLOW SCAN - ◄◄ or ►► + to select the required speed: ◄❙ 1/2, ◄❙ 1/4, ◄❙ 1/8, ◄❙ 1/16 (backward), or ❙► 1/2, ❙► 1/4, ❙► 1/8, ❙► 1/16 (forward).

   With a Video CD, the Slow speed changes: ❙► 1/2, ❙► 1/4, ❙► 1/8, or ❙► 1/16 (forward).

3. To exit Slow Motion mode, press PLAY (►).

Note:

Slow motion playback in reverse is not possible with Video CDs.

REPEAT A-B DVD VCD

To repeat a sequence.

1. Press REPEAT A-B at your chosen starting point. "A-" appears briefly on the TV screen.
2. Press REPEAT A-B again at your chosen end point.
   "A-B" appears briefly on the TV screen and the repeat sequence begins.
3. Press REPEAT A-B again to cancel.

REPEAT DVD VCD DivX

You can play a title/chapter/all/track on a disc. Press REPEAT during playback to select a desired repeat mode.

DVD Video Discs - Repeat Chapter/Title/Off

- Chapter: repeats the current chapter.
- Title: repeats the current title.
- Off : does not play repeatedly.

Video CDs, DivX discs - Repeat Track/All/Off

- Track : repeats the current track
- All : repeats all the tracks on a disc.
- Off : does not play repeatedly.

Notes:

- On a Video CD with PBC, you must set PBC to Off on the setup menu to use the repeat function (See "PBC" on page 18).
- If you press SKIP (►►❙) once during Repeat Chapter (Track) playback, the repeat playback cancels.

TIME SEARCH DVD VCD

To start playing at any chosen time on the disc:

1. Press DISPLAY during playback. The time search box shows the elapsed playing time.
2. Press ▲ / ▼ to select the time clock icon and "-:--:--" appears.
3. Input the required start time in hours, minutes, and seconds from left to right. If you enter the wrong numbers, press CLEAR to remove the numbers you entered. Then input the correct numbers.
4. Press ENTER to confirm. Playback starts from the selected time.

Note:

- On a Video CD with PBC, you must set PBC to Off on the setup menu to use the Time Search function (See "PBC" on page 18).

ZOOM

Use zoom to enlarge the video image.

1. Press ZOOM during playback or still playback to activate the Zoom function. The square frame appears briefly in the right bottom of the picture.
2. Each press of the ZOOM button changes the TV screen in the sequence: 100% size → 400% size → 800% size →1600% size → 100% size
3. Use the ◄ ► ▲ ▼ buttons to move through the zoomed picture.

Note:

- Zoom may not work on some DVDs.

MARKER SEARCH DVD VCD

To enter a Marker

You can start playback from up to nine memorized points. To enter a marker, press MARKER at the desired point on the disc. The Marker icon appears on the TV screen briefly. Repeat to enter up to nine markers.

To Recall or Clear a Marked Scene

1. During disc playback, press SEARCH. The marker search menu appears on the screen.
2. Within 10 seconds, press ◄ / ► to select a marker number that you want to recall or clear.
3. Press ENTER and playback starts from the marked scene. Or, Press CLEAR and the marker number is erased from the list.
4. You can play any marker by inputting its number on the marker search menu.

PAUSE DVD VCD DivX

1. Press PAUSE/STEP during playback.
2. To return to playback, press PLAY.

Special DVD Features

CHECKING THE CONTENTS OF DVD DISCS: MENUS

DVDs may offer menus that allow you to access special features. To use the disc menu, press DVD MENU. Input the corresponding number or use the ◄ ► ▲ ▼ buttons to highlight your selection. Then press ENTER.

TITLE MENU DVD

1. Press TITLE. If the current title has a menu, the menu appears on the screen. Otherwise, the disc menu may appear.
2. The menu offers features such as camera angles, spoken language and subtitle options, and chapters for the title.
3. Press TITLE to exit.

DISC MENU DVD

Press MENU and the disc menu is displayed. Press MENU again to exit.

CAMERA ANGLE DVD

If the disc contains scenes recorded at different camera angles, you can change to a different camera angle during playback. Press ANGLE repeatedly during playback to select a desired angle. Note that the number of the current angle appears on the display.

Tip:

The angle indicator will blink on the TV screen during scenes recorded at different angles as an indication that angle switching is possible.

CHANGING THE AUDIO LANGUAGE DVD

Press AUDIO repeatedly during playback to hear a different audio language or audio track.

SUBTITLES DVD DivX

Press S-TITLE repeatedly during playback to see the different subtitle languages.

Notes:

- The subtitle file of the DivX file is displayed only smi, srt and sub.
- If there is no information or there is a code that can not read in the DivX file, “ 1/1 ” etc are displayed.

Playing an Audio CD or MP3/WMA Disc

The DVD/CD receiver can play MP3/WMA formatted recordings on CD-ROM, CD-R, or CD-RW discs.

Audio CD

Once you insert an audio CD a menu appears on the TV screen. Press ▲ / ▼ to select a track then press PLAY or ENTER and playback starts.

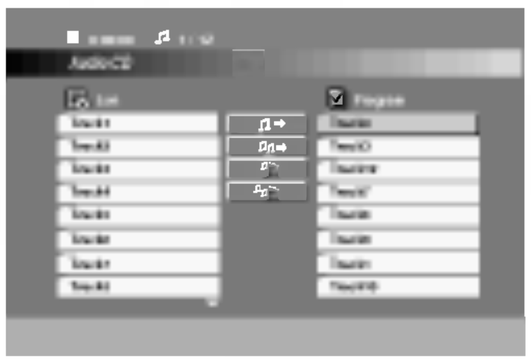

MP3 / WMA

1. Press ▲ / ▼ to select a folder, and press ENTER to see the folder contents.
2. Press ▲ / ▼ to select a track then press PLAY or ENTER. Playback starts.



Tip:

- If you are in a file list on the MP3/WMA menu and want to return to the Folder list, use the ▲ / ▼ to highlight .. and press ENTER.
- On a CD with MP3/WMA and JPEG you can switch MP3/WMA and JPEG. Press TITLE and MP3/WMA or JPEG word on top of the menu is highlighted. Then use ◄ / ► to select MP3/WMA or JPEG then press ENTER.

MP3 / WMA disc compatibility with this player is limited as follows:

- Sampling frequency: within 32 - 48 kHz (MP3), within 24 - 48kHz (WMA)
- Bit rate: within 32 - 320kbps (MP3), 40 - 192kbps (WMA)
- The player cannot read an MP3/WMA file that has a file extension other than ".mp3" / ".wma".
- CD-R physical format should be ISO 9660
- If you record MP3 / WMA files using software that cannot create a file system (eg. Direct-CD) it is impossible to playback MP3 / WMA files. We recommend that you use Easy-CD Creator, which creates an ISO 9660 file system.
- File names should have a maximum of 8 letters and must incorporate an .mp3 or .wma extension.
- They should not contain special letters such as / ? * : " < > I etc.
- The total number of files on the disc should be less than 999.

This DVD/CD receiver requires discs and recordings to meet certain technical standards in order to achieve optimal playback quality. Pre-recorded DVDs are automatically set to these standards. There are many different types of recordable disc formats (including CD-R containing MP3 or WMA files) and these require certain pre-existing conditions (see above) to ensure compatible playback.

Customers should note that permission is required in order to download MP3 / WMA files and music from the Internet. Our company has no right to grant such permission. Permission should always be sought from the copyright owner.

Audio CD and MP3 / WMA Disc Features

PAUSE CD MP3 WMA

1. Press PAUSE/STEP during playback.
2. To return to playback, press PLAY, ENTER or press PAUSE/STEP again.

MOVING TO ANOTHER TRACK CD MP3 WMA

1. Press SKIP (⏮ or ⏭) briefly during playback to go to the next track or to return to the beginning of the current track.
2. Press SKIP ⏮ twice briefly to go back to the previous track.
3. You can play any track by inputting its number.

REPEAT TRACK/ALL/OFF CD MP3 WMA

You can play a track/all on a disc.

1. Press REPEAT when playing a disc. The repeat icon appears.
2. Press REPEAT to select a desired repeat mode.

   • TRACK: repeats the current track
   • ALL: repeats all the tracks on a disc.
   • Off(No display): does not play repeatedly.

SEARCH CD MP3 WMA

1. Press and hold SKIP/SCAN ⏮ or ⏭ for about two seconds during playback.
   The receiver will now go into SEARCH mode.
2. Press and hold SKIP/SCAN ⏮ or ⏭ repeatedly to select the required speed: X2, X4, X8 backward or forward.
3. To exit SEARCH mode, press PLAY.

Programmed Playback

The program function enables you to store your favorite tracks from any disc in the receiver memory. A program can contain 300 tracks.

1. Insert a disc.
   Audio CD or MP3/WMA Discs:
   AUDIO CD or MP3/WMA menu appears.



Audio CD Menu

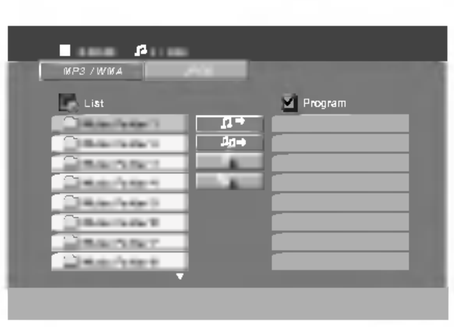

MP3/WMA Menu

2. Select a track on the "List", then press PROGRAM or select " ♫→ (Add)" icon then press ENTER to place the selected track on the "Program" list. Repeat to place additional tracks on the list.

Note:

You can add all tracks in the disc. Select " ♫♫→ (Add All)" icon then press ENTER.

3. Select the track you want to start playing on the "Program" list. Press and hold ▲ / ▼ to move to the next/previous page.
4. Press PLAY or ENTER to start. Playback begins in the order in which you programmed the tracks. Playback stops after all of the tracks on the "Program" list have played once.
5. To resume normal playback from programmed playback, select a track of AUDIO CD (or MP3/WMA) list and then press PLAY.

REPEAT PROGRAMMED TRACKS

1. Press REPEAT when playing a disc. The repeat icon appears.
2. Press REPEAT to select a desired repeat mode.
   - TRACK: repeats the current track
   - ALL: repeats all the tracks on programmed list.
   - Off(No display): does not play repeatedly.

ERASING A TRACK FROM "PROGRAM" LIST

1. Use ▲▼ to select the track that you wish to erase from the Program list.
2. Press CLEAR. Or, select " 🗑 (Delete)" icon then press ENTER to place the selected track on the Program list. Repeat to erase additional tracks on the list.

ERASING THE COMPLETE PROGRAM LIST

Use ▲ / ▼ to select " ♫🗑 (Del all)", then press ENTER.

Note:

The programs are also cleared when the disc is removed.

Viewing a JPEG Disc

Using this DVD/CD receiver you can view Kodak PICTURE CDs and discs with JPEG files.

1. Insert a disc and close the tray. The JPEG menu appears on the TV screen.



2. Press ▲ / ▼ to select a folder, and press ENTER. A list of files in the folder appears.
   If you are in a file list and want to return to the previous Folder list, use the ▲ / ▼ buttons on the remote to highlight .. and press ENTER.

3. If you want to view a particular file, press ▲ / ▼ to highlight a file and press ENTER or PLAY. While viewing a file, you can press STOP to move to the previous menu (JPEG menu).

Tip:

- There are four Slide Speed options : > (Slow), >> (Normal), >>> (Fast) and II (off). Use ▲ ▼ ◄ ► to highlight the Speed. Then, use ◄ / ► to select the option you want to use then press ENTER.
- If you set Speed option to Off, Slide is not active.

SLIDE SHOW JPEG

Use ▲ ▼ ◄ ► to highlight the (Slide Show) then press ENTER.

STILL PICTURE JPEG

1. Press PAUSE/STEP during slide show. The Receiver will now go into PAUSE mode.
2. To return to the slide show, press PLAY or press PAUSE/STEP again.

MOVING TO ANOTHER FILE JPEG

Press SKIP (⏮ or ⏭) once while viewing a picture to advance to the next or previous file.

TO ROTATE PICTURE JPEG

Press ◄ / ► during showing a picture to rotate the picture clockwise or counter clockwise.

JPEG disc compatibility with this receiver is limited as follows:

- Depending upon the size and number of JPEG files, it could take a long time for the DVD/CD receiver to read the disc's contents. If you don't see an on-screen display after several minutes, some of the files may be too large — reduce the resolution of the JPEG files to less than 2760 x 2048 pixels and burn another disc.
- The total number of files and folders on the disc should be less than 999.
- Some discs may be incompatible due to a different recording format or the condition of disc.
- Ensure that all the selected files have the ".jpg" extensions when copying into the CD layout.
- If the files have ".jpe" or ".jpeg" extensions, please rename them as ".jpg" file.
- File names without ".jpg" extension will not be able to be read by this DVD/CD receiver. Even though the files are shown as JPEG image files in Windows Explorer.

Maintenance and Service

Refer to the information in this chapter before contacting a service technician.

HANDLING THE UNIT

When shipping the unit

Please save the original shipping carton and packing materials. If you need to ship the unit, for maximum protection, re-pack the unit as it was originally packed at the factory.

Keeping the exterior surfaces clean

- Do not use volatile liquids such as insecticide spray near the unit.
- Do not leave rubber or plastic products in contact with the unit for a long period of time. since they leave marks on the surface.

Cleaning the unit

To clean the player, use a soft, dry cloth. If the surfaces are extremely dirty, use a soft cloth lightly moistened with a mild detergent solution.

Do not use strong solvents such as alcohol, benzine, or thinner, as these might damage the surface of the unit.

Maintaining the Unit

The DVD/CD receiver is a high-tech, precision device. If the optical pick-up lens and disc drive parts are dirty or worn, the picture quality could be diminished.

Depending on the operating environment, regular inspection and maintenance are recommended after every 1,000 hours of use.

For details, please contact your nearest authorized service center.

Playing a DivX Movie Disc

Using this DVD/CD receiver you can play DivX disc.

1. Insert a disc and close the tray. The DivX menu appears on the TV screen.

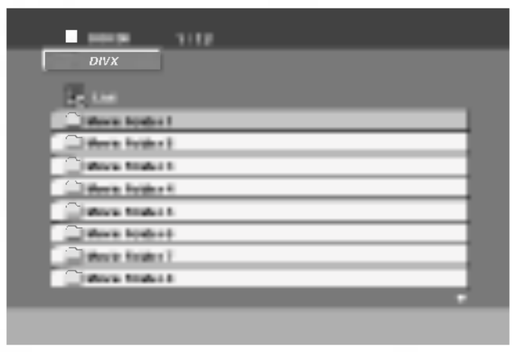

2. Press ▲ / ▼ to select a folder, and press ENTER. A list of files in the folder appears. If you are in a file list and want to return to the Folder list, use the ▲ / ▼ buttons on the remote to highlight .. and press ENTER.

3. If you want to view a particular file, press ▲ / ▼ to highlight a file and press ENTER or PLAY.

4. Press STOP to exit.

DivX disc compatibility with this player is limited as follows:

- Available resolution size of the DivX file is under 720x576 (W x H) pixel.
- The file name of the DivX subtitle is available by 20~40 characters (different by language).
- If there is impossible code to express in the DivX file, it may be displayed as " _ " mark on the display.
- **If the number of the screen frame is over 30 per 1 second, this unit may not operate normally.**
- **If the video and audio structure of recorded file is not interleaved, either video or audio is outputted.**
- **If the file is recorded with GMC, the unit supports some of 1-point of the record level.**
  * GMC?
  GMC is the acronym for Global Motion Compensation. It is an encoding tool specified in MPEG4 standard. Some MPEG4 encoders, like DivX or Xvid, have this option. There are different levels of GMC encoding, usually called 1-point, 2-point, or 3-point GMC.

Playable DivX file

● ".avi ", ".mpg ", ".mpeg "

Playable Codec format

● "DIVX3.xx ", "DIVX4.xx ", "DIVX5.xx ", "XVID ", "MP43 ", "3IVX ", "MP42 ".

Playable Audio format

● "AC3 ", "DTS ", "PCM ", "MP3 ", "WMA ".
  • Sampling frequency: within 32 - 48 kHz (MP3), within 24 - 48kHz (WMA)
  • Bit rate: within 8 - 320kbps (MP3), 32 - 192kbps (WMA)

Additional Features

LAST SCENE MEMORY

DVD

This receiver memorizes last scene from the last disc that is viewed. The last scene remains in memory even if you remove the disc from the receiver or switch off the receiver. If you load a disc that has the scene memorized, the scene is automatically recalled.

Note:

This receiver does not memorize the scene of a disc if you switch off the receiver before commencing to play the disc.

SYSTEM SELECT

You must select the appropriate system mode for your TV system. If NO DISC appears in the display window, press and hold PAUSE/STEP on the front panel or remote control for more than 5 seconds to be able to select a system (PAL, NTSC, or AUTO).

- When the selected system does not coincide with the system of your TV, normal colour picture may not be displayed.

AUTO: Select when DVD/CD Receiver is connected with Multi system TV.

NTSC: Select when DVD/CD Receiver is connected with NTSC-TV.

PAL: Select when DVD/CD Receiver is connected with PAL-TV.

SLEEP TIMER SETTING

You can set the DVD/CD Receiver to turn off automatically at a specified time.

1. **Press SLEEP to set the desired sleep time.**
   The SLEEP indicator and sleep time appears in the display window.
2. **Each time you press SLEEP the setting changes in the following order.**
   SLEEP 180 →150 →120→90 →80 → 70 → 60→ 50 → 40 → 30 → 20 →10 →OFF

Note:

- You can check the time remaining before the DVD/CD receiver turns off.
  Press SLEEP. The remaining time appears in the display window.

DIMMER

This function will change the brightness of the display window on the front panel during in power-on status.

Press the DIMMER repeatedly.

MUTE

Press MUTE to mute your unit.

You can mute your unit in order, for example, to answer the telephone, “MUTE” indicator flashes in the display window.

Presetting the Radio Stations

You can preset 50 stations for FM and AM (MW). Before tuning, make sure that you have turned down the volume.

1. Press BAND on the remote control until FM or AM (MW) appears in the display window.
2. And then every time you press BAND, FM and AM (MW) changes alternately.
3. Press and hold TUNING ⏮ ◀◀ or ▶▶ ⏭ on the front panel for about two seconds until the frequency indication starts to change, then release.
   Scanning stops when the DVD/CD Receiver tunes in a station. "TUNED" and "ST." (for stereo program) appear in the display window.
4. Press MEMO./STOP on the front panel.
   A preset number will flash in the display window.
5. Press TUNING ⏮ ◀◀ or ▶▶ ⏭ on the front panel to select the preset number you want.
6. Press MEMO./STOP on the front panel again.
   The station is stored.
7. Repeat steps 3 to 6 to store other stations.

To tune in a station with a weak signal

Press TUNING ⏮ ◀◀ or ▶▶ ⏭ repeatedly in step 3 to tune in the station manually.

To clear all the stored stations

Press and hold MEMO./STOP for about two seconds and "CLEAR ALL" is appeared in the display window and then press MEMO./STOP again, the stations are cleared.

- If you have accidentally entered into the "CLEAR ALL" mode and you do not wish to clear the memory, do not press any key. After a few seconds, the "CLEAR ALL" display will go off by itself and change to normal mode.

Note:

If all stations have already been entered, the FULL message will appear in the display window for a moment and then a preset number will flash. To change the preset number, follow the steps 5-6 as above.

Listening to the Radio

Preset radio stations in the DVD/CD Receiver's memory first (see "Presetting radio stations" on the left).

1. Press BAND until AM (MW) or FM appears in the display window.
   The last received station is tuned in.
2. Press PRESET +/- repeatedly on the remote control to select the preset station you want.
   Each time you press the button, the DVD/CD Receiver tunes in one preset station at a time.
3. Adjust the volume by rotating VOLUME on the front panel or by pressing VOLUME + or - on the remote control repeatedly.

To turn off the radio

Press POWER to turn the DVD/CD receiver off or select another function mode (CD/DVD or AUX).

To listen to non-preset radio stations

- Use manual or automatic tuning in step 2.
- For manual tuning, press TUNING ⏮ ◀◀ **or** ▶▶ ⏭ on the front panel repeatedly.
- For automatic tuning, press and hold TUNING ⏮ ◀◀ **or** ▶▶ ⏭ for about two seconds on the front panel.

To select a preset radio station directly

You can use the number buttons on the remote control to select a preset radio station directly.
For example, to listen to preset station 4, press 4 on the remote control. To listen to preset station 19, press 1 then 9 (within 3 seconds).

For your reference

- **If an FM program is noisy**
  Press MONO/ST. on the front panel so that "STEREO" disappears in the display window. There will be no stereo effect, but the reception will improve. Press the button again to restore the stereo effect.
- **To improve reception**
  Reorient the supplied antennas.

RDS Operation

This unit is equipped with RDS (Radio Data System), which brings a wide range of information to FM radio. Now in use in many countries, RDS is a system for transmitting station call signs or network information, a description of station programme type text message about the station or specifics of musical selection and the correct time.

RDS TUNING

When a FM station is tuned in and it contains RDS data, the unit will automatically display the station's call sign and the RDS indicator will light in the Display Window as well as indicators for the RDS services programme (PS), programme type recognition (PTY), Radiotext (RT) and Clock Time (CT) if transmitted by the station.

RDS DISPLAY OPTIONS

The RDS system is capable of transmitting a wide variety of information in addition to the initial call sign that appears when a station is first tuned. In normal RDS operation the display will indicate the station name, broadcast network or call letters. Pressing **RDS** on the remote control enables you to cycle through the various data types in the sequence:

(PS ↔ FREQUENCY ↔ PTY ↔ RT ↔ CT)

- **PS (Programme Service name)-** The name of the channel is shown in the Display Window.
- **PTY (Programme type recognition)-** The name of the programme type is shown in the Display Window.
- **RT (Radiotext)-** A "text" message contains special information from the broadcast station. Note that this message may scroll across the display to permit message.
- **CT (Time controlled by the channel)-** Enables the unit to receive the actual time and show it in the Display Window.

Note:

- Some RDS stations may not choose to include some of these additional features. If the data required for the selected mode is not being transmitted, the Display Window will show a **PTY NONE, RT NONE, CT NONE, PS NONE** message.

Programme Search (PTY)

A major benefit of RDS is its ability to encode broadcasts with Programme Type (PTY) codes that indicate the type of material being broadcast. The following list shows the abbreviations used to indicate each PTY along with an explanation of the PTY.

NEWS	News
AFFAIRS	Current Affairs
INFO	Information
SPORT	Sports
EDUCATE	Educational
DRAMA	Drama
CULTURE	Culture
SCIENCE	Science
VARIED	Varied Speech Programme
POP M	Popular Music
ROCK M	Rock Music
EASY M	Easy Listening Music
LIGHT M	Light Music
CLASSICS	Classical Music
OTHER M	Other Music
WEATHER	Weather Information
FINANCE	Financial Programmes
CHILDREN	Children's Programmes
SOCIAL	Social Affairs Programmes
RELIGION	Religious Broadcasts
PHONE IN	Phone-In Programmes
TRAVEL	Travel and Touring
LEISURE	Leisure and Hobby
JAZZ	Jazz Music
COUNTRY	Country Music
NATION M	National Music
OLDIES	Oldies Music
FOLK M	Folk Music
DOCUMENT	Documentary Programmes
TEST	Station Alarm Test Message
ALARM 1	Emergency Broadcast Information

You may search for a specific Programme Type (PTY) by following these steps:

1. Press BAND to select FM mode.
2. Press PTY on the remote control, the display will show the last PTY in use.
3. Press PTY repeatedly to select a desired PTY.
4. When the PTY is selected, press PTY SEARCH.
   The unit will go into an automatic search mode.
   When a station is tuned, the search will stop.

Language Codes

Use this list to input your desired language for the following initial settings:
Disc Audio, Disc Subtitle, Disc Menu.

Language	Code	Language	Code	Language	Code	Language	Code
Abkhazian	6566	Fiji	7074	Lingala	7678	Singhalese	8373
Afar	6565	Finnish	7073	Lithuanian	7684	Slovak	8375
Afrikaans	6570	French	7082	Macedonian	7775	Slovenian	8376
Albanian	8381	Galician	7176	Malagasy	7771	Somali	8379
Ameharic	6577	Georgian	7565	Malay	7783	Spanish	6983
Arabic	6582	German	6869	Malayalam	7776	Sudanese	8385
Armenian	7289	Greek	6976	Maltese	7784	Swahili	8387
Assamese	6583	Greenlandic	7576	Maori	7773	Swedish	8386
Azerbaijani	6590	Guarani	7178	Marathi	7782	Tagalog	8476
Bashkir	6665	Gujarati	7185	Moldavian	7779	Tajik	8471
Basque	6985	Hausa	7265	Mongolian	7778	Tamil	8465
Bengali; Bangla	6678	Hebrew	7387	Nauru	7865	Tatar	8484
Bhutani	6890	Hindi	7273	Nepali	7869	Telugu	8469
Bihari	6672	Hungarian	7285	Norwegian	7879	Thai	8472
Breton	6682	Icelandic	7383	Oriya	7982	Tibetan	6679
Bulgarian	6671	Indonesian	7378	Panjabi	8065	Tigrinya	8473
Burmese	7789	Interlingua	7365	Pashto, Pushto	8083	Tonga	8479
Byelorussian	6669	Irish	7165	Persian	7065	Turkish	8482
Cambodian	7577	Italian	7384	Polish	8076	Turkmen	8475
Catalan	6765	Japanese	7465	Portuguese	8084	Twi	8487
Chinese	9072	Javanese	7487	Quechua	8185	Ukrainian	8575
Corsican	6779	Kannada	7578	Rhaeto-Romance	8277	Urdu	8582
Croatian	7282	Kashmiri	7583	Rumanian	8279	Uzbek	8590
Czech	6783	Kazakh	7575	Russian	8285	Vietnamese	8673
Danish	6865	Kirghiz	7589	Samoan	8377	Volapük	8679
Dutch	7876	Korean	7579	Sanskrit	8365	Welsh	6789
English	6978	Kurdish	7585	Scots Gaelic	7168	Wolof	8779
Esperanto	6979	Laothian	7679	Serbian	8382	Xhosa	8872
Estonian	6984	Latin	7665	Serbo-Croatian	8372	Yiddish	7473
Faroese	7079	Latvian, Lettish	7686	Shona	8378	Yoruba	8979
				Sindhi	8368	Zulu	9085

Country Codes

Choose a country code from this list.

Country	Code	Country	Code	Country	Code	Country	Code
Afghanistan	AF	Ethiopia	ET	Malaysia	MY	Saudi Arabia	SA
Argentina	AR	Fiji	FJ	Maldives	MV	Senegal	SN
Australia	AU	Finland	FI	Mexico	MX	Singapore	SG
Austria	AT	France	FR	Monaco	MC	Slovak Republic	SK
Belgium	BE	Germany	DE	Mongolia	MN	Slovenia	SI
Bhutan	BT	Great Britain	GB	Morocco	MA	South Africa	ZA
Bolivia	BO	Greece	GR	Nepal	NP	South Korea	KR
Brazil	BR	Greenland	GL	Netherlands	NL	Spain	ES
Cambodia	KH	Islands	HM	Netherlands Antilles	AN	Sri Lanka	LK
Canada	CA	Hong Kong	HK	New Zealand	NZ	Sweden	SE
Chile	CL	Hungary	HU	Nigeria	NG	Switzerland	CH
China	CN	India	IN	Norway	NO	Taiwan	TW
Colombia	CO	Indonesia	ID	Oman	OM	Thailand	TH
Congo	CG	Israel	IL	Pakistan	PK	Turkey	TR
Costa Rica	CR	Italy	IT	Panama	PA	Uganda	UG
Croatia	HR	Jamaica	JM	Paraguay	PY	Ukraine	UA
Czech Republic	CZ	Japan	JP	Philippines	PH	United States	US
Denmark	DK	Kenya	KE	Poland	PL	Uruguay	UY
Ecuador	EC	Kuwait	KW	Portugal	PT	Uzbekistan	UZ
Egypt	EG	Libya	LY	Romania	RO	Vietnam	VN
El Salvador	SV	Luxembourg	LU	Russian Federation	RU	Zimbabwe	ZW

Troubleshooting

Check the following guide for the possible cause of a problem before contacting service.

Symptom	Cause	Correction
No power.	• The power cord is disconnected.	• Plug the power cord securely into the wall outlet.
The power is on, but the DVD/CD Receiver does not work.	• No disc is inserted.	• Insert a disc. (Check that the DVD or, audio CD indicator in the DVD display is lit.)
No picture.	• The TV is not set to receive DVD signal output.	• Select the appropriate video input mode on the TV so the picture from the DVD/CD Receiver appears on the TV screen.
	• The video cable is not connected securely.	• Connect the video cable into the jacks securely.
	• The connected TV power is turned off.	• Turn on the TV.
There is no sound or only a very low-level sound is heard.	• The equipment connected with the audio cable is not set to receive DVD signal output.	• Select the correct input mode of the audio receiver so you can hear the sound from the DVD/CD Receiver.
	• The audio cables are not connected securely.	• Connect the audio cable into the jacks securely.
	• The power of the equipment connected with the audio cable is turned off.	• Turn on the equipment connected with the audio cable.
	• The audio connecting cable is damaged.	• Replace it with new one.
The playback picture is poor.	• The disc is dirty.	• Clean the disc.
The DVD/CD Receiver does not start playback.	• No disc is inserted.	• Insert a disc. (Check that the DVD, or audio CD indicator in the DVD display is lit.)
	• An unplayable disc is inserted.	• Insert a playable disc. (Check the disc type, colour system and Regional code.)
	• The disc is placed upside down.	• Place the disc with the playback side down.
	• The disc is not placed within the guide.	• Place the disc on the disc tray correctly inside the guide.
	• The disc is dirty.	• Clean the disc.
	• A menu is on the TV screen.	• Press the SET UP button to turn off the menu screen.
	• The Rating level is set.	• Cancel the Rating function or change the rating level.
Loud hum or noise is heard.	• The disc is dirty.	• Clean the disc.
	• The speakers and components are connected poorly.	• Connect the speakers and components securely.
	• The DVD/CD Receiver is located too close to the TV.	• Move your TV away from the audio components.

Symptom	Cause	Correction
Radio stations cannot be tuned in.	• The antenna is positioned or connected poorly.	• Connect the antenna securely.
		• Adjust the antennas and connect an external antenna if necessary.
	• The signal strength of the stations is too weak (when tuning in with automatic tuning).	• Tune in the station manually.
	• No stations have been preset or preset stations have been cleared (when tuning by scanning preset stations).	• Preset the stations (page 30).
The remote control does not work properly.	• The remote control is not pointed at the remote sensor of the DVD/CD Receiver.	• Point the remote control at the remote sensor of the DVD/CD Receiver.
	• The remote control is too far from the DVD/CD Receiver.	• Use the remote control within about 20 ft (6 m).
	• There is an obstacle in the path of the remote control and the DVD/CD Receiver.	• Remove the obstacle.
	• The batteries in the remote control are flat.	• Replace the batteries with new ones.
The front panel display is too dim.	• Nothing is displayed on the front panel display.	• Press DIMMER on the remote control.

Specifications

General		Power supply	Refer to main label
		Power consumption	Refer to main label
		Mass	3.8 kg
		External dimensions (W x H x D)	360 x 75 x 314 mm
		Operating conditions	Temperature: 5°C to 35°C, Operation status: Horizontal
		Operating humidity	5% to 85%
CD/DVD		Laser	Semiconductor laser, wavelength 650 nm
		Signal system	PAL 625/50, NTSC 525/60
		Frequency response (audio)	200 Hz to 18 kHz
		Signal-to-noise ratio (audio)	More than 70 dB (1 kHz, NOP, 20 kHz LPF/A-Filter)
		Dynamic range (audio)	More than 70 dB
		Harmonic distortion (audio)	1.0 % (1 kHz, at 12W position) (20 kHz LPF/A-Filter)
Video		Video output	1.0 V (p-p), 75 Ω, negative sync., RCA jack
		S-video output	(Y) 1.0 V (p-p), 75 Ω, negative sync., Mini DIN 4-pin x 1 (C) 0.3 V (p-p), 75 Ω
Tuner	FM	Tuning Range	87.5 - 108.0 MHz or 65.0 - 74.0 MHz, 87.5 - 108.0 MHz
		Intermediate Frequency	10.7 MHz
		Signal-to Noise Ratio	55 dB (Mono)
		Frequency Response	180 - 10,000 Hz
	AM [MW]	Tuning Range	522 - 1,611 kHz or 530 - 1,610 kHz
		Intermediate Frequency	450 kHz
Amplifier		Stereo mode	25W + 25W (6 Ω at 1 kHz, THD 10 %)
		Surround mode **(* Depending on the sound mode settings and the source, there may be no sound output.)**	Front: 25W + 25W (THD 10 %) Centre*: 25W Surround*: 25W + 25W (6Ω at 1 kHz, THD 10 %) Subwoofer*: 60W (8Ω at 70 Hz, THD 10 %)
		Outputs	S-VIDEO MONITOR

Speakers	Satellite Speaker	Passive Subwoofer
Type	1 Way 1 Speaker	1 Way 1 Speaker
Impedance	6 Ω	8 Ω
Frequency Response	130 - 20,000 Hz	50 - 1,500 Hz
Sound Pressure Level	85 dB/W (1m)	82 dB/W (1m)
Rated Input Power	25W	60W
Max. Input Power	50W	120W
Net Dimensions (W x H x D)	89 x 89 x 90 mm	170 x 350 x 333 mm
Net Weight	0.4 kg	4.3 kg

Supplied Accessories

- Speakers 6
- Remote control 1
- AM loop antenna 1
- Speaker cables 5
- Batteries (AAA) 2
- FM antenna 1

* **Designs and specifications are subject to change without notice.**



P/N: 3834RH0057N